SYSTEM A - 100

Owner's Manual

as of July 2009

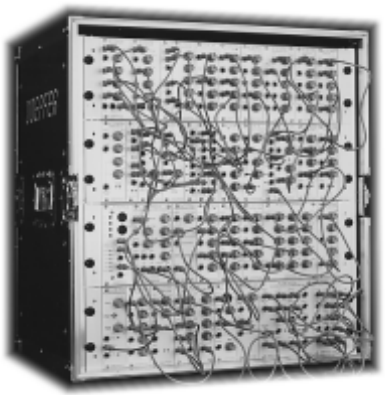

DOEPFER MUSIKELEKTRONIK GMBH

Warning:

Inside the A-100 power supply are dangerous voltages. It is essential to take careful note of the following safety instructions:

- Before opening up the case or moving a module or blanking panel, **always take the mains power supply plug out**. This applies equally to removing or replacing any panel or module.
- All empty spaces in the rack must be filled with blanking panels.
- Before use, the top and bottom covers must also be properly fixed in place. If modules are permanently fixed (eg. built into a 19" rack case) then the top of the highest of the rack systems and the bottom of the lowest must have their covers properly fitted.

The instrument must never be operated outdoors but only in dry, closed rooms. Never use the instrument in a humid or wet environment nor near inflammables.

Important safety notes.

Whenever electrical equipment is used, several basic precautions need to be taken, including the following:

- Before using any part of the instrument, read the instructions and notes carefully.
- The instrument may only be used for the purpose described in this operating manual. Due to safety reasons, the instrument must never be used for other purposes not described in this manual. If you are not sure about the intended purpose of the instrument please contact an expert.
- The instrument may only be operated with the voltage written on the power input on the rear panel.
- Before opening the case disconnect the power plug.
- All eventual modifications must only be carried out by a qualified person who will follow the valid safety instructions. Every modification should becarried out only at the manufacturer or an authorized service company. Any modification not released by the manufacturer leads to the extinction of the operation permission.
- The instrument must never be operated outdoors but only in dry, closed rooms. Never use the instru-

ment in a humid or wet environment nor near inflammables.
- Do not use this instrument in damp environments, or close to water.
- No liquids or conducting materials must get into the instrument. If this should happen the instrument must be disconnected from power immediately and be examined, cleaned and eventually be repaired by a qualified person
- Do not use this instrument in close proximity to heat sources such as radiators or ovens. Don't leave it in direct sunlight.
- This instrument must be assembled or installed in a 19" rack in a way that guarantees sufficient ventilation and air circulation.
- The instrument must not be exposed to temperatures above 50°C or below -10 °C. In use, the instrument must be at a minimum temperature of 10 °C.
- Keep the top side of the instrument free in order to guarantee proper ventilation, otherwise the instrument could be overheated. Never place heavy objects on the instrument.
- This instrument can, without any external amplification or in combination with a headphone or speaker amplifier, produce sound levels which can damage your hearing. Don't work at high sound levels for prolonged periods of time, and don't ever use levels which cause discomfort.
- The instrument's mains power supply lead should be disconnected if it is not used for any substantial period. If there is any damage the cables must be repaired or replaced by an authorized person
- Do not tread on the mains supply lead.
- In disconnecting the lead, pull the plug, not the cable.
- If this instrument is connected to others, check in their manuals for connection instructions.
- Make particularly sure that no object falls into the instrument, and that no liquid gets into it.
- Transport the instrument carefully, never let it fall or overturn. Make sure that during transport and in use the instrument has a proper stand and does not fall, slip or turn over because persons could be injured
- The instrument must be checked and serviced by a qualified technician in the following cases:
  a. the power supply lead or connector is damaged in any way,
  b. an object or fluid has somehow got into the instrument,
  c. the instrument was exposed to rain,
  d. the instrument stops working properly or starts to behave erratically,
  e. the instrument is knocked over or dropped and/ or its case is damaged.
- As stated above, there are no user-serviceable parts in the instrument. Refer all repairs to qualified service personnel.

Contents

Important safety notes ii
Contents iv
About this manual v
Introduction vi

1. Important notes 1
1.1 Connecting to the electricity supply 1
1.2 Installation 1
1.3 Care and maintenance 1

2. Overall design 3
2.1 Introduction 3
2.2 Installing modules 4
2.3 Interconnecting modules 6

3. Signal flow in the A-100 7
3.1 The principles of voltage control 7
3.2 Signals in the A-100 8
3.3 The System Bus in the A-100 9
3.4 Integrating the A-100 with MIDI 11

4. A-100 BS Basic Systems 13

5. Accessories 15

6. Items included as standard 17

7. Further reading 19

8. Module overview 21

9. Appendix 29
9.1 Adding a 5 V power supply 29
9.2 Installing the AD5 low-cost 5V adaptor 31
9.3 Using the Mini power supply/bus 33

10. Using the modules

☞ Because the A-100 is a modular system, each module has its own separate manual, which can be inserted into this ring-binder.

About this manual

This user manual describes the A-100 modular synthesizer system, and explains how to use each section of it.

If this is your first time using the A-100, please make sure you are familiar with all the safety instructions (eg. pages ii - iv) and important notes (chapter 1).

Because of the modular nature of the A-100, this manual is also designed to be modular.

Chapter 2 (Overall design) describes the physical make-up of the system - and particularly how to install the individual modules into the 19" rack.

Chapter 3 (The A-100 signal flow) details the A-100's signal path: the basic principles of voltage control, how to bring MIDI into the equation, and the possibilities for voltage-controlled modulation.

Chapter 4 describes the **A-100 Basic System**.
Chapter 5 details **accessories**.
Chapter 6 explains the **standard items included**.
Chapter 7 suggests **further reading**.

Chapter 8 (Module overview) gives a run-down of the individual modules presently available, and an idea of their potential uses.

Chapter 9 (Appendix) deals with installing an extra 5V power supply, for modules such as the A-190 and A-191.

Detailed descriptions of the **individual modules** follow, in **self-contained chapters,** with descriptions, user examples, and patching aids. When buying individual modules, the relevant manual chapters which are included should be inserted into this ring binder.

In the manual, you'll find various symbols used:

⚠ important user and safety advice

☞ note

① ... diagram numbering of module controls

❶ ... diagram numbering of module in / outputs

❒ next step in a list of instructions

 practical hint or tip

Introduction

In the A-100, Doepfer have produced a capable and versatile analog modular synthesizer, built in the style of the classic modular systems of the seventies.

The renaissance of analog synthesis in the last few years shows that analog sound production has a vital place alongside sampling and digital synthesis, and can produce sounds that are unobtainable by any other means. In addition to the unique sounds of its oscillators, filters, amplifiers, phasers, frequency shifters, wave-modifiers, different control sources, and so on, analog synthesis can provide almost unbounded modulation opportunities, conventional and unconventional - limited only by the number and variety of modules available.

In designing the A-100, our priorities were: good sound quality; ease of integration into a MIDI system; diversity of modules available; and, maybe most important of all, affordability.

Of course, a modular system doesn't just have advantages. Creative work with an audio construction kit like this takes time and practice, especially to start with.

Anyone who wants to be able to check out all its available sounds at the press of a button will be very disappointed with a modular system. Each unique sound has to be puzzled out, and may never be exactly repeated.

Nor are there any fixed rules for connecting the various modules. A modular is an open system, in which practically anything is possible, and that's where the fun really starts. Diversity and experimentation - and sometimes lateral thinking - are the keys to its power.

Although the user manuals for each module are very comprehensive, they can't substitute entirely for a general overview and knowledge of analog synthesis. Some very good specialised books have been written on the subject, and although some may be out of print, it's crucial to find one or two of them, and learn from them. With that, the whole world of modular systems will open up to you, and you'll suddenly appreciate their fascination and sheer sonic power.

We hope your A-100 brings you serious pleasure!

July, 2009

DOEPFER MUSIKELEKTRONIK GMBH

1. Important information

⚠ **As well as the important safety notice (see ii - iii) please also read and take note of the following points.**

1.1 Connecting to the electricity supply

- The system A-100 must only be connected to the mains voltage that is specified at the back of the A-100 frame (220 V to 240 V / 50 Hz or 110 to 120 V / 60 Hz).
- If the fuse has to be replaced only the type of fuse specified at the back of the A-100 frame is allowed. If another fuse is used the warranty is void and the A-100 may be damaged. The fuse is located at the mains inlet on the back of the A-100 frame (exception: suitcase version with mains inlet at the front). To replace the fuse one has to disconnect the mains cable and remove the fuse holder (e.g. with the aid of a screw driver). The fuse holder is a small black plastic part that is inserted into the mains inlet.
- Do not connect the A-100 to a socket or outlet which is also being used by equipment such as electric motors, lighting dimmers, etc, which can cause interference. Use a separate outlet for the A-100.

1.2 Installation

- Do not expose the A-100 to rain or moisture.
- Operation is allowed only in a dry environment in a closed room but not in the open country.
- The installation near a large amplifier or other equipment which uses powerful mains transformers may cause hum.
- Do not install the A-100 in close proximity to equipment which produces an electromagnetic field (monitors, computers, etc.), to avoid the possibility of mutual interference.
- Use in a dusty environment should be avoided.

1.3 Care and maintenance

- Apart from cleaning the instrument, no other user-maintenance is recommended, of the modules or system busses. Internal maintenance should be carried out only by qualified technicians (see pages ii - iii: "**Important safety notice**").
- For regular cleaning, use a soft, dry, or slightly damp cloth. To remove dirt, if necessary, use a cloth slightly moistened with a very diluted mild detergent. This should be more than sufficient to clean the instrument. Never use solvents like petrol, alcohol, or thinners.

Fuse values for different mains voltages and power supplies		
	Type of power supply	
Mains voltage	**A-100NT12 (standard power supply, 650 mA output current)**	**A-100PSU2 (power supply with ring core/toroid transformer and 1.2A output current)**
115V	250 mA time lag (slow blow)	630 - 800 mA time lag (slow blow)
230V	125 mA time lag (slow blow)	315 - 400 mA time lag (slow blow)

2. Overall design

2.1 Introduction

The A-100 modular system is based on a standard **19" rack system A-100 G** into which individual **Modules** can be fitted in any chosen layout.

The **rack system** (see Fig. 1) conforms to the 19" standard, and consists of two sections each 3U high, tied together by 6U side panels. It contains two system busses (①), the internal power supply (②) , and the main electrical supply socket (③).

Module **front panels** are all 3U high. Their width is measured in HP (1 HP = 5.08 mm). The rack system has a **usable width** of **84 HP** (see Fig. 1). If the modules you install don't use up the entire 84 HP, then you must cover up the spaces with **blanking panels**.

In each rack system there are two system bus bars (one for each section), to each of which up to 14 modules can be connected, using ribbon cable. The bus bar serves to supply power to the modules, and also to send control voltages etc. to some of the modules (see Chapter 3).

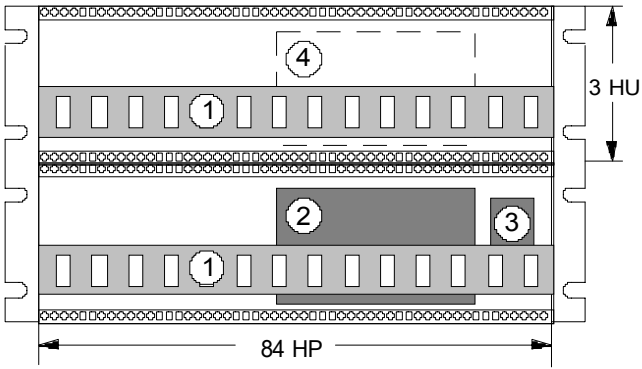

Fig. 1: A look inside the A-100 G rack system

The rack system power supply produces voltages of +12 V and -12 V and can put out a **maximum current of 650 mA**. In setting up a modular system, make sure that the total current required by all the modules doesn't exceed this maximum. If it does, then a second power supply (see Accessories) will need to be installed (at position ④, Fig.1). As a rule, though, one power supply should be sufficient for a rack system.

2.2 Installing modules

Important:

***Before* you install a module into the rack system:**

- ❒ Calculate the total **current requirement** of **existing modules** plus the **new module/s.**
- ❒ Check that this total is **less than 1200 mA**.
- ❒ If it is, the existing power supply is fine.
- ❒ But if the **total current requirement** is **more than 1200 mA**, you must install a second power supply (see Accessories) before installing the module/s. Follow the installation notes that come with the second power supply.

☞ Ignoring this warning can result in damage to your system, and will void your guarantee!

Once you've checked that there is sufficient current in reserve for the extra module/s, there's nothing to stop you going ahead and installing them. Read on!

- ❒ First of all, take the A-100's plug out of the wall socket.
- ❒ Plug the supplied **ribbon cable** into the module's **bus socket** (see ① in Fig. 2). As a rule, the cable is 16-way, but some modules only have a 10-way cable. Look carefully at the cable, and then press the appropriate connector onto the module's bus pins (see ② in Fig. 2).

  ⚠ Check very carefully that it is connected so that the coloured marking on the ribbon cable is at the bottom of the module's connector (see ③ in Fig. 2), and that the connection is perfect, and **pushed fully home, not at a slight angle.** Failure to check this may result in the module's instant destruction as soon as the power is turned back on.

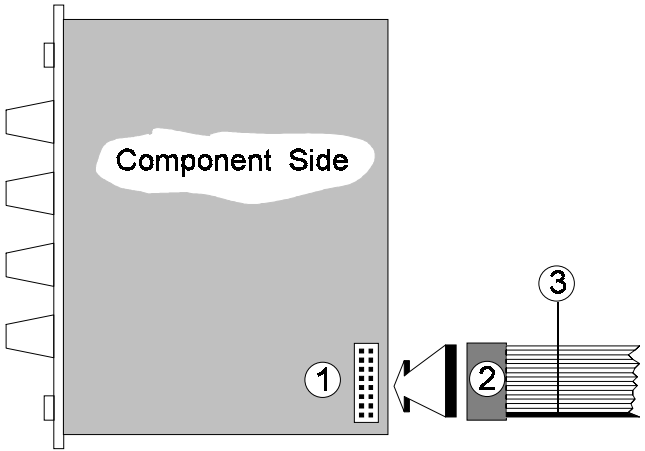

Fig. 2: Connecting the ribbon cable to the module

❒ Now join the free end of the ribbon cable (see ② in Fig. 3) to the nearest available position on the system bus board (see ① in Fig. 3).

⚠ Check very carefully that it is connected so that the coloured marking on the ribbon cable is at the bottom of the bus connector (see ③ in Fig. 3), and it is **pushed fully home, not at a slight angle.** Failure to check this may result in the module's instant destruction as soon as the power is turned back on!

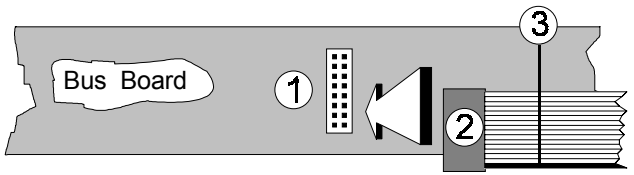

Fig. 3: Connecting the ribbon cable to the bus board.

☞ When you're installing extra modules, it may be necessary to take another module or two out, to allow you easier access to the bus board.

❒ Place the module carefully into the space in the rack, and fasten it firmly in place with the supplied screws. Put back any covers or blanking plates, and screw them in firmly.

❒ Now plug the system A-100 back into the main power supply, and switch it on.

❒ Test out the newly installed module.

If it doesn't seem to be working as expected, **immediately** disconnect the system from the power supply again.

In this case, double-check the connections, making completely sure that the ribbon cable is the right way round where it connects to the module and the bus.

Once your system is assembled and operational, you should make use of the the **patch sheets** which come with each module.

Photocopy the patch sheets for each of your modules, cut these out, and stick them onto a sheet of paper in the order in which they occur in your system (see Fig. 4). Then photocopy this sheet, and use the copies to note down good settings and patches.

2.3 Interconnecting modules

For connecting modules to each other, you need **mono mini-jack (Ø 3.5 mm) patch leads**. You can obtain patch leads from us (see Accessories in chapter 5) in different lengths.

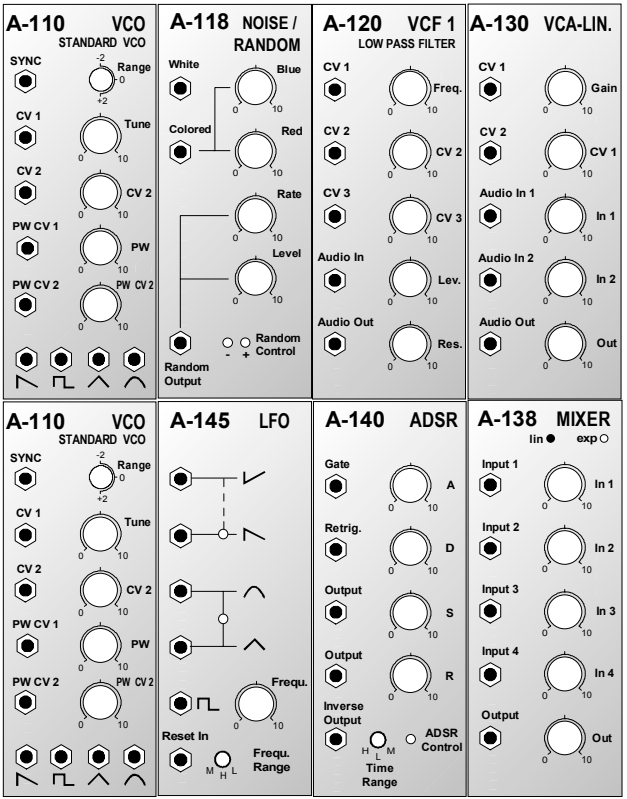

Fig. 4: Example of a personal patch sheet.

3. Signal flow in the A-100

3.1 The Principles of Voltage Control

What makes analogue synthesizers (and modular systems in particular) special is that the important parameters of the sound sources (VCO, noise, etc.) and modifiers (VCF, VCA, etc.) can be altered not just by hand, but by **voltage control**.

This principle was turned into reality by the “father of the analogue synthesizer”, Robert Moog, who produced the first commercially available synthesizer in the sixties. It gives vast flexibility and the potential to make sounds that have never been made before.

Fig. 5 shows the principle of voltage control, with examples of control voltages affecting a filter (VCF) and an oscillator (VCO).

In the case of the **VCF,** the parameter which is being voltage-controlled is the **Cut-Off Frequency f_c**. The amount of control voltage input present changes the cut-off frequency, and thus the frequency of the signal that the VCF lets through - see the shaded area in the diagram.

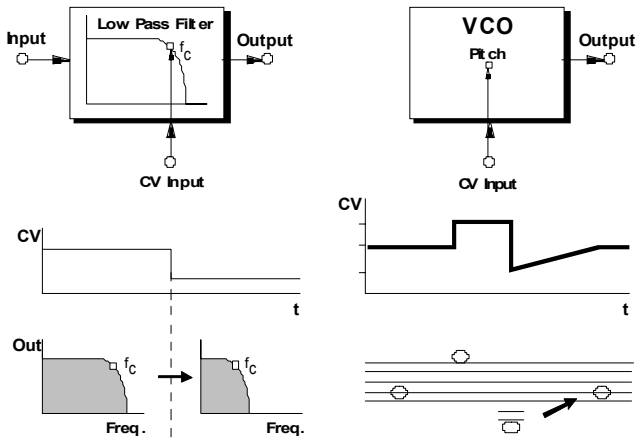

Fig. 5: The principles of voltage control

In the case of the **VCO**, it’s the **pitch** which is controlled by a voltage: an increase of 1 volt corresponds to an increase of one octave in the pitch.

With a sudden change of voltage, the pitch changes suddenly, while with a smoother, continuous change, portamento is created.

As well as modules which can be affected by voltage control, there are other modules like the ADSR and LFO which themselves produce voltages to control other modules.

Usually, these modules need a **Trigger Signal** to bring them into action. For instance, a **GATE Signal**, corresponding to a key being pressed on a keyboard, can set off an ADSR, which then puts out its variable voltage **"envelope"** to affect other modules (see Fig. 6).

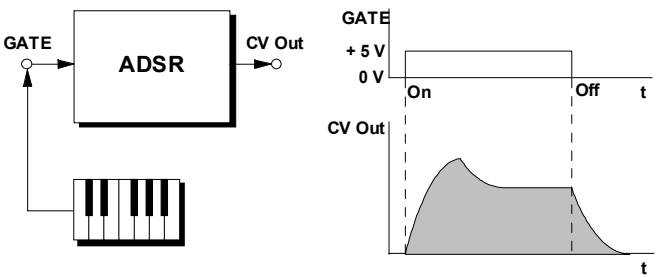

Fig. 6: The envelope generated by an ADSR

3.2 Signals in the A-100

In the System A-100 there are three types of signal:

- Audio Signals
- Control voltages
- Trigger voltages

Audio Signals are produced by the sound source Modules (such as VCO or NOISE), and lie in the range from -5 V to +5 V (10 V_{SS}). The System A-100 can also let you use **external** Audio Signals (e.g. Microphone, Electric Guitar, Keyboard).

☞ To interface satisfactorily, the level of **external Audio Signals** must be brought up to the A-100's operating level.
Module **A-119 (External Input)**, is ideal for this job, having among other things an internal pre-amp, and two inputs of different sensitivity.

Control voltages, as produced by modulation sources like the LFO and ADSR, are typically from -2.5 V to +2.5 V (5 V_{SS}) for the LFO, and from 0 V to +8 V for the ADSR.

Trigger or Gate Signals, which start a process or function, are typically from 0 V to +5V or 0V to +12 V, with the trigger occurring as the **leading edge** of the waveform shoots up from 0 V to +5V/12 V. The A-100 modules usually output +12V, but the corresponding inputs of A-100 modules (e.g. Gate, Clock, Reset) will also work with lower levels (typ. +5V).

These definitions of the various signals, and the distinctions between them - sound sources and modulation sources - are right in principle, but a modular system like the A-100 often makes a mockery of them. In a modular set-up, all of the modules produce voltages, and can be used as control voltages or triggers, thus blurring the distinction between the various types.

For example, the output from an LFO can be used as an audio signal, as a control voltage for a VCF or VCA, or as a trigger signals for a sequence.

It's just about true to say that anything can be modulated by anything else, so that a modular system gives the musician extraordinary flexibility and individuality.

3.3 The System Bus in the A-100

The A-100's **System Bus** supplies power to the modules. It also carries the internal control system (**INT.GATE** and **INT.CV)**, which some of the modules (such as the VCO A-110, or ADSR A-140) can tap into. You can choose whether these modules receive these signals, by altering an internal jumper.

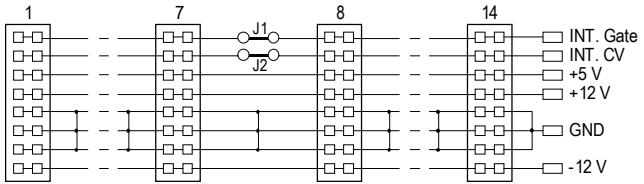

Fig. 7: The A-100 system bus

If you use the **A-190** MIDI-/CV-Interface in your system, when you press a key on your MIDI keyboard, the gate and CV1 signals from the A-190 will be sent via the INT.GATE and INT.CV to all modules on the bus.
The INT.GATE and INT.CV signal busses can be **split into two equal halves** by removing jumpers **J1** and **J2** (see Fig. 7), so that for each whole bus, you can have two separate **CV/GATE subsystems**.

If on the other hand you'd like to have the same internal CV and gate available **on two busses at once**, you need to link the two together, with the special CV/gate leads, the A-100 BC.

This is how you go about it:

❒ Remove the A-100 from the electrical supply.

❒ Remove Jumpers **J1** and **J2**(see p.9) from the upper (see Fig. 8 ❶) and lower (see Fig. 8 ❷) system bus boards.

❒ Replace the jumpers with the special CV / gate leads, A-100 BC (see Fig. 8 ①, ②).

⚠ Make absolutely sure that you connect the leads correctly, joining up the upper INT CV with the lower INT CV, and the upper INT GATE with the lower, to avoid possible damage when you switch back on!

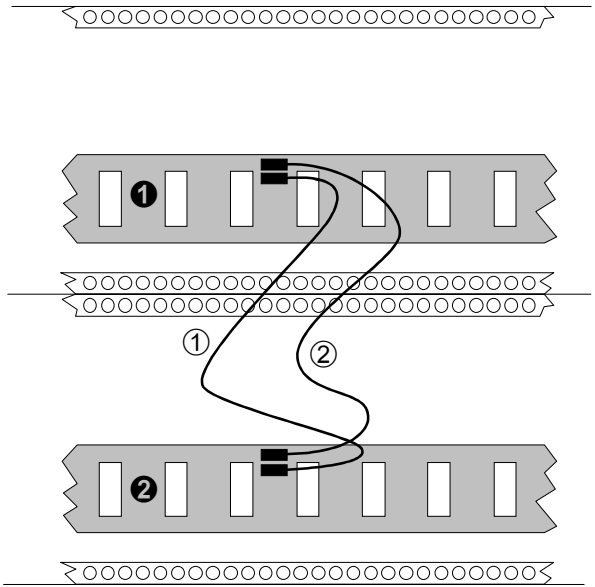

Fig. 8: Making a common INT.CV and INT.GATE signal path between the upper and lower busses.

3.4 Integrating the A-100 with MIDI

To link the A-100 into a MIDI system, you can use external MIDI interfaces like our **MCV4**, **MSY2** or **MCV24**.

The **MIDI-CV/SYNC Interface A-190-1** is a MIDI-to-CV/Gate/Sync interface with the following outputs:

- CV 1 (for pitch control, 12 Bit)
- CV 2 (any MIDI-Controller, 8 Bit)
- Gate
- Clock
- Start / Stop

The A-190 automatically sends pitch control CV and gate information out on the INT.CV and INT.GATE busses.

Another solution is the usage of the low cost **MIDI-CV Interface A-190-2** which has one Gate and four CV outputs available.

Another suitable MIDI-CV Interface for A-100 was the 24-channel **MCV24**, a 19" rackmount with its own power supply. As the MCV24 is no longer in production you will have to try to find a second hand unit.

VC Modules like the A-141 VC-ADSR and A-147 VC-LFO can be controlled via the A-190-1 or A-190-2, so that, for instance, a continuous MIDI controller can alter envelope parameters in real time. Since these controllers can be recorded by a MIDI sequencer, VC modules are effectively programmable.

Analog sequencing can be provided by the A-155 or the external **MAQ 16/3 MIDI Analog Sequencer.**

To convert up to 16 control voltages in the range 0...+5V (e.g. from a Theremin A-178 or Joy-Stick A-174-1 or Foot-Controller A-177-2 or ribbon controller A-198) into MIDI controllers the **CV-to-MIDI interface A-192** is the right choice.

4. A-100 Basic Systems

It's not in the nature of modular systems to have hard and fast rules about which modules should be included. But if you're just starting out along the modular path, it may be difficult to choose a sensible first set of modules. Accordingly, we've designed Basic Systems with all the modules mounted in a rack system, and 30 patch leads thrown in as well. For an exact run-down of the modules included in Basic System 1 (**A-100BS1**), see the table on the right of this page, and the illustration on the next page. To integrate BS1 it into a MIDI system, you would need a separate MIDI interface, such as an MCV4 or MCV24. In the Basic System 2 (**A-100BS2**) the MIDI interface A-190 is included (instead of A-150 and A-162). We also have available a small Mini System (**A-100MS**). See our topic prospectus for details.
The purpose and function of other modules will become more apparent as you work with your system, and you will be able to decide which extra modules you need for your particular purposes.

In the future other types of complete systems may be available. We are planning an Expansion System containing nearly all modules not included in the Basic Systems, a Vocoder System and a Sound Processing System without VCO's for external audio signals.

Pos.	Quantity	Module	Function	HP
upper	2	A-110	VCO	20
	1	A-114	Dual Ring Modulator	4
	1	A-115	Audio Divider	8
	1	A-116	Waveform Processor	8
	1	A-138b	Mixer (log)	8
	1	A-120	VCF 1 - 24 dB Low Pass	8
	1	A-121	12 dB Multimode Filter	12
	1	A-130	VCA (lin)	8
	1	A-131	VCA (log)	8
lower	1	A-118	Noise / Random	8
	1	A-148	Dual Sample & Hold	4
	2	A-145	LFO	16
	1	A-160	Clock Divider	4
	1	A-161	Clock Sequencer	4
	1	A-180	Multiples	4
	1	A-138 a	Mixer (lin)	8
	1	A-170	Dual Slew Limiter	8
	1	A-150	Dual VCS	4
	1	A-162	Dual Trigger Delay	8
	2	A-140	ADSR	16

Part	Description
A-100BUS	**Separate system bus** One bus board with 14 connectors for connecting modules, 3 control LEDs (+12,-12,+5V)
A-100AD5	**5V Low cost adapter** Additional power supply producing +5 V / 100 mA; can be connected to any free socket on the system bus board. For modules which require 5V (eg. A-113, 190, 191). This is a cheaper alternative to the NT5 +5 V power supply.
A-100NT5	**Separate 5 V power supply** +5 V / 500mA additional power supply, assembled and tested.
A-100PSU2	**Separate 12 V power supply** +/-12 V 1200mA additional power supply, assembled and tested.
A-100B...	**Blanking panels / back panels** **B1**: 1 HP / **B2**: 2 HP / **B4**: 4 HP / **B8**: 8 HP / **B42: 42 HP / B84**: 84HP
A-100B84P	**Back panel for power supply** Punched ready for power supply installation, with switches, safety fixings, and power supply connection cable.
A-100C ...	**Patch lead** Leads with two moulded 3.5mm plugs **C30**: 30 cm / **C50**: 50 cm / **C80**: 80 cm / **C120**: 120 cm

continued on next page ...

Part	Description
A-100OPM	**A-100 User Manual** Contains detailed description and instructions for use of all the currently available modules. It is included when you buy a complete system (A-100BS1, BS2, MS). When buying individual modules or frames, you have to order the manual separately. If you order the manual in advance the price for the manual will be credited when ordering a complete system later (not only a single module).
A-100SM	**A-100 Service Manual** Contains the schematics, silk screens, parts lists, assembly, test, basic principles and adjustment instructions of all currently available modules. The words (e.g. assembly instructions) are in German language but schematics, components overlays and parts lists are international. Available only to A-100 customers.

6. Items included as standard

The following parts are included in each order:

A-100BS1/BS2/MS - Basic Systems

- Rack system (basic frame), completely assembled, including two system bus boards, one 12V, 650mA power supply, internal power cables.
- All modules specified for the System (BS1, BS2 or MS) completely assembled, tested and mounted into the frame
- 30 patch leads for A-100BS1 and BS2
- 15 patch lead for A-100MS
- External power lead.
- Complete instruction manual (containing the manuals of all modules)
- +5V supply is not included (only the +5V low cost adapter for A-100BS1 and MS)

A-100G3/G6 - Rack System 3HU/6HU

- Rack system, completely assembled, including two system bus boards, one 12V, 650mA power supply, internal power cables.
- External power lead.
- +5V supply is not included

A- XXX - any module

- Module A-XXX.
- Ribbon cable for connection to the system bus.
- Fixing screws.

The instruction manual is not included when ordering a single module or frame. In this case the complete instruction manual has to be ordered additionally!

7. Further reading

The resources in the following list should help you increase your knowledge of analog synthesis, and the skill with which you can use modular systems like the A-100.

Specialist books

In English

Allen Strange, **Electronic Music Systems, Techniques and Controls**, 2nd edition, Wm. C. Brown Co. Publishers, Iowa, USA. ISBN 0-697-03602-2*

This book by Allen Strange is very comprehensive and thoroughly recommended, because as well as all of the basics it also includes a huge number of patches and practical tips. It's easy to read, instructive and very well organised. If your bookstore has trouble ordering a copy, then try the publishers. In Europe, try McGraw-Hill Publishing, tel +44 (0)1628 502500; or Susurreal, tel +44 (0)1363 774627), who had copies at £25 including postage in late 1996.

Vail, **Vintage Synthesizers**, GPI Books / Miller Freeman Inc. San Francisco, 1993, ISBN 0-87930-275-5* (A background read rather than great technical help.)

Synthesizer Technique ISBN 0-88188-715-3 and **Synthesizer Basics** ISBN 0-88188-714-5 - (revised re-prints of very useful and authoritative articles from Keyboard magazine, by Moog, Rhea, Milano, Coster, Duke, Powell, Gleeson, DeFuria, Anderton, et al.)

Crombie, **The Synthesizer & Electronic Keyboard Handbook** ISBN 0 330 28681 1, and **The New Complete Synthesizer** ISBN 0-7119-0701-3 (The latter especially is a good general introduction.)

Trythall, **Principles and Practice of Electronic Music,** 1973, ISBN 0-448-40002-6 (an early classic.)

Forrest, **The A-Z of Analogue Synthesisers, Part One (A-M)**, ISBN 0 9524377 0 8*, and **Part Two (N-Z),** ISBN 0 9524377 1 6* : Susurreal, England. tel +44 (0)1363 774627, fax +44 (0)1363 777872, email: pforrest@mail.eclipse.co.uk (A background read rather than great technical help.)

Chamberlin, **Musical applications of microprocessors**, Hayden Book Company, Rochelle Park / New Jersey, 1980, ISBN 0-8104-5773-3

* Only the books whose ISBN numbers are followed by an asterisk are definitely in print as of Dec 1996.

Specialist books in German

Dellmann / Thewes, **Synthesizer-Handbuch**, Musik Media / Augsburger Druck- und Verlagshaus, 1985

Enders, **Die Klangwelt des Musiksynthesizers**, Franzis-Verlag München, 1985, ISBN 3-7723-7761-0

Chapman, **Formant Musik-Synthesizer**, Elektor-Verlag Aachen, 1979, ISBN 3-921608-10-4

Aigner, **Formant Musik-Synthesizer-Erweiterungen**, Elektor-Verlag Aachen, 1981, ISBN 3-921608-19-8

Becker, **Synthesizer von gestern**, Musik Media Verlag Augsburg, 1990, ISBN 3-927954-00-4
Becker, **Synthesizer von gestern Vol. 2**, Musik Media Verlag Augsburg, 1995, ISBN 3-927954-01-2

Specialist magazines

The following useful magazines can mostly only be found second-hand or may possibly be available in some libraries, for photocopying articles.
Elektor, Elektor-Verlag Aachen

Elrad, Heise-Verlag Hannover

Electronic Musician, Polyphony Publishing Co., Oklahoma City / USA

Electronics and Music Maker / Music Technology, Cambridge, England.

Polyphony, Polyphony Publishing Co., Oklahoma City / USA

Synthesource (Curtis/CEM house magazine)

Video

A very good introduction to the basic techniques and programming methods of digital and analogue synthesis can be found in the 120-minute video **"The Secrets of Analog and Digital Synthesis"** by Steve deFuria (VH017, Warner Bros.).

8. Module Overview

(as of July 2009)

The following table may be used for planning and arranging an A-100 system regarding to need of space and current.

Module	Width [HP]	Current [mA]	Current@5V [mA]	Description
A-101-1	16	30	-	**Vactrol Steiner Filter** Vactrol filter with different inputs (!) for low/band/highpass
A-101-2	8	20	-	**Lowpass Gate** Combination of lowpass and VCA with vactrol (vactrol = LED/LDR- combination)
A-101-3	30	50	-	**12-Stage Modular Vactrol Phase Filter** Modular phaser with separate in/outputs for each stage and 2 polarizers
A-101-9	8	40	-	**Dual Universal Vactrol Module** 4 voltaged controlled resistors for modification of other modules
A-102	8	30	-	**Diode Lowpass** *(combined manual A-102/A-103)* voltage controlled 18 dB low pass with diodes as frequency controlling elements
A-103	8	30	-	**18 dB Lowpass** *(combined manual A-102/A-103)* voltage controlled 18 dB low pass (with TB303 type transistor ladder)
A-104	20	30	-	**Trautonium Formant Filter** Quad Low/Band Pass Filter as used in the so-called Trautonium (see A-113)
A-105	8	20	-	**SSM 24 dB Lowpass** *(combined manual A-105/A-122)* voltage controlled 24 dB low pass with the legendary SSM2044 circuit
A-106-1	14	40	-	**X-treme filter** voltage controlled MS20 filter clone, low/highpass simultaneously, +/- clipping controls
A-106-5	8	30	-	**SEM filter** voltage controlled 12 dB filter (SEM type), lowpass/notch/highpass with mixer, bandpass
A-106-6	12	50	-	**XP filter** voltage controlled filter (XP type) with 15 different filter types
A-107	26	200	-	**Multitype Morphing Filter** voltage controlled multitype filter with 36 different filter types and morphing feature

Module	Width	Curr.	Curr.@5V	Description
A-108	12	40	-	**6/12/24/48 dB Low Pass / Band Pass** voltage controlled low pass (ladder type) with 4 different slopes and bandpass
A-109	20	40	-	**Voltage Controlled Signal Processor** combination of 24 dB low pass, VCA and panning unit (CEM3379 based)
A-110	10	70	-	**VCO (Standard)** voltage controlled Oscillator with 4 different waveforms, hard-sync input
A-111-1	14	40	-	**VCO (High End)** like A-110 but improved waveforms, linear FM input, soft-sync input
A-111-5	26	80	-	**Synthesizer Voice** miniature synthesizer voice with VCO, VCF, VCA, ADSR and two LFOs
A-112	10	50	-	**SAMPLER** 8 bit sampler and wavetable oscillator
A-113	26	30	100	**Submarmonic Generator** Sound Generation unit as used in the so-called Trautonium (4 subharmonic oscillators)
A-114	4	40	-	**Dual Ring Modulator** 2 separate ring modulators
A-115	8	20	-	**Audio Divider** frequency divider for audio signals (rectangle waveforms)
A-116	8	20	-	**WP - VC Waveform Processor** module for dynamic waveform modification
A-117	8	20	-	**DNG / 808 - Digital Noise / Random Clock / 808-Source** digital noise and clock generator, 808-like sound source
A-118	8	20	-	**Noise / Random** analog noise generator with white and adjustable colored noise, random voltage
A-119	8	30	-	**External Input / Envelope Follower** Input module for external audio signals, includes envelope follower and gate generator
A-120	8	30	-	**VCF 1 - 24 dB Low Pass 1** voltage controlled 24 dB low pass (Moog type)

Module	Width	Curr.	Curr.@5V	Description
A-121	12	30	-	**VCF 2 - 12 dB Multimode Filter** voltage controlled 12 dB multimode filter (low pass, high pass, band pass, notch)
A-122	8	20	-	**VCF 3 - 24 dB Low Pass 2** *(combined manual A-105/A-122)* voltage controlled 24 dB low pass (with CEM3320, Oberheim type)
A-123	*8*	*20*	*-*	***VCF 4 - 24 dB High Pass*** *(module no longer available)voltage controlled 24 dB high pass*
A-124	8	30	-	**VCF 5 - 12 dB Wasp Multimode Filter** reproduction of the strange multimode filter used in the EDP Wasp Synthesizer
A-125	8	20	-	**VCP - Voltage Controlled Phaser** voltage controlled FET based phase shifter with resonance
A-126	8	80	-	**VCFS - Voltage Controlled Frequency Shifter** voltage controlled analog frequency shifter
A-127	28	100	-	**VCRF - Triple Voltage Controlled Resonance Filter** 3 independent voltage controlled band pass filters with 3 LFOs
A-128	20	20	-	**Fixed Filter Bank** filter bank with 15 band filters
A-129-1	20	100	-	**Vocoder Analysis Section** Analysis section of the modular vocoder
A-129-2	12	80	-	**Vocoder Synthesis Section** synthesis section of the modular vocoder
A-129-3	16	40	-	**Vocoder Slew Limiter** universal 5-fold voltage controlled slew limiter/attenuator/offset generator
A-129-4	8	30	-	**SLC - Slew Limiter Controller** controller module for slew limiter function of A-129/3
A-129-5	8	30	-	**VUV - Voiced / Unvoiced Detector** module for recognition of "voiced/unvoiced" speech

Module	Width	Curr.	Curr.@5V	Description
A-130	8	20	-	**VCA - Voltage Controlled Amplifier** voltage controlled amplifier with linear response
A-131	8	20	-	**VCA - Voltage Controlled Amplifier** voltage controlled amplifier with exponential response
A-132-1	4	20	-	**Dual Low Cost VCA** two simple voltage controlled amplifier with linear response
A-132-2	8	30	-	**Quad VCA** four VCAs with independent inputs and outputs, common loudness/level control
A-132-3	8	30	-	**Dual linear/exponential VCA** two separate VCAs with selectable control scale (switch, linear or exponential)
A-133	8	30	-	**Dual Voltage Controlled Polarizer** two special VCAs with positive and negative (=inverting) amplification
A-134-1	8	40	-	**VC PAN - Voltage Controlled Panning / Crossfader** module for voltage controlled panning or crossfading
A-134-2	4	20	-	**Dual VC Crossfader** Two separate voltage controlled crossfaders
A-135-1	22	30	-	**VC MIX - Voltage Controlled Mixer** 4 separate VCAs with common output
A-135-2	*?*	*?*	-	***VCF/VCA/Panning subsystem*** *(still under development)* *subsystem with VCFs with VCQ, VCAs and VC panning units with common stereo output*
A-136	8	30	-	**Distortion/Waveshaper** distortion and wave-shaping / wave-modifying module with extensive control possib.
A-137-1	14	40	-	**Voltage Controlled Wave-Multiplier I** waveform multiplier with 4 VC parameters: Multiples, Harmonics, Folding, Symmetry
A-137-2	14	30	-	**Voltage Controlled Wave-Multiplier II** makes one sawtooth VCO sound like five VCOs (four VC algorithmic phase shifters)

Module	Width	Curr.	Curr.@5V	Description
A-138 a/b/c	8	10/20c	-	**Mixer**, mixer for audio or control voltages (a: linear or b: logarithmic controls or c: polarizing mixer)
A-138d	8	20	-	**Manual Crossfader / Effect Insert Module** manually controlled crossfader and module to insert external effect units
A-138e	16	10	-	**Quad Three-Way Crossfader / Mixer / Polarizer** four separate three-way crossfader (i.e. fading between 3 different input signals)
A-138m	*~20*	*~?*	-	***4 x 4 Matrix Mixer*** *(still under development)* *matrix mixer with four inputs and four outputs, each row can be switched to uni/bipolar*
A-138x	8	0	-	**Mix Expander** expanding unit for A-138a/b, expands the number of available inputs to 9
A-139	*8*	*100*	-	***Headphone Amplifier*** *(module no longer available)* *stereo headphone amplifier with separate level and common loudness control*
A-140	8	20	-	**ADSR - Envelope Generator** envelope generator with 4 parameters: attack, decay, sustain, release; retrigger function
A-141	14	30	-	**VC-ADSR - Voltage Controlled Envelope Generator** voltage controlled envelope generator with 4 voltage controlled parameters
A-142	8	40	-	**VC Decay** voltage controlled envelope generator with one voltage controlled decay
A-143-1	28	70	-	**Complex Envelope Generator / Quad AD** Four daisy chained AD type envelope generators with polarizing mixer
A-143-2	26	70	-	**Quad ADSR** Four ADSR envelope generators with EOA/EOD/EOR gate outputs and retrigger feature
A-143-3	14	70	-	**Quad LFO** Four LFO modulation oscillators with triangle, rectangle and saw outputs, range switch
A-143-9	8	30	-	**Quadrature LFO/VCO** voltage controlled LFO/VCO, four sine outputs with 90 degrees phase shift between e.a.

Module	Width	Curr.	Curr.@5V	Description
A-144	8	30	-	**Morphing Controller** control voltage modifier to obtain morphing effects in combination with A-135
A-145	8	30	-	**LFO 1** modulation oscillator with 5 waveforms
A-146	8	20	-	**LFO 2** modulation oscillator with 2 waveforms and waveshape control
A-147	8	40	-	**VCLFO** voltage controlled modulation oscillator with 4 waveforms
A-148	4	20	-	**Dual S&H** two independent sample & hold devices
A-149-1	12	40	-	**Quantized/Stored Random Voltages** Replica of the legendary Buchla module "Source of Uncertainty" (part 1)
A-149-2	4	40	-	**Digital Random Voltages** expansion module for A-149-1, generates 8 digital random voltages/gates (high/low)
A-150	4	30	-	**Dual VCS - Voltage Controlled Switsches** two independent voltage controlled switches
A-151	4	20	-	**Quad Sequential Switch** electronical "rotary switch" with 4 positions
A-152	16	40	-	**Voltage Addressed Switch** electronical 8-fold "rotary switch" with voltage controlled addressing
A-154	22	60	-	**Enhanced Sequencer Controller** Expansion module for A-155, adds additional running modes and features to A-155
A-155	50	100	-	**Analog / Trigger Sequencer** 8 step analog and trigger sequencer
A-156	8	50	-	**Dual Quantizer** two control voltage quantizers with special selection features

Module	Width	Curr.	Curr.@5V	Description
A-160	4	40	-	**Clock Divider** frequency divider for clock/gate signals
A-161	4	20	-	**Clock Sequencer** clock sequencer expansion for clock divider A-160
A-162	8	40	-	**Dual Trigger Delay** two independent trigger delay devices
A-163	8	40	-	**Voltage Controlled Divider** divides the frequency of an audio signal by an integer factor controlled from a CV
A-164-1	6	10	-	**Manual Gate Module** three manually generated gate/trigger signals
A-165	4	20	-	**Dual Trigger Modifier** two independent trigger modifiers (inverter + transition edge detector)
A-166	8	40	-	**Logic Module** dual module with logical AND/OR/EXOR combinations + 2 logical inverters
A-167	8	20	-	**Analog Comparator/Offset-Generator/Subtractor** compares the difference of two voltages with fixed value and generates a gate from this
A-170	8	20	-	**Dual Slew Limiter** two independent portamento controllers or integrators
A-171	8	20	-	**VC Slew Limiter** voltage controlled portamento controller/integrator
A-172	4	10	-	**Maximum/Minimum Selector** selects from up to 4 analog inputs the maximum and minimum voltage
A-174-1	10	40	-	**Joy Stick** module with 2 separate CV outputs controlled by the X/Y position of the joy stick
A-174-2	~14	~20	-	***Wheels Module*** *(still under development)* *2 wheels, factor setting: one with, one without reset spring, uni- or bipolar CV output*

Module	Width	Curr.	Curr.@5V	Description
A-175	4	20	-	**Dual Voltage Inverter** two independent analog voltage inverter with displays
A-176	8	20	-	**CVS - Control Voltage Source** 3 manual adjustable control voltages
A-177-1	*8*	*30*	*-*	***External Foot Controller I*** *(module no longer available)* *interface module for 2 foot controlers and one double foot switch*
A-177-4	*4*	*~ 20*	*-*	***External Foot Controller II*** *(still under development)* *simple interface module for one foot controller and one double foot switch*
A-178	8	60	-	**Theremin Control Voltage Source** variable voltage/gate source controlled by hand movement
A-179	*8*	*60*	*-*	***Light Controled Voltage Source*** *(module no longer available)* *variable voltage/gate source controlled by light intensity*
A-180	4	-	-	**Multiples I** 8-fold multi connector (may be splitted into two 4-fold multi connectors)
A-181	4	-	-	**Multiples II** two multiples with 3.5 mm and 1/4“ mono and stereo sockets
A-182	6	0	-	**Switched Multiple** eight sockets that can be switched to one of two busses or turned off
A-183-1	*4*	*0*	*-*	***Dual Attenuator*** *(still under development)* *two simple passive attenuators*
A-183-2	*4*	*~ 20*	*-*	***Offset Generator + Attenuator/Polarizer*** *(still under development)* *generates an offset voltage that is added to an attenuated or inverted input voltage*
A-183-3	*4*	*~ 20*	*-*	***Amplifier*** *(still under development)* *simple DC coupled amplifier with adjustable gain, max. gain can be swithed to 1,2 or 4*
A-185-1	4	30	-	**Bus Access Module** module for access to bus signals CV and gate
A-185-2	6	30	-	**Precision Adder / Bus Access** high precision CV adder (0,1%) with four inputs and optional access to bus CV

Module	Width	Curr.	Curr.@5V	Description
A-186	4	0	-	**Gate / Trigger Combiner** 7 inputs that are "OR-wired" to the output, mainly for combination of gate/trigger signals
A-187-1	*?*	*?*	-	***Voltage Controlled DSP Effects Module*** *(still under development)* *DSP based effects module with four voltage controlled parameters*
A-188-1	14	80	-	**BBD Module** BBD module, available with 6 different BBD circuits from 128 to 4096 stages
A-188-2	30	120	-	**Tapped BBD Module** BBD module with 6 taps, single outputs and two (stereo) submixers
A-189-1	8	60	-	**Voltage Controlled Bit Modifier** 16 different voltage controlled bit modification effects (e.g. bit cruncher) with VC sample rate
A-190-1	10	10	• / 50	**MIDI-CV/SYNC-Interface** MIDI-to-CV and sync interface
A-190-2	6	30	-	**MIDI-CV-Interface** low cost MIDI-to-CV interface with manual glide control and four CV outputs
A-190-3	*?*	*?*	-	**Polyphonic MIDI/USB-CV-Interface** *(still under development)* *Midi-CV interface with four CV and gate outputs, different monophonic/polyphonic modes*
A-191	*12*	*30*	*• / 50*	***MIDI-CV-Interface/Shepard Generator*** *(module no longer available)16-fold* *MIDI-to-CV interface and Shepard generator*
A-192-1	12	100	-	**Voltage-to-MIDI Interface** 16 CV inputs (0...+5V) are converted into MIDI control change messages
A-192-2	*?*	*?*	-	**CV/Gate-to-Midi/USB-Interface** *(still under development)* *converts CV/Gate signals into Midi note messages*
A-195-1	*?*	*?*	-	**Pitch-to-CV/Gate/Midi/USB-Interface** *(still under development)* *converts clean monophonic audio signals into CV/Gate/Midi/UBS*

Module	Width	Curr.	Curr.@5V	Description
A-196	8	40	-	**Phase Locked Loop Module (PLL)** linear VCO + 3 phase comparators + lowpass in the form of a so-called PLL circuit
A-197-1	*14*	*50*	*-*	***Analog Meter*** *(module no longer available)Analog display (moving coil instrument with back light), 3 display modes*
A-197-2	34	100	-	**LCD Scope** (available only as kit without the scope) kit to install a Velleman LCD scope into the A-100 system
A-198	8	40	-	**Trautonium / Ribbon-Controller** Trautonium manual resp. ribbon controller, made of module + manual
A-199	10	80	-	**Spring Reverb** electronically simulated reverb by means of 3 spiral springs

9.1 Adding a 5V power supply

Some A-100 modules, for instance the A-113, A-190 or A-191, need an extra 5 V power supply, as well as the standard one. You can provide this with the **A-100 NT5** 5 V supply (or in certain circumstances, you can use the 100 AD5 5 V adaptor - see 9.2).

⚠ **If you are considering installing and connecting the NT5, it's crucial to take note of the following safety instructions:**

- **The installation and connection of the NT5 must only be carried out by a qualified electrician or technician.**
- **If no suitable expert is available, the rack must be sent to a service centre or direct to Doepfer Musikelektronik for the power supply to be fitted.**
- **Danger! Before installation and connection of the power supply, it is essential that the whole rack is isolated completely from the mains current.**

The 5V power supply needs to be mounted near to the main power input, on the blank upper back panel with four stand-offs, nuts, serrated washers, and bolts. Newer back panels (about since summer 1999) are already equipped with 4 monting holes required for the 5V supply. For back panels manufactured earlier the 4 holes have to be drilled to receive the power supply fixing bolts (Ø from. 3 to 3.5mm).

The NT5 **connection diagram** (Fig. 10) is on the next page. Check again that the rack is totally disconnected from the mains power supply, then:-

❒ Remove the two 115/230V mains cables (normally blue and black or brown cables) from the 12V power supply mains input, and reconnect them to the corresponding mains connectors on the 5V supply. The case shield / GND cables/connections remain unchanged as the shielding is connected directly to the metal frame (the yellow/green cable).

❒ Join up the two parallel connectors from the 5V mains input to the mains input of the 12V supply (using the correct wires from the blue and black or brown ones supplied).

❒ Connect the two low voltage outputs of the 5V supply (ground and +5V) to the system bus board which requires the 5V supply.

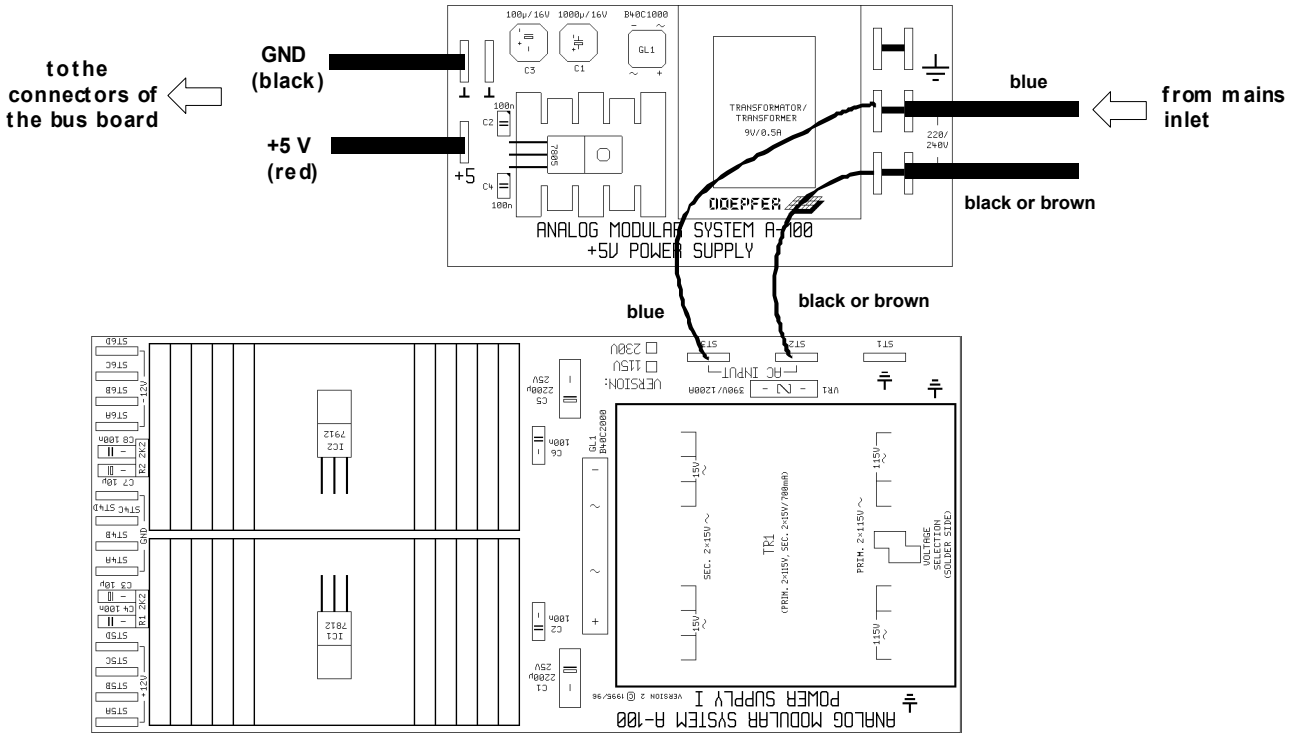

Fig. 10: NT5 power supply connections

⚠ The **yellow/green** wire is the **safety (earth) connection**, and must be never replaced by a different colour.

If you've been using the AD5 low-cost 5V adaptor, but are now installing an NT5, you must **remove the AD5** before commissioning the NT5!

9.2 Installing the AD5 low-cost 5V adaptor

The **AD5** can be used for the 5V power supply, as long as the following applies:

- The current for the modules that require a 5V supply doesn't exceed 100 mA (e.g. only one A-190 or A-191)
- There is enough current handling still available on the +12V supply to cope with the current requirements of the 5V modules.

The AD5 adaptor can be connected to any available 16-way socket on the system bus board (see Fig. 11). This will feed +5V to modules on that bus, as long as their current requirements don't exceed 100mA.

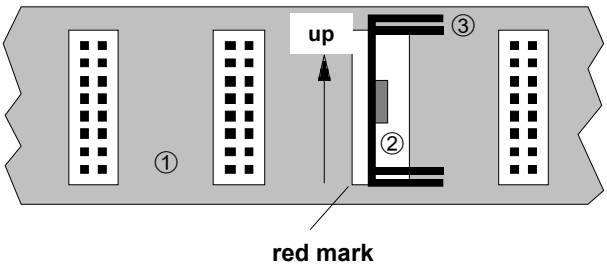

Fig. 11: Connecting the 5V low-cost adaptor (①: system bus board, ②: AD5, ③: heat sink)

To install the AD5, do the following:

Isolate the A-100 rack from the mains power supply by removing the main plug.

❒ Carefully insert the AD5 into a free socket on the bus board.

⚠ Make sure that the AD5 is the right way up, and aligned correctly with the bus socket. The correct position is shown on a sticker (with the **arrow pointing upwards**, and the **red mark at the bottom -** see Fig. 11).

The fins of the heat sink should be facing to the right.

It's vital to make certain that the 16-way plug and socket marry exactly, and aren't displaced up or down a pin, or to the left or right. If they are misaligned, the adaptor and/or the power supply may be damaged immediately you switch on.

9.3. Using the mini power supply/ bus

9.3.1. Introduction

The **A-100 MNT** (**Mini power supply / bus**) is composed of a miniature power supply and system bus, with connectors for four modules. It's designed to be used with a small set-up of just a few modules, in your own custom-designed case.

The idea is that then you can use individual A-100 modules - for instance the filters, the filterbank, ferquency shifter, sampler, MIDI interface, etc. - as free-standing pieces of equipment, **which can easily be integrated with your other instruments or recording equipment.**

The power supply provides the usual A-100 system requirements of **+12 V** and **-12 V**, and an additional **+5 V** supply, for the few modulses (for instance A-190, A-191) which need it.

The **maximum current loading capacity** totals **100 mA** for **+/- 12 V** and/or **50 mA** for the **+5 V** supply.

The sytem bus provides connections for four System A-100 modules. As well as the power supply, it also carries "INT.CV" and "INT.GATE" connections (see A-100 manual, main introduction, chapter 3, 'The A-100 signal flow'.).

The A-100 MNT is supplied as standard with an **external power supply**, which has to be connected to the socket on the MNT's circuit board.

⚠ The external power supply's transformer supplies **alternating current (AC)**.

If you want to use another power supply instead of the one supplied, it must have a voltage output of about **7 to 9 V AC** and **a capacity of at least 300 mA**.

If you connect an external power supply which produces direct current (DC), the A-100 MNT simply won't work!

⚠ Both the A-100 MNT and any connected modules must be **firmly fixed into a proper casing.**

Any sort of **"flying construction" is absolutely discouraged,** because if two conductors from separate modules accidentally make contact, (for instance if the bus-bars from one module ended up touching another module's bus-bars), damage will almost certainly result.

In cases like that, the DOEPFER guarantee is definitely void.

9.3.2. A-100 MNT - Overview

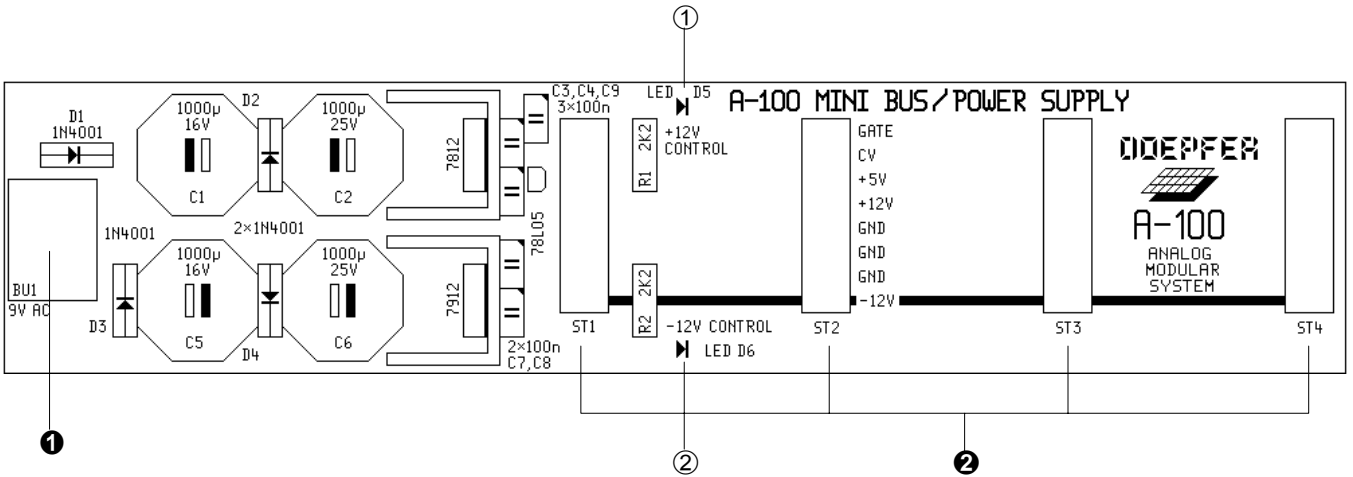

Controls:

① **LED** : LED indicator for +12 V supply.

② **LED** : LED indicator for -12 V supply.

In- / Outputs:

❶ **BU 1** : Input for external power supply (7 ... 9 V AC)

❷ **ST 1 ... ST 4** : Bus output sockets for four modules.

9.3.3. Controls / indicators

① LED • ② LED

LEDs ① and ② indicate that the power supply is working properly. Once the MNT is connected, both LEDs should come on.

⚠ If both LEDs don't come on, first of all check that mains power is available at the socket which the MNT power supply was connected to; then that the mains adaptor is actually putting out voltages, and that a DC adaptor hasn't been used by mistake. If both these points are checked, then the MNT must be defective. The same applies if just one of the LEDs comes on.

9.3.4. In- / outputs

❶ BU 1

This is the socket to which the plug from the external power supply is connected.

❷ ST 1 ... ST 4

The sockets labelled ❷ on the diagram on p.2 are where the modules are connected.

So... to connect modules up to the MNT .....

❒ Disconnect the power supply lead from socket ❶.

❒ Connect the **ribbon cable supplied with each module** to the module's **bus connector** (see ① in Fig. 1). As a rule, this is 16-way, but on some modules it's only 10-way. Check that the cable connector is oriented correctly, (see ② in Fig. 1), and press it on to the module's bus pins.

⚠ Be very careful to ensure that **the coloured marking** on the ribbon cable is at the **bottom of the module's connector** (see ③ in Fig. 1) and that the connection is perfect, and **pushed fully home, not at a slight angle**. Failure to check this may result in the module's instant destruction as soon as the power is re-connected.

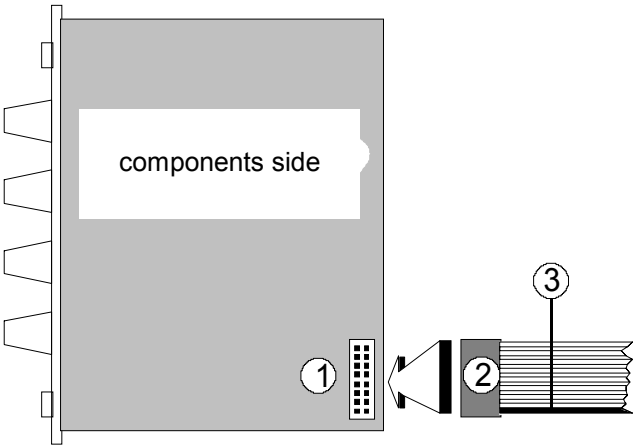

Fig. 1: Connecting the ribbon cable to the module

❒ Now join the free end of the ribbon cable (see ② in Fig. 2) to the nearest available position on the system bus board (see ① in Fig. 2).

⚠ Again ensure that **the coloured marking** on the ribbon cable is at the **bottom of the module's connector** (see ③ in Fig. 1) and that the connection is perfect, and **pushed fully home, not at a slight angle**. Failure to check this may again result in disaster.

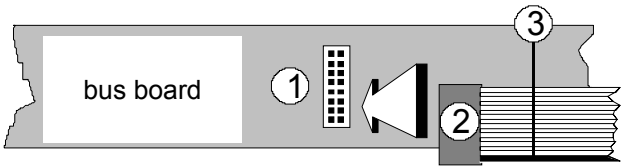

Fig. 2: Connecting the ribbon cable to the bus board.

❒ Now fix the module solidly in its case.

❒ Re-connect the A-100 MNT's power supply, and then switch on the mains again.

❒ Test out the newly installed module.

If it doesn't seem to be working as expected, **immediately** disconnect the system from the power supply again.

In this case, double-check the connections, making completely sure that the ribbon cable is the right way round where it connects to the module and to the bus.

1. Introduction

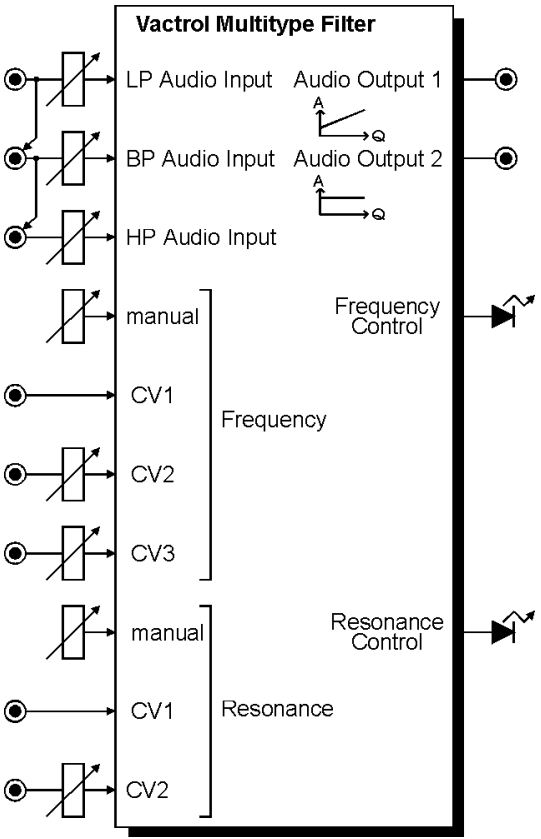

Module A-101-1 is a special **multitype filter** based on an idea by Nyle A. Steiner from the year 1974. Injecting an audio signal into different points of a standard low pass filter circuit leads to the three filter types **low pass** (LP), **band pass** (BP) amd **high pass** (HP). For **each filter type** a **separate input** is available and the sum of the three filtered signals appears at the **common output**. Even a **notch** filter can be realized.

In contrast to the original circuit so-called ***vactrols*** are used instead of diodes as variable resistors for **frequency** and **resonance control**. A *vactrol* is a **combination** of a **light depending resistor** (LDR) and a **light emitting diode** (LED) both put into a small light-proof case. *Vactrol* based circuits are known for their **soft low-distortion sound**. For details about vactrols and the A-101-1 circuit principles please use the corresponding links in the A-101-1 info page on our web site www.doepfer.com.

The three **filter audio inputs** are normalled via **switching sockets**, i.e. the BP input is connected to the LP jack socket provided that no cable is plugged into the BP socket (same applies for HP/BP inputs). Each audio input is equipped with an attenuator. The audio inputs are very sensitive and enable **distorted sounds** too.

For both **frequency** and **resonance** manual control and several control voltage inputs are available.

Two LEDs **display** the current **frequency** and **resonance** settings.

2. Overview

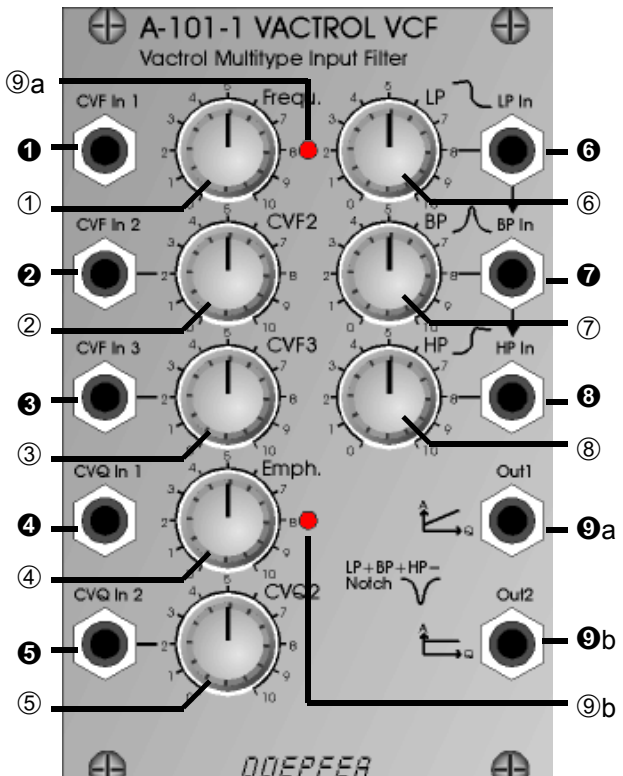

Controls:

①	**Frequency**	manual frequency control
②	**CVF2**	attenuator for FCV input ❷
③	**CVF3**	attenuator for FCV input ❸
④	**Emphasis**	manual resonance control
⑤	**CVQ2**	attenuator for QCV input ❺
⑥	**LP**	attenuator for LP audio input ❻
⑦	**BP**	attenuator for BP audio input ❼
⑧	**HP**	attenuator for HP audio input ❽
⑨a/b		LED controls for frequency and resoance

Inputs / Outputs:

❶	**CVF In 1**	frequency control voltage input 1
❷	**CVF In 2**	frequency control voltage input 2
❸	**CVF In 3**	frequency control voltage input 3
❹	**CVQ In 1**	resonance control voltage input 1
❺	**CVQ In 2**	resonance control voltage input 2
❻	**LP In**	low pass audio input
❼	**BP In**	band pass audio input
❽	**HP In**	high pass audio input
❾a	**Out 1**	audio output 1
❾b	**Out 2**	audio output 2

3. Controls / Inputs / Outputs

① **Frequency** (control) / ❶ **CVF In 1** (socket)
② **CVF2** (control) / ❷ **CVF In 2** (socket)
③ **CVF3** (control) / ❸ **CVF In 3** (socket)

This group of elements is responsible for the filter frequency. Control ① **Frequency** is used to adjust the frequency manually. The control voltage inputs ❶ **CVF In 1**, ❷ **CVF In 2** and ❸ **CVF In 3** enable voltage control of the filter frequency by means of external voltages (e.g. ADSR, LFO, random voltage, S&H). The inputs ❷ **CVF In 2** and ❸ **CVF In 3** are equipped with the attenuators ② **CVF2** and ③ **CVF3**. Input ❶ **CVF In 1** has no attenuator available.

Remark: Module A-101-1 uses so-called vactrols to control frequency and resonance. The light depending resistors inside the vactrols show a considerable slowness/inertia of the resistance variation. Consequently frequency changes are not as fast as for other A-100 filters that do not use vactrols. Fast attacks or decays (CV = ADSR) or FM effects in audio range (CV = LFO or VCO) are not possible with vactrol based circuits. Please use one of the other A-100 filters for these purposes. By means of a LFO with gradually increasing frequency one can discover the maximum modulation frequency that the vactrols are able to follow.

The LED right from the frequency control ① is a rough measure of the current filter frequency. This LED is connected in series with the LEDs inside the vactrols and consequently shows the current illumination inside the vactrols.

Due to the"crooked" response of *vactrol*s the filter has not an exact frequency control standard (like V/Oct). The inevitable tolerances and tracking errors between different vactrols will also lead to an individual sound of each module and individual frequency and resonance behaviour (see below).

④ **Emphasis** (control) / ❹ **CVQ In 1** (socket)
⑤ **CVQ2** (control) / ❺ **CVQ In 2** (socket)

This group of elements is responsible for the filter resonance (emphasis, Q factor). Even the resonance control is realized with *vactrols*. Consequently this parameter is voltage controlled, too. Control ④ **Emphasis** is used to adjust the resonance manually. The control voltage inputs ❹ **CVQ In 1** and ❺ **CVQ In 2** enable voltage control of the resonance by means of external voltages. Input ❺ **CVQ In 2** is equipped with the attenuator ⑤ **CVQ2**. Input ❹ **CVQ In 1** has no attenuator available.

The LED right from the resonance control ④ is a rough measure of the current filter resonance. Same remarks as for the frequency LED applies (see above).

Resonance can be increased up to self-oscillation. But due to the vactrol tolerances and tracking errors mentioned above resonance resp. self-oscillation deviations over the frequency range may occur.

⑥ **LP** (control) / ❻ **LP In** (socket)
⑦ **BP** (control) / ❼ **BP In** (socket)
⑧ **HP** (control) / ❽ **HP In** (socket)

These are the audio inputs of the module with the corresponding level controls (attenuators) for low pass (LP), band pass (BP) and high pass (HP) function. Here the audio signal resp. audio signals are fed in.

The audio input sockets are normalled, i.e. the BP input is connected to the LP input provided that no cable is plugged into the BP socket. Same applies for the HP -> BP inputs. This simplifies the patch in case that a common signal is used for the three filter inputs. The arrow symbols at the front panel indicate the normalled sockets.

The audio inputs are very sensitive to obtain distorted sounds if desired. From about middle position (~ 5) distortion appears with A-100 standard audio signals (e.g. VCO output).

The level controls are adjusted to obtain the desired filter sound.

The following table shows some examples for certain control settings in case that a common audio signal is used for all three filter inputs (i.e. the normalling feature is used and the common signal is fed into the LP socket and consequently available at the BP and HP input too).

Control			
LP	**BP**	**HP**	**Result**
~ 5	0	0	low pass
0	~ 5	0	band pass
0	0	~ 5	high pass
~ 5	~ 5	~ 5	notch (inverse BP)
~ 5	0	~ 5	band pass with offset
~ 5	~ 5	0	low pass + band pass
0	~ 5	~ 5	highpass gate

The value "~ 5" is only an example. Instead of 5 any other position (e.g. 3 or 8) can be chosen. But for combinations that include multiple "~ 5" settings (e.g. notch) all "~ 5" controls have to be turned to the same position. Beyond ~ 5 distortion may occur that affects the result too.

Pay attention that the notch filter does not arise from a combination of low pass and high pass only - as one would expect. Even the band pass control has to be turned up. The reason for this behaviour are the phase conditions inside the filter circuit.

Band pass with offset means that a share of all frequencies passes the circuit. High pass gate means that the filter frequency setting also affects loudness but not only the frequency.

Of course the controls can be adjusted to any values to experiment with different mixtures. The table shows only some typical examples.

If different audio signals are fed into the filter inputs the output is the sum of the input signals with each input filtered to the corresponding filter type, frequency and resonance settings. Consequently a frequency and reonance depending mix appears at the output.

Basics about the different filter types (low pass, band pass, high pass, notch) and the resonance function can be found e.g. in the manual of the A-121 Multimode Filter.

❾a **Out 1** / ❾b **Out 2** (sockets)

These are the two audio outputs of the module. Output 1 is the output of the original circuit. In the original circuit the output level distinctly depends upon the resonance (higher resonance = higher output level). Output 2 compensates this behaviour by the usage of an additional vactrol that is connected in series to the vactrol that controls the resonance. This additional vactrol forms a simple VCA that compensates the level increase for higher resonance settings to a great extent (but not perfect).

4. User Examples

not yet ready

- examples with different audio signals (e.g. 3 parallel VCOs, which have no fixed phase relation to each other)
- voltage controlled filter panning with module A-134
- examples with phase shifter between the audio inputs

1. Introduction

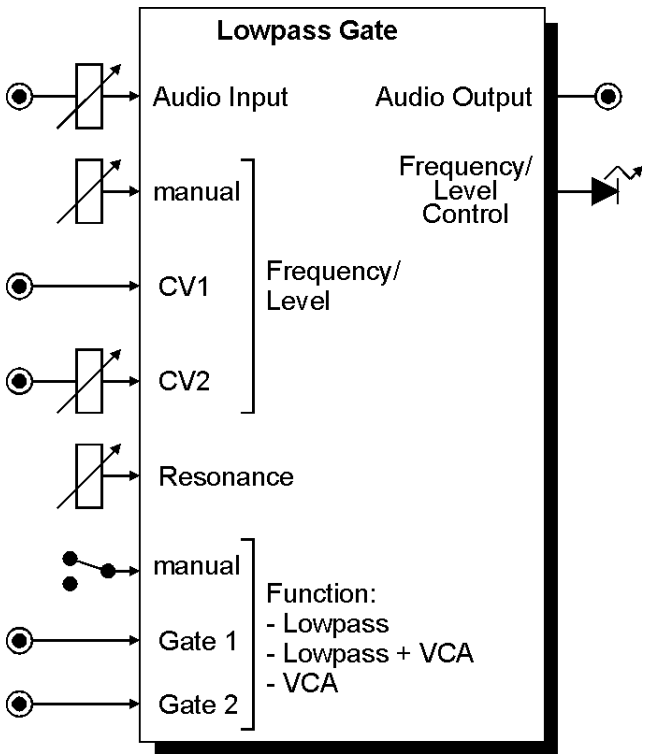

Module A-101-2 is a **vactrol based combination of Low Pass filter (LP) and VCA**. Additionally a combined mode LP+VCA is available. In this mode the sound becomes more dull as the loudness decreases. The A-101-2 was inspired by module 292 of Don Buchla. He also intruduced the term "**Low Pass Gate**" for this combination of functions.

The **function** of the module is controlled by a manual **switch** or by two **gate** inputs.

In principle the A-101-2 is a **12 dB low pass** that can be switched to VCA or a combination of Low Pass and VCA. The controlling elements for frequency resp. loudness are so-called **vactrols**. A vactrol is a **combination** of a **light depending resistor** (LDR) and a **light emitting diode** (LED) both put into a small light-proof case. Vactrol based circuits are known for their **soft low-distortion sound**. For details about vactrols please use the corresponding link in the A-101-2 info page on our web site www.doepfer.com.

Frequency resp. **loudness** is controlled **manually** and by two **control inputs**.

The audio input is very sensitive in filter mode to obtain **distortion** effects if desired.

The **resonance** function "colors" to the sound and is adjustable all the way up to **self-oscillation**.

In contrast to the Buchla design the A-101-2 offers the resonance feature, attenuators for both CV and audio input, and two gate inputs to control the function of the module in addition to the manual toggle switch.

2. Overview

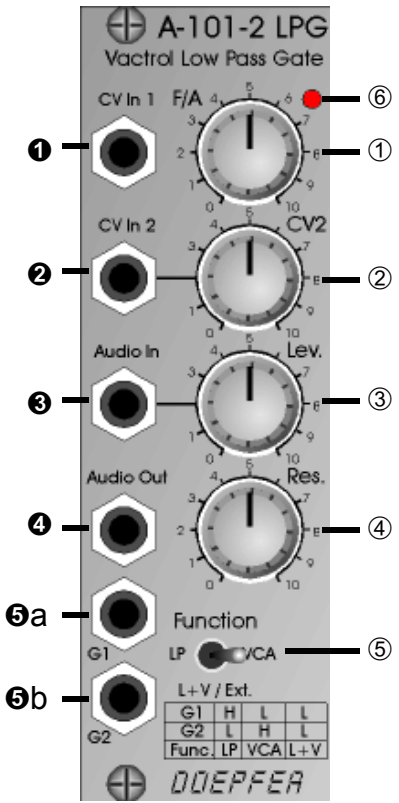

Controls:

①	**F/A**	manual frequency/loudness control
②	**CV2**	attenuator for CV input ❷
③	**Level**	attenuator for audio input ❸
④	**Resonance**	resonance control
⑤	**Function**	function toggel LP / LP+VCA / VCA
⑥		LED control for frequency/loudness

Inputs / Outputs:

❶	**CV In 1**	frequency/loudness CV input 1
❷	**CV In 2**	frequency/loudness CV input 2
❸	**Audio In**	audio input
❹	**Audio Out**	audio output
❺a	**G1**	function control input 1 (gate 1)
❺b	**G2**	function control input 2 (gate 2)

3. Controls / Inputs / Outputs

① **F/A** (control) / ❶ **CV In 1** (socket)
② **CV2** (control) / ❷ **CV In 2** (socket)

This group of elements is responsible for the filter frequency resp. loudness (audio level / amplitude) according to the selected function. Control ① **F/A** is used to adjust the frequency resp. loudness manually. The control voltage inputs ❶ **CV In 1** and ❷ **CV In 2** enable voltage control of the frequency resp. loudness by means of external voltages (e.g. ADSR, LFO, random voltage, S&H). The input ❷ **CV In 2** is equipped with the attenuator ② **CV2**. Input ❶ **CV In 1** has no attenuator available.

Remark: Module A-101-2 uses so-called vactrols to control frequency and resp. loudness. The light depending resistors inside the vactrols show a considerable slowness of the resistance variation. Consequently frequency resp. loudness changes are not as fast as for other A-100 filters or VCAs that do not use vactrols. Fast attacks or decays (CV = ADSR) or FM effects in audio range (CV = LFO or VCO) are not possible with vactrol based circuits. Please use one of the other A-100 filters or VCAs for these purposes. By means of a LFO with gradually increasing frequency one can discover the maximum modulation frequency that the vactrols are able to follow.

The LED near the frequency control ① is a rough measure of the current frequency resp. loudness. This LED is connected in series with the LEDs inside the vactrols and consequently shows the current illumination inside the vactrols.

Due to the"crooked" response of *vactrol*s the filter has not an exact control standard (like V/Oct or dB/V). The inevitable tolerances and tracking errors between different vactrols will also lead to an individual sound of each module and individual frequency and resonance behaviour.

③ **Level** (control) / ❸ **Audio In** (socket)

This is the audio input of the module with the corresponding level control (attenuator). At socket ❸ the audio signal to be processed by the module is fed in (e.g. VCO output).

The audio input is very sensitive in the low pass mode so that even distorted sounds can be obtained - especially for higher resonance settings. From about middle position (~ 5) distortion appears with A-100 standard audio signals (e.g. VCO output). Even in the VCA and combined LP+VCA mode distortions are possible. But they are distinctly smaller than in low pass mode.

④ **Resonance** (control)

In **low pass mode** this is the resonance control. The **resonance** function "colors" to the sound and is adjustable all the way up to **self-oscillation**. Due to the vactrol tolerances and tracking errors mentioned above resonance resp. self-oscillation deviations over the frequency range may occur.

In the VCA mode control ④ only changes the overall loudness.

In the combined LP+VCA mode control ④ affects both loudness and resonance.

The resonance function was not available for Buchla's low pass gate. To reproduce the original Buchla sound the resonance control simply has to be set fully counterclockwise.

❹ **Audio Out** (socket)

This socket is the audio output of the module. According to the selected mode the low pass filtered resp. amplitude modulated input signal appears.

⑤ **Function** (toggle switch)
❺a G1 (socket) / **❺b G2** (socket)

This group of elements serves to select the desired function resp. mode. These three functions are available:

Function	Switch position	G1	G2
low pass	LP	high	low
low pass + VCA	L+V/Ext.	low	low
VCA	VCA	low	high

The function can be selected with the toggle switch ⑤ or the two gate inputs **❺a G1** and **❺b G2**. If the gate inputs are used to selected the function the toggle switch has to be in middle position L+V/Ext. (i.e. the grey shaded area in the above table).

For the gate inputs "low" corresponds to a control voltage range of about 0...+2V, "high" corresponds to about +3...+12V.

4. User Examples

not yet ready

1. Introduction

Module A-101-3 is a **12 stage phase shifter** with **vactrols** as phase shifting elements. A vactrol is a combination of a **light depending resistor** (LDR) and **LED** both put into a light-proof case. They are known for their **smooth sound** behaviour as vactrols are distortion-free linear elements in contrast to any semiconductor (like transistors or OTA in other designs). For more general details about vactrols please look at the vactrol basics page on our web site www.doepfer.com.

In contrast to other phaser designs the A-101-3 is much more flexible and offering a lot of new features not available from other phasers on the market. The A-101-3 offers **access to each of the 12 input and output stages** leading to a lot of new filters that cannot be obtained in other ways. Especially the **free patchable feedback loops** (yes, not only one feedback loop is possible) between each of the 12 stages, the **separate phase shift control** for the **stages 1-6** and **7-12**, and the **2 polarizers** intended to control the feedback loops lead to **completely new filter types** (a polarizer is a circuit that is able to generate positive and negative amplifications in the range -1...0...+1 with -1 = inversion, 0 = full attenuation, +1 = unchanged signal, for details concerning the polarizer function please look at the A-133 VC Polarizer or A-138c Polarizing Mixer module).

On our **web site** are lot of **frequency response curves** availabe that show which filter types can be realized.

Internally the module is made of **2 independent 6 stage phase shifters** (1-6 reps. 7-12) with **separate audio inputs** (with attenuators), **audio outputs** (with mix control), and **phase shift control units**. The phase shift control units feature both manual and voltage controlled phase shifting (e.g. from a LFO, ADSR, Random Voltage, Theremin CV, Foot Controller CV ...). For each sub-module a **phase shift display (LED)** is available. The LED shows the illumination state of the 6 vactrols of the sub-module in question as it is connected in series with the internal vactrol LEDs.

Each of the **12 phase shift stages** is equipped with an **audio output** socket and **feedback input** socket to obtain full flexibility to create a multitude of different filters. The **audio input** signal and the **output** signals of **stage 6** resp. stage **12** are **mixed** with 2 manual controls to obtain **effects at two audio outputs** (for normal phase shifting effect this is 50% input signal and 50% phase shifted signal).

The two submodules are **internally connected** via **normalled** sockets so that **two 6 stage phase shifters** can be obtained **without external patches**.

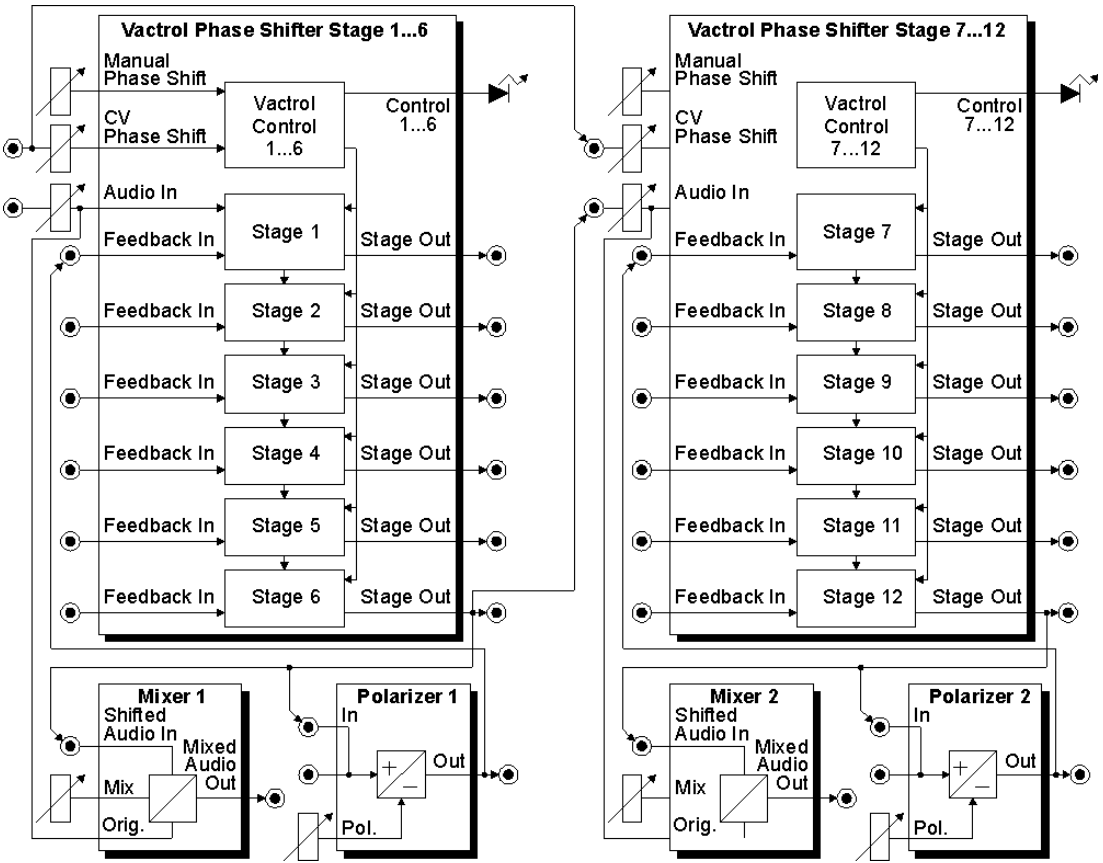

Fig.1: A-101-3 Overall view

2. Basic principles

The module is made of **two identical units** that differ only in the normalling of the sockets (i.e. how the switching contacts of some sockets are internally pre-wired). Therefore only one of the two units is described with reference to fig. 1 on the preceding page. The stages 1-6 belong to the first unit, 7-12 to the second one. Some basics concerning the function of a phaser (frequency response, **comb filter**) can be found in the manual of the VC phaser A-125 too.

The **vactrol control unit** is made of a **logarithmic voltage-to-current converter** that converts the sum of the manual phase shift setting and the external control voltage into a current. This current is used to drive the 6 **LEDs inside the vactrols** of the phase shift stages and the display LED. The 6 **photo resistors** inside the vactrols that work as phase shift controlling elements respond to the illumination intensity and create different **phase shift**s for different illuminations.

The (attenuated) audio input signal is fed into the first phase shift stage (stage 1). The 6 **phase shift stages** are **daisy-chained**. **Each stage** is equipped with it's own **audio output** (stage out) and **feedback input**. The sum of the feedback input and the output of the preceding stage are mixed and fed into the corresponding phase shift stage.

This **modular concept** allows the **realization of different phasers** as well as a lot of other filters too as all inputs and outputs are free patchable. For example phasers with 2 up to 12 stages, phasers with free eligible simple or multiple feedback loops or parallel working phasers are possible. On our web site a lot of frequency response curves are available that show which types of phasers and filters are possible with this modular concept.

The module contains two additional circuits: a **mixer** and a **polarizer** (one for each unit).

The **mixer** is used to combine the incoming **original audio signal** (audio In) with the **phase shifted signal** (shifted audio In) with adjustable ratio. The typical setting for a phaser is 50:50, i.e. both the original and the shifted signal have the same level. This creates the typical phaser *jet* sound that is based on the **comb**-like frequency response curve. But even different ratios make sense. If only the phase shifted signal is used one obtains the so-called **phase vibrato** effect. The socket "Shifted Audio In" is normalled to stage output 6. Consequently a 6-stage phaser is obtained at the socket "Mixed Audio Out" provided

that no plug is inserted into this socket. To obtain a phaser with more or less stages the output of the corresponding stage has to be connected to the socket "Shifted Audio In". To obtain e.g. a 12-stage phaser the output of stage 12 has to be connected to "Shifted Audio In" of mixer 1.

The **polarizer** is intended to control the **feedback loops.** In principle a polarizer is an attenuator. But in contrast to a normal attenuator it enables both **positive and negative attenuations** (i.e. amplifications in the range -1...0...1). Negative attenuation resp. amplifications means that the signal is inverted (look at the manuals of A-133 CV Polarizer or A-138c Polarizing Mixer for details). The middle position of the polarizer control corresponds to full attenuation (or amplification = 0). This corresponds to the fully counterclockwise position of a "normal" attenuator. The fully clockwise position corresponds to amplification +1 (i.e. the signal passes unchanged), the fully counterclockwise position corresponds to amplification -1 (i.e. the signal is inverted). The "Polarizer In" socket is normalled to stage output 6. Consequently the output of stage 6 is used as polarizer input provided that no plug is inserted into this socket. The polarizer output is normalled to "Feedback In Stage 1". Consequently the feedback loop "stage 6 → stage 1" is active without external patches and the polarizer control is used to adjust the feedback intensitiy and polarity (remember: zero feedback corresponds to middle position). On our web site a lot of examples of single and multipe feedback loops are published (available via A-101-3 information page).

And this is the result from all these response curves:

- The **number of notches** is defined by the number of stages used as output (number of notches = integer of the stage number/2)
- The **number of resonance peaks** is defined by the number of stages used for feedback (number of peaks = integer of number of feedback stages used/2)
- The **height of the resonance peaks** is determined by the amount of resonance (adjusted with the polarizer)

By means of the **open modular concept** of the module A-101-3 **different numbers of notches and peaks** are possible by using the corresponding patch for output in use and feedback loop(s) !

3. Overview

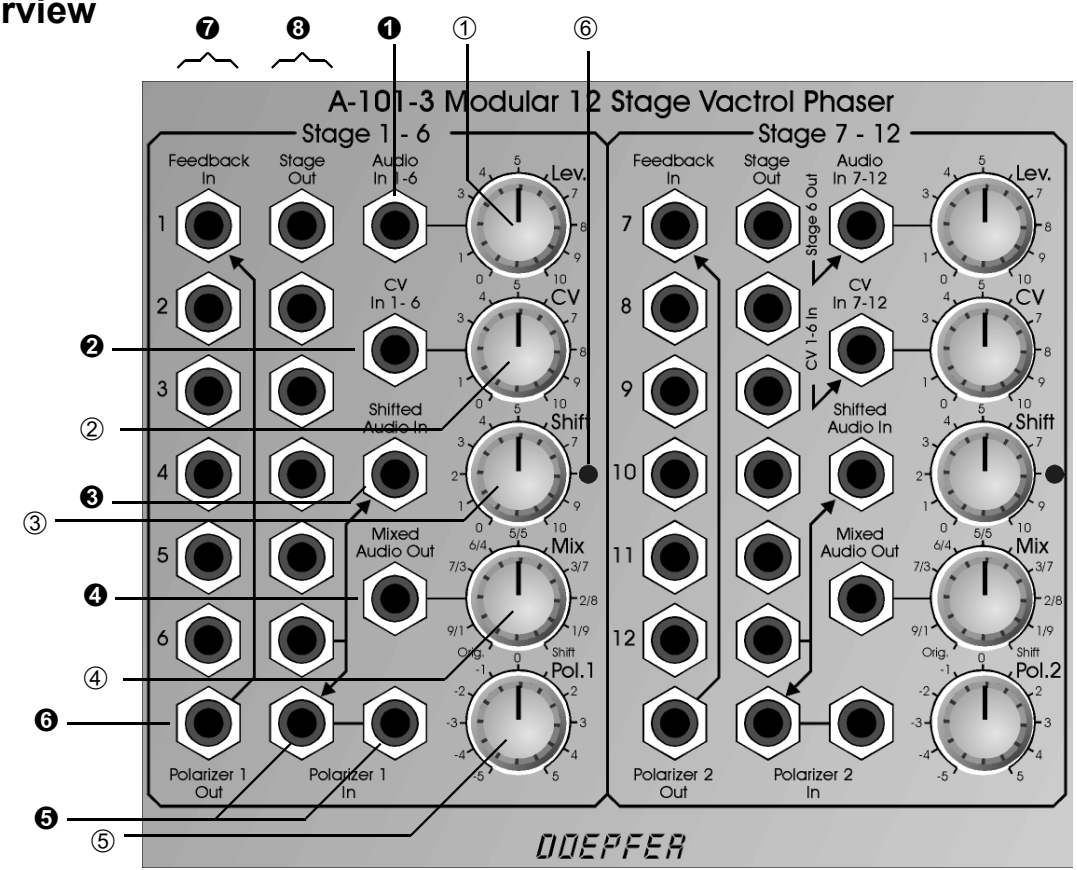
A-101-3 Modular 12 Stage Vactrol Phaser
Stage 1 - 6
Stage 7 - 12
Feedback In
Stage Out
Audio In 1-6
Audio In 7-12
Stage 6 Out
CV In 1-6 In
CV In 1- 6
CV In 7-12
Shifted Audio In
Mixed Audio Out
Lev.
CV
Shift
Mix
Pol.1
Pol.2
Orig.
Shift
Polarizer 1 Out
Polarizer 1 In
Polarizer 2 Out
Polarizer 2 In
DOEPFER

Controls:

① **Level**: attenuator for audio input ❶

② **CV**: attenuator for CV input ❷

③ **Shift**: manual phase shift

④ **Mix**: mixing ratio between original and phase shifted signal

⑤ **Pol.**: polarizer control

⑥ **Shift**: LED display for pase shift (= brightness of the LEDs inside the vactrols)

Inputs / Outputs:

❶ **Audio In**: Audio input

❷ **CV In**: Control voltage input

❸ **Shifted Audio In**: Mixer input for phase shifted signal (normalled to output stage 6)

❹ **Mixed Audio Out**: Mixer output (= phase shifter audio output)

❺ **Polarizer In**: Polarizer input (two sockets, one is normalled to output stage 6)

❻ **Polarizer Out**: Polarizer output

❼ **Feedback In**: Feedback inputs (6x, feedback In 1 is normalled to polarizer output)

❽ **Stage Out**: Phase shifter outputs (6x)

Only the elements of one of the two identical phase shift units is specified. The second unit is identical with these exceptions:

- "Audio In 7-12" is normalled to output stage 6 (i.e. all 12 stages are daisy-chained - even between stage 6 and stage 7 - provided that no plug is inserted into socket "Audio In In 7-12")
- "CV In 7-12" is normalled to socket "CV In 1-6" (i.e. same CV for both units provided that no plug is inserted into socket "CV In 7-12")

4. Controls

❶ Audio In / ① Level

Socket ❶ is the audio input with the assigned attenuator ①. Feed the audio signal that has to be provided with the phaser/filter effect into socket ❶. Adjust the *Level* control ① so that the output signal does not distort - unless you want to obtain distortion. For normal A-100 levels (e.g. VCO A-110) distortion appears at about middle position of control ①. The input was made a bit more sensible than for other modules to be able to obtain distortion without an additional module. Distortion might be interesting with certain feedback settings.

Attention: For the right unit the audio input ❶ *Audio In In 7-12* is normalled to stage output 6 of the left unit ! This simplifies the patching of phasers with more than 6 stages as the output of stage 6 is connected to the audio input of stage 7 provided that no plug is inserted into socket *Audio In In 7-12*. If both units are used as separate phasers/filters each unit is supplied with it's own audio signal that is connected to socket ❶ (*Audio In In 1-6* resp. *Audio In In 7-12*).

❷ CV In / ② CV / ③ Shift

This group of elements is responsible for the phase shift control. Knob ③ *Shift* is used to adjust the phase shift manually. With an external control voltage (e.g. LFO, Random, ADSR, Theremin, Ribbon controller, foot controller, MIDI-to-CV) applied to socket ❷ *CV In* the phase shift can be modulated. Knob ② *CV* is used to adjust the depth of the CV modulation.

Attention: For the right unit the socket ❷ *CV In 7-12* is normalled to socket ❷ *CV In 1-6*. This simplifies patches with identical CVs for both units (e.g. phasers with more than 6 stages) as the phase shift controls of both units are supplied with the same control voltage (applied to socket ❷ *CV In 1-6*) provided that no plug is inserted into socket socket ❷ *CV In 7-12*. If both units are operated separately even separate CVs are applied to the CV input sockets.

The voltage difference required at socket ❷ to take advantage of the full phase shift range is about 5V (with attenuator ② fully clockwise).

④ Mix / ❸ Shifted Audio In / ❹ Mixed Audio Out

Knob ④ *Mix* is used to adjust the ratio between the original audio signal (i.e. the signal applied to socket ❶) and the signal at socket ❸ *Shifted Audio In*. Socket ❹ *Mixed Audio Out* is the mixer output and normally the audio output of the phaser.
Socket ❸ is normalled to stage output 6. Provided that no plug is inserted into socket ❸ one obtains a 6 stage phaser at output ❹ *Mixed Audio Out*. If another stage output is connected to socket ❸ phasers with 2 - 12

stages can be obtained. The output of stage 1 does not lead to a phaser but a high pass or low pass according to the polarity of the signal fed into socket ❸. E.g. one of the polarizers can be used to define the polarity and to fade from highpass to lowpass and vice versa. To obtain a phaser with 7-12 stages the output of stage 7-12 has to be connected to socket ❸ *Shifted Audio In* of the left (!) unit as only here the original signal is available as the second input of the mixer (the mixer of the right unit does not have available the original that is connected to audio input ❶ of the left unit).

❺ Polarizer In / **❻ Polarizer Out** / ⑤ **Pol.**

These elements correspond to the polarizer. The working principle of the polarizer is described in chapter 2. The two sockets ❺ *Polarizer In* form a "miniature multiple" and are the input of the polarizer. Socket ❻ *Polarizer Out* is the output of the polarizer.
The function of the polarizer (i.e. the amplification in the range -1...0...+1) is determined by the position of control ⑤ *Pol*.
The left one of the sockets ❺ *Polarizer In* is normalled to stage output 6. The output of the polarizer is normalled to the feedback input of stage 1 (❼ *Feedback In 1*). Provided that no plugs are inserted a feedback loop from stage 6 to stage 1 is established. In the middle position of control ⑤ *Pol* no feedback occurs. At fully counterclockwise position maximum negative, at fully clockwise position maximum positive feedback occurs.

To obtain different feedback loops the sockets ❺ *Polarizer In* and ❻ *Polarizer Out* have to be connected with the desired output stages resp. feedback inputs.

By using the second polarizer or external modules (e.g. VCA, VC polarizer A-133, filter, distortion, waveshaper) even multiple feedback loops are possible - leading to very interesting frequency responses with multiple resonance peaks.

Another special feature of the A-101-3 are "forward loops", i.e. it is possible to feed a stage output to a feedback input of a higher stage (via polarizer).

By means of multiple feedbacks and/or forward loops in combination with the positive/negative amplifications of the polarizers and different controls and patches of the stages 1-6 resp. 7-12 very complex frequency response curves can be realized that cannot be obtained in any other way.

❼ **Feedback In** (6x)

These are the feedback inputs of the phase shifting stages. Applications of these inputs have been described on the preceding pages. The feedback input of stage 1 is normalled to the polarizer output, i.e. *Feedback In 1* is connected to the polarizer output - provided that no plug is inserted into socket ❼ *Feedback In 1*.

❽ **Stage Out** (6x)

These are the outputs of the phase shifting stages. Applications of these outputs have been described on the preceding pages. The output of stage 6 is normalled to socket ❸ *Shifted Audio In* and to the left one of the two sockets ❺ *Polarizer In*.

5. User Examples

not yet ready

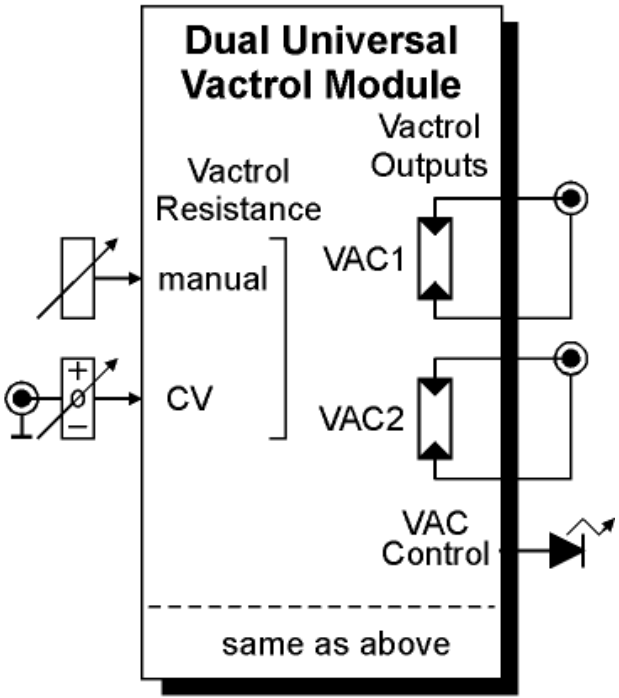

Fig. 1: A-101-9 Controls and In/Outputs

1. Introduction

We call the A-101-9 an *Universal Vactrol Module*. It contains two identical sub-units. Each unit has two vactrol outputs available that are controlled manually and by an external control voltage with polarizer. A *vactrol* is a combination of a light depending resistor (LDR) and a light emitting diode (LED) both put into a small light-proof case. For more general details about vactrols please look at the Vactrol basics page on our website www.doepfer.com. Increasing the LED brightness causes a decrease of the LDR resistance. The LED at the front panel displays the brightness of the LEDs of the vactrol pair in question. The resistances of the two vactrols of each sub-unit change simultaneously. This allows to control two parameters at the same time or to control a parameter that requires two variable resistors (e.g. frequency for certain filter circuits). The LDR terminals of each vactrol are connected to the jack sockets labelled VAC1 and VAC2.

Applications: A-101-9 introduces voltage control to any function that is controlled by a fixed or variable resistor (e.g. a two-terminal normal or trimming potentiometer). There are many applications within the A-100 (e.g. Attack, Decay, Release of envelope generators, time of slew limiters and trigger delays, random rate of noise module). But the module can be used even outside the A-100 in combination with any other circuit that uses a variable or fixed resistor to control a parameter (e.g. wah-wah or parameters of guitar stomp boxes). Even for "circuit bending" the vactrol outputs can be used.

2. Basic Principles

As mentioned in the introduction each sub-unit of the universal vactrol module has available two variable resistors. Each resistor is realized as a light depending resistor (LDR) that is combined with a light emitting diode (LED) both put into a small light-proof case. The two terminals of each LDR are connected to the two terminals of the corresponding VAC socket. In contrast to other sockets of the A-100 consequently the VAC sockets are not grounded and can be treated as ”free” variable resistors without any connection to the A-100 power supply or A-100 GND. This allows the usage of the VAC outputs in any circuit (within A-100 or external) that uses a variable resistor to control a parameter of the device in question. Typical examples within the A-100 are:

Attack, Decay, Release of all envelope generators (A-140, A-143-1, A-143-2)
Slew time of slew limiter (A-170)
Delay time and duration of trigger delay (A-162)
Clipping functions of the extreme filter (A-106-1)
Clock rate of digital noise (A-117)
Random rate and level of analog noise (A-118)
Frequency of Trautonium filter (A-104)

The A-101-9 module is intended only for users who are familiar with electronics as some soldering is required to install the vactrol connections on the module or device that has to be controlled by the A-101-9. For all A-100 modules that can be combined with the A-101-9 the required information (i.e. the position of the two solder points for the parameter/potentiometer in question) is shown in the attachment. We also offer a service for A-100 users who are not familiar with soldering to modify the module in questions. The charges for the modification depend upon the customer’s wishes and the working time required to carry out the modification. If there is sufficient space at the front panel of the module in question an additional socket can be added. For this a new hole has to be drilled into the existing front panel. If there is not sufficient space at the front panel a blind panel with additional socket(s) has to be mounted next to the module. The connections between the new additional socket(s) of the modified module and the vactrol output(s) of the A-101-9 are then made with standard patch cables.

For external devices (e.g. wah-wah pedal, effect unit, guitar stomp box) the user has to find out the solder points in question himself (a schematics of the device will be very helpful). We have to point out that the user is responsible for any damage that may appear at the module or device that is modified to be connected to the vactrol output of the A-101-9. All modifications are at your own risk! **Only low voltage devices** (max 40V) are allowed to be modified with the A-101-9. It is not allowed to use the A-101-9 in combination with high voltage devices (i.e. more than 40V). In this case there is **danger to life** !

Normally the vactrol is connected in parallel to the resistor/potentiometer that controls the parameter in question and the potentiometer is set to it's maximum value (e.g. 1 MΩ). The dark resistance of the vactrol is several MΩ and consequently has no or little effect to the overall value. As the brightness inside the vactrol increases the LRD resistance becomes smaller and has the same effect as operating the potentiometer. The existing potentiometer can also be used to determine the upper value of the parameter in question if it is not set to it's maximum value. Typical example: a 1 MΩ potentiometer is used to control the decay of an envelope generator by discharging a capacitor to GND. The vactrol is connected in parallel to the decay potentiometer. The setting of the potentiometer defines the maximum decay time as the vactrol can only reduce the total resistance and consequently reduce the decay time.

Even a trimming potentiometer or a fixed resistor can be replaced or switched in parallel to one of the vactrol outputs of the A-101-9. If this makes sense depends upon the circuit in question and can be used for circuit bending applications.

In order to obtain a reasonable control scale the A-101-9 uses a logarithmic current source for the vactrol LEDs. With a linear relationship between the applied control voltage and the LED current the overall resolution would be very unsuitable. Fig. 2 shows the relation between LED current and LDR resistance of a vactrol (both scales of the graph are logarithmic).

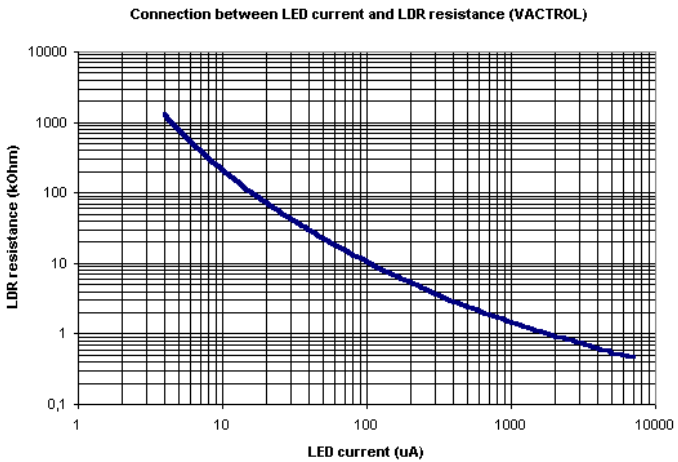

Fig. 2: Relation between LED current and LDR resistance of a vactrol

Remark:
The A-101-9 cannot be used (or only with limitations) to replace a three-terminal-potentiometer (voltage divider) as the vactrol is a two terminal element only. Under certain conditions a three-terminal-potentiometer can be replaced by a fixed resistor and the vactrol connected in series. But this is possible only if the circuit is not sensitive to the overall resistance (vactrol+fixed resistor) as this changes while the vactrol changes it's value. One has to look at the schematics if this is true or try it out.

3. Overview

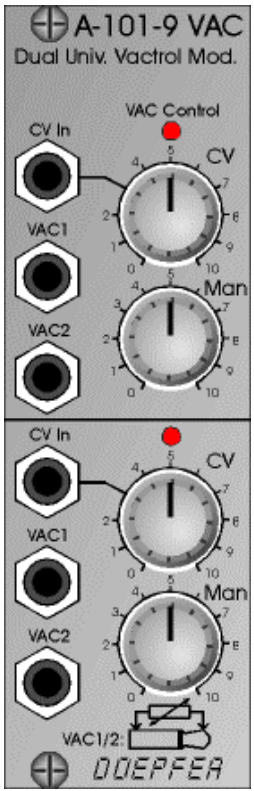

Fig. 3: front panel

Controls:

①	CV:	polarizer for CV input
②	Man.:	manual vactrol resistance control
③	VAC control:	LED display

In- / Outputs:

❶	CV In:	control voltage input
❷a	VAC1:	vactrol 1 connector
❷b	VAC2:	vactrol 2 connector

Remark 1: The front panel scale of the CV input control ① is wrong for the first series of modules. This control is a polarizer not a simple attenuator as shown on the front panel. The attenuator has been replaced by a polarizer after the front panels of the first series have already been printed.

Remark 2: In contrast to other A-100 sockets the VCA1/2 sockets ❷a/b are not grounded, i.e. the two terminals of the vactrol are connected to the two terminals of the socket in question.

4. Controls and In- / Outputs

② Man.: manual vactrol resistance control
❶ CV In: control voltage input
① CV: polarizer for CV input

This group of elements is responsible for the current vactrol resistance. Knob ① *Man* is used to adjust the vactrol resistance manually. Turning this knob clockwise reduces the vactrol resistance and lights up the display LED ③. A CV input ❶ is available to control the the vactrol resistance by an external control voltage (e.g. LFO, envelope follower, random, ADSR, keyboard CV, sequencer, theremin, ribbon controller, foot controller, Midi-to-CV, ...). The CV input is equipped with a **polarizer**. In principle a polarizer is an attenuator, but in contrast to a normal attenuator it enables both positive and negative attenuations (i.e. amplifications in the range -1...0...1). Negative attenuation means that the signal is inverted (please refer to the manuals of A-133 CV Polarizer or A-138c Polarizing Mixer for details). The middle position of the polarizer control corresponds to full attenuation (or amplification = 0). This is the same as the fully counterclockwise position of a "normal" attenuator. The fully clockwise position of the polarizer corresponds to amplification +1 (i.e. the signal passes unchanged), the fully counterclockwise position corresponds to amplification -1 (i.e. the signal is inverted).

❷a VAC1: vactrol 1 connector
❷b VAC2: vactrol 2 connector
③ VAC control: LED display

The sockets ❷a and ❷b make available the terminals of the two vactrols of each sub-unit. In contrast to most other A-100 sockets these sockets are not grounded, i.e. the two terminals of the vactrol are connected to the two terminals of the socket in question. The resistance of the two vactrols of each sub-unit changes simultaneously. The reason is that for some applications two simultaneously changing resistors are required (e.g. for some filter circuits).
The LED ③ displays the current vactrol resistance. A dark LED indicates a high resistance, a bright LED a small resistance. The minimum resistance range for each vactrol is about 1 kΩ (fully bright LED) to 500 kΩ (completely dark LED) but the actual resistance range varies a bit due to the vactrol tolerances (minimum value 500 Ω ... 1 kΩ at fully bright LED, maximum value 500 kΩ ... 2 MΩ at completely dark LED). For more general details about vactrols please look at the Vactrol basics page on our website www.doepfer.com.

5. Application Examples

The following examples show the silk-screen of the corresponding A-100 module to be able to find the correct solder points where the vactrol outputs have to be connected to. All silk-screens are top view. The solder terminals of the normal or trimming potentiometer(s) that can be modified by means of the A-101-9 are marked with dots. For some examples even fixed resistors are changed into variable resistors by means of the vactrol outputs of the A-101-9.

One solution is to wire the marked terminals to additional jack sockets.

***Attention:* These additional sockets are allowed to be patched to A-101-9 vactrol outputs only. Connecting the sockets to other in/outputs may damage the module in question ! We recommend to mark these additional sockets correspondingly to avoid problems.**

If there is sufficient space at the front panel of the module in question an additional socket can be added. For this a new hole has to be drilled into the existing front panel.

If there is not sufficient space at the front panel a blind panel with additional socket(s) has to be mounted next to the module. For this we offer special 4HP blind plates with 8 holes (same as the A-180 front panel but without printing). In this case the connections between the new additional socket(s) of the modified module and the vactrol output(s) of the A-101-9 are made with standard A-100 patch cables.

If the module A-101-9 has to be assigned firmly to another module without patching the vactrol output(s) of the A-101-9 can be wired directly to the marked terminals of the module that has to be modified. In this case the corresponding socket(s) ❷**a** and/or **b** should be marked to indicate that they are internally wired already and cannot be used for other applications.

5.1. Envelope Generator A-140 (A, D, R)

Affected potentiometers:

Attack (A): P1
Decay (D): P2
Release (R): P4

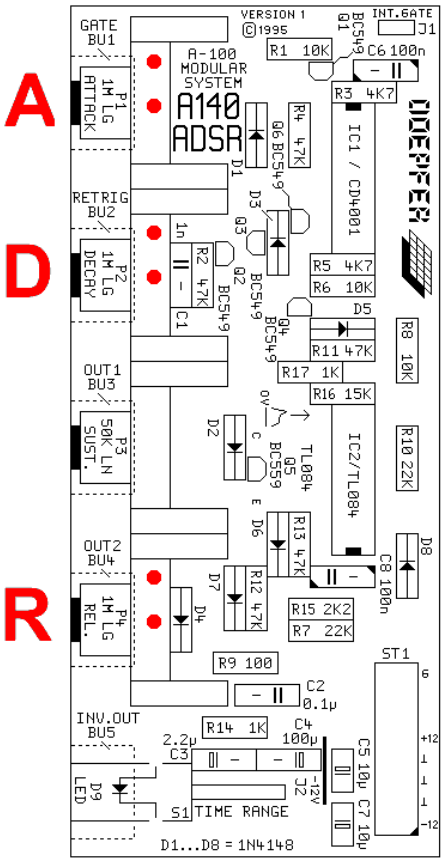

5.2. Envelope Generator/LFO A-143-1 (A, D)

Affected potentiometers:
Attack (A): P1
Decay (D): P2

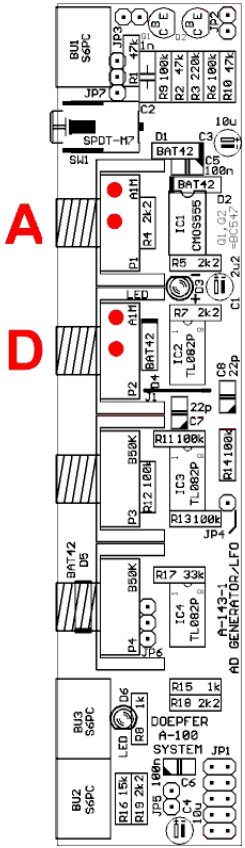

5.3. Envelope Generator A-143-2 (A, D, R)

Affected potentiometers:
Attack (A): P1
Decay (D): P2
Release (R): P4

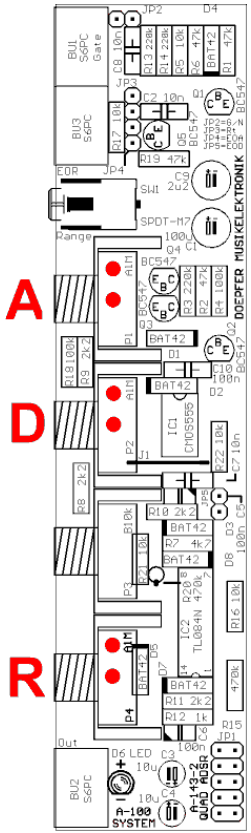

5.4. A-143-3 Quad LFO (frequency)

Affected resistors:

frequency: R4

(has to be increased from 100k to about 1M and connected in parallel to VAC1 or VAC2)

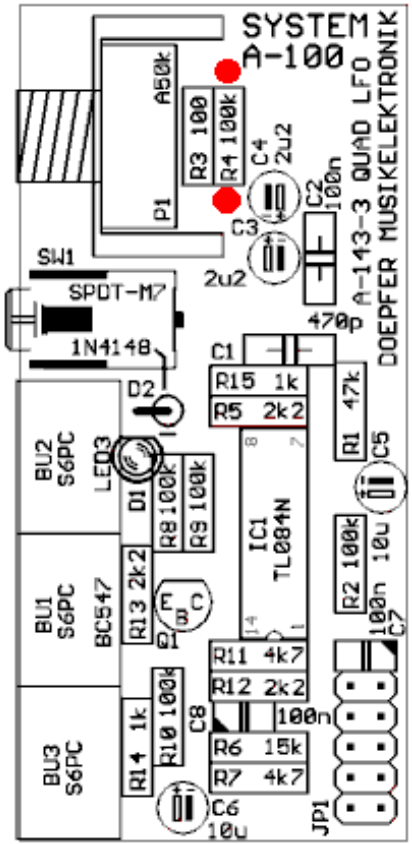

5.5. Digital Noise A-117 (clock, f1, f2)

Affected potentiometers:

Digital noise section:
Noise Clock (clk): P1

808 sound section:
Frequency 1 (f1): P2
Frequency 2 (f2): P3

clk

f1

f2

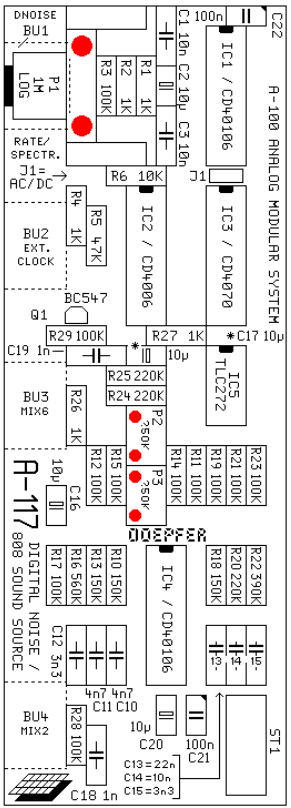

5.6. Analog Noise A-118 (random rate, random level)

Affected potentiometers:
Random Rate (rate): P3
Random Level (level): P4

rate

level

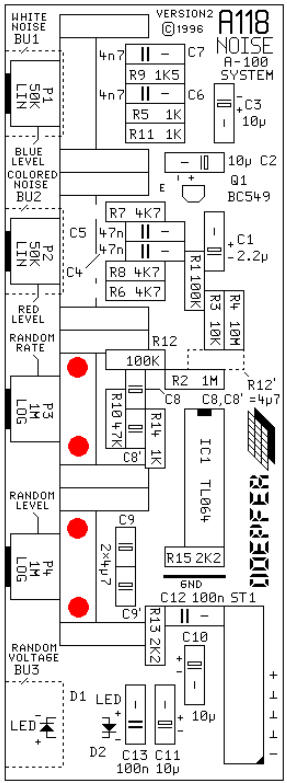

5.7. Gate Delay A-162 (delay, length)

Affected potentiometers:
Delay: P1 (2x)
Length: P2 (2x)

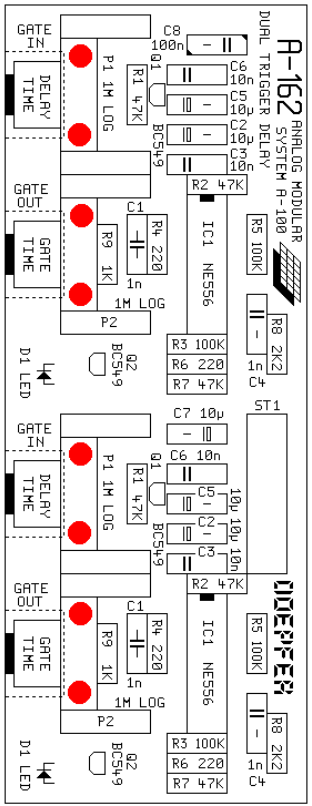

5.8. Slew Limiter A-170 (slew time)

Affected potentiometers:

upper section:
lag time: P1

lower section:
lag time + : P2
lag time – : P3

lag time

lag time +

lag time -

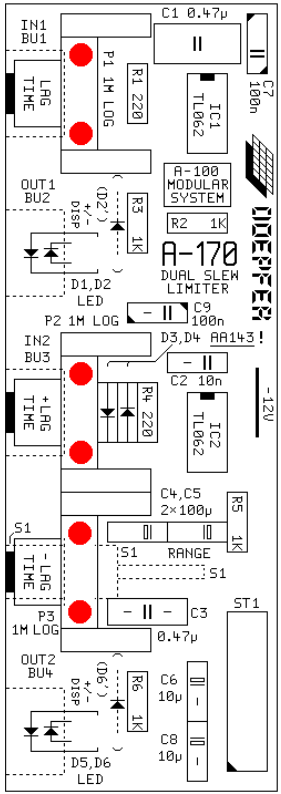

5.9. A-104 Trautonium filter (frequency, resonance)

Affected resistors:

frequency: R5 + R7
(have to be increased from 15k to about 1M and connected in parallel to VAC1 and VAC2 of the same sub-unit)

Affected potentiometers:

resonance: P3

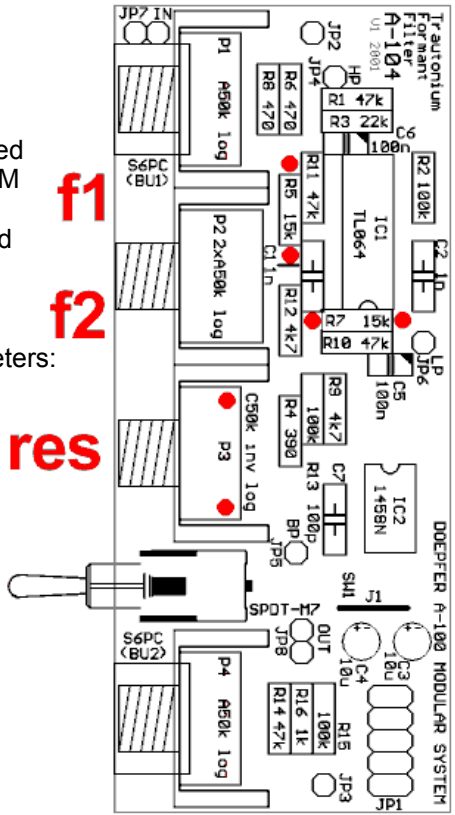

5.10. X-treme Filter A-106-1 (clipping)

Affected pin headers:

clipping + : JP5
clipping – : JP6

For simultaneous control of cl+ and cl- VAC1 and VAC2 of the same sub-unit are used.

For separate control of cl+ and cl- VAC1 (or VAC2) of two separate sub-units are used.

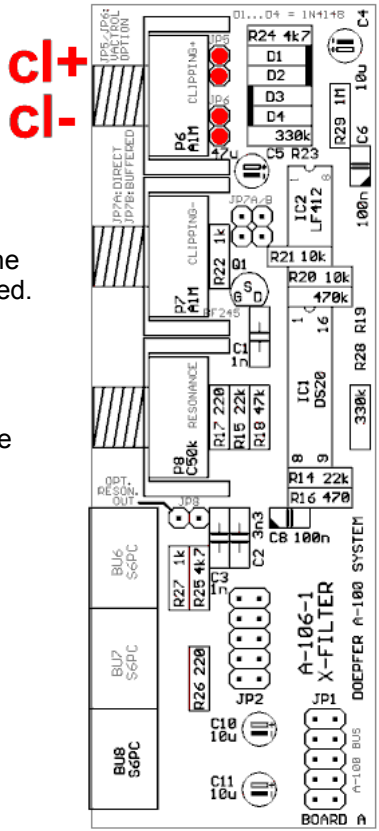

5.11. A-124 Wasp filter (resonance up to self oscillation)

Affected resistors:

resonance: R13

Res

with this modification normally resonance up to self oscillation is possible

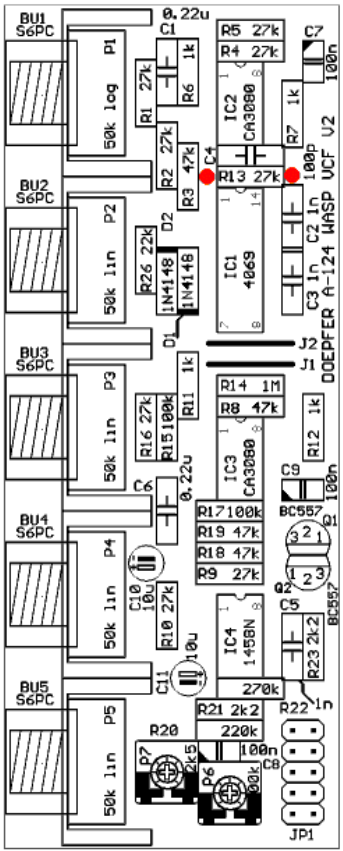

5.12. A-127 Triple VC resonance filter (resonance)

Affected resistors:

resonance: R13

Res

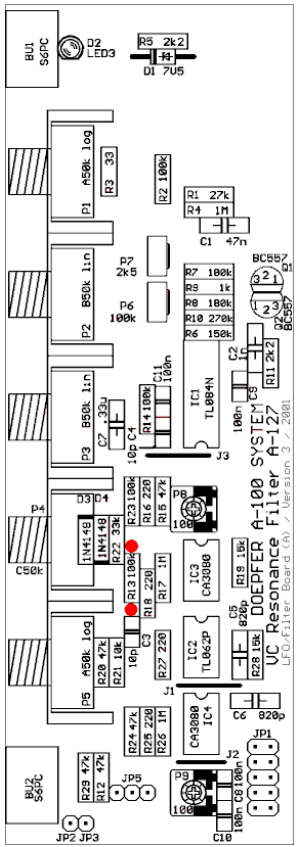

5.13. A-196 PLL (VCO offset, low pass frequency)

Affected potentiometers:

VCO offset : P1
Low pass frequency : P2

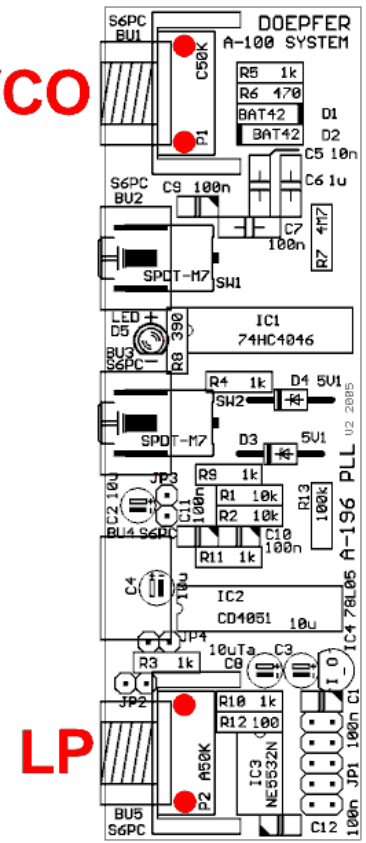

5.14. A-199 Spring reverb (emphasis)

Affected potentiometers:

Emphasis: P3

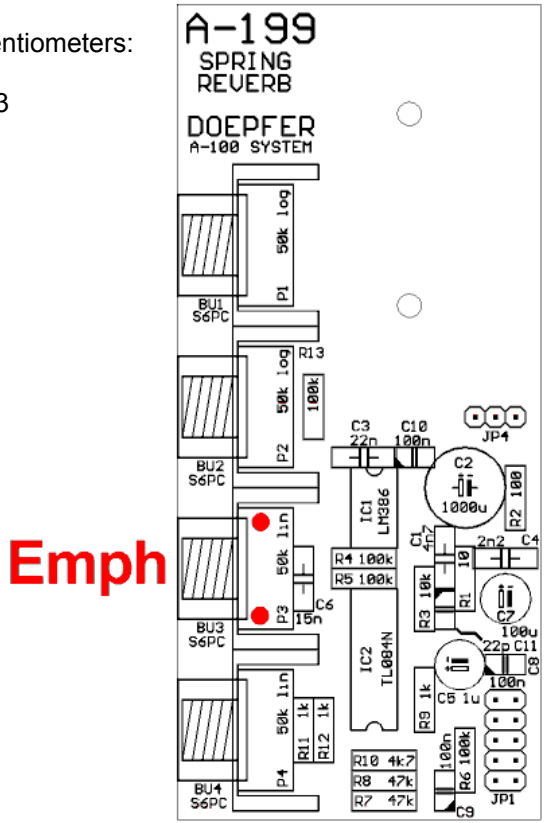

5.15. A-110 VCO (triangle/sine waveshaping)

Affected resistor:

waveshaping: R33

changes the waveshape of the triangle and sine outputs:
triangle → saw
sine → half sine

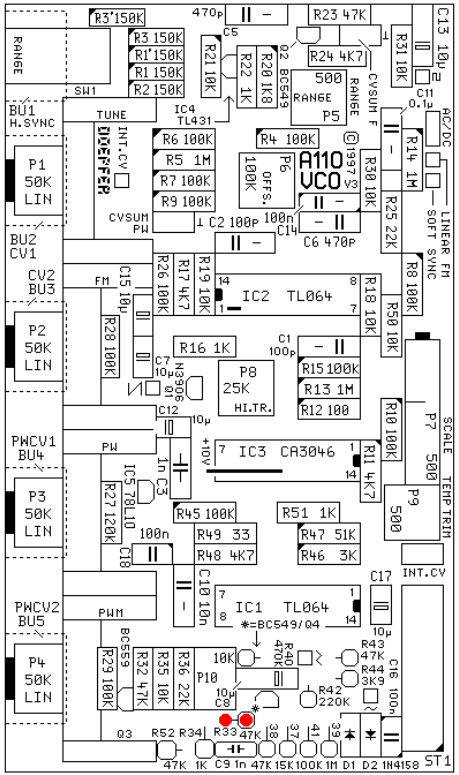

More examples:

A-120 24dB Transistor ladder low pass

resonance control : P5 // vactrol

A-145 Standard LFO

frequency control : R4 100k → 1M // vactrol

(// = parallel connection)

to be continued ...

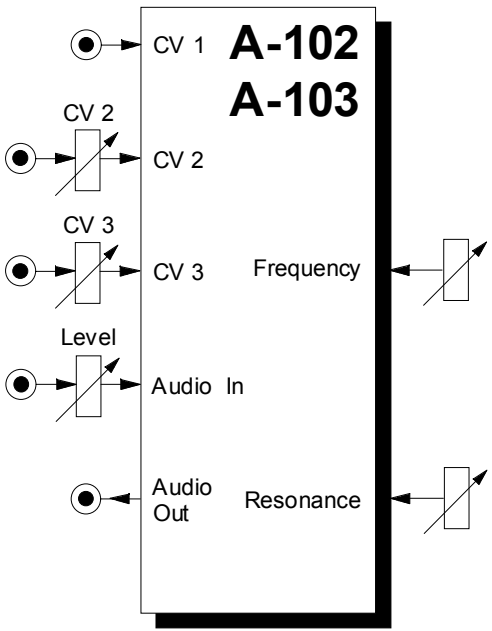

1. Introduction

Modules **A-102** and **A-103** are **voltage controlled low-pass filters** that filter out the higher parts of the sound spectrum and let lower frequencies pass through. Both filters very similar to the A-120 low-pass filter but sound very different. In contrast to the 24dB low-pass A-120 - that is based on the famous Moog transistor ladder - A-102 and A-103 use **different ladder types**. The **A-103** is an **18dB low-pass** that works with a **modified transistor ladder** identical to the circuit used in the Roland **TB-303** (base and collector of each transistor are connected). In the **A-102** the transistors in the ladder are replaced by **diodes** causing the typical **diode filter sound** with a very specific frequency and resonance behaviour.

The **cut-off frequency** determines the point at which filtering takes effect. You can control this manually, or by voltage control for both filters (**filter modulation**, for instance by an LFO). Three CV inputs are available, and the sum of the voltages from these affects the filter cut-off.

Resonance (or emphasis) is adjustable all the way up to self-oscillation - in which case the filter behaves like a sine wave oscillator.

2. Overview

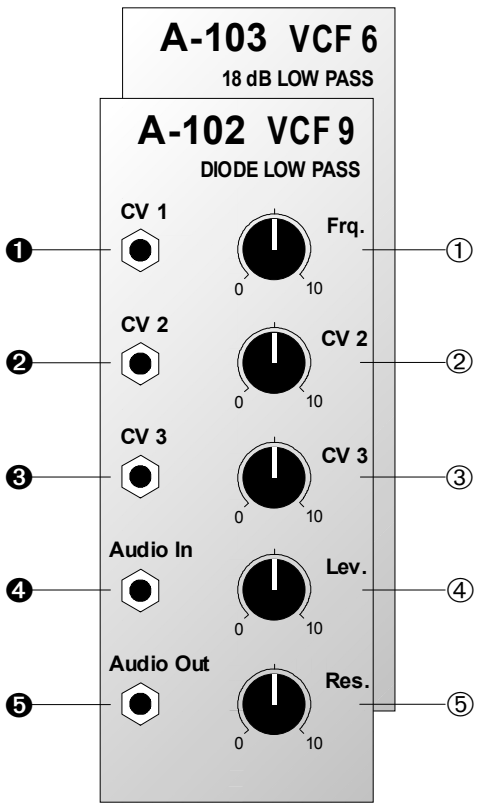

Controls:

① **Freq.**: Cut-off frequency control

② **CV 2**: Attenuator for CV at input ❷

③ **CV 3**: Attenuator for CV at input ❸

④ **Lev.**: Attenuator for audio input ❹

⑤ **Res.**: Control for setting the filter's resonance (emphasis)

In / Outputs:

❶ **CV 1**: Control Voltage input

❷ **CV 2**: ditto, level controlled by ②

❸ **CV 3**: ditto, level controlled by ③

❹ **Audio In**: Audio input to the filter

❺ **Audio Out**: Audio output from the filter

3. Controls

① Frq.

With this control you adjust the **Cut-Off Frequency f_c**, above which the filter attenuates all frequencies. At 10, the filter is fully open. The more you turn down this control, the more the high frequencies are filtered. The sound becomes mellower and less bright (see Fig. 1) until at 0 the filter is completely shut, and there will be no output signal at all.

② CV 2 • ③ CV 3

For voltage control or modulation of the cut-off frequency, use these CV inputs ❷ and/or ❸ (see Fig. 1). Use attenuators ② and/or ③ to adjust the **control voltage level**.

④ Lev.

Use this attenuator to control the amount of signal entering the filter input ❹.

☞ If the filter's output distorts, turn this control down, unless you deliberately want the sound as a special effect.

⑤ Res.

With this control you adjust the filter's **resonance** (*emphasis, Q*) - the parameter which emphasises the frequencies around the cut-off point f_C. Close to its maximum setting, the filter becomes so resonant that it goes into self-oscillation, and starts behaving like a **sine wave**. You can take advantage of this effect, and use the VCF as an additional oscillator.

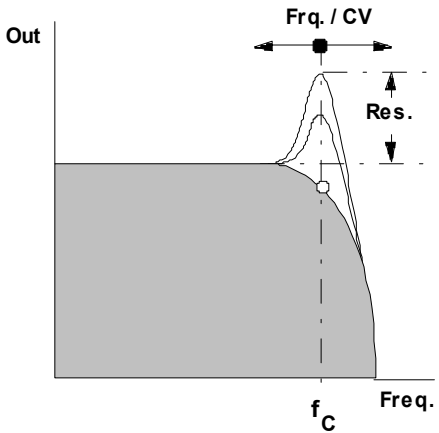

Fig. 1: Frequency response of the A-103

☞ For the **A-102** the filter parameters **frequency** and **resonance** are **not** completely **independent** from each other. This a special feature of this circuit and not a mistake !

4. In / Outputs

❶ CV 1

Socket CV 1 is the filter's standard **voltage control input**, and works on the 1V / octave rule, like the VCOs. If you patch a modulation source (eg LFO, ADSR) to this input, the cut-off frequency of the filter will be modulated by its voltage: ie., the sound color changes according to the voltage put out by the modulator. If you use the VCF as a sine wave oscillator, connect the pitch CV into this socket. Do the same if you want the filter's cut-off frequency to track exactly with the pitch of a note (**filter tracking**).

❷ CV 2 • ❸ CV 3

Sockets CV 2 and CV 3 are also **voltage control inputs for the filter.** Unlike CV 1, you can control the level of voltage - the intensity of modulation effect on the filter - with attenuators ② and ③.

❹ Audio In

This is the filter's **audio input** socket**.** Patch in the output from any sound source (eg. VCO A-110/A-111, Sampler/Wavetable Oscillator A-112, Subharmonic Generator A-113, Ring Modulator A-114, Audio Divider A-115, Waveform Processor/Waveshaper A-116/ A-136, Noise Generator A-117/118, external audio signal e.g. via A-119, VC Divider A-163, mixed signal of different audio sources using A-138 and so on).

❺ Audio Out

Filter output ❺ sends out the filtered signal.

5. User examples

As the A-102 and A-103 are very similar to the A-120 please refer to the user examples of the A-120. The filter's cut-off frequency can be modulated in various ways. The basic modulations types are:

- **VCF - LFO (A-145, A-146, A-147)**
  Cyclical changes of the **sound spectrum**
- **VCF - ADSR** (**A-140, A-141, A-142)**
  Modulation by an envelope results in triggered gradual change of the **sound spectrum**
- **VCF - Keyboard CV**
  This modulation produces pitch-related filter opening: the higher the pitch, the more the filter opens, and the brighter the sound becomes.

But even other voltage sources may be used to control the frequency of the A-102/103: e.g. Theremin A-178, Light-controlled CV A-179, Joy Stick A-174, MIDI-to-CV interfaces A-190 or A-191, Random Voltage A-118, S&H A-148, Sequencer A-155, Quantizer A-156, Foot Controller A-177, Ribbon Controller A-198 and many more. Please refer to the user's guides of these modules for details and additional examples.

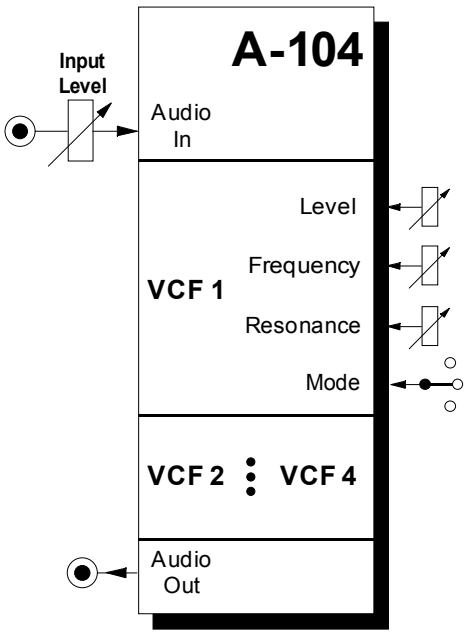

1. Introduction

Module **A-104** is a replica of the **Formant Filter** of the **"Mixtur Trautonium"** by Oskar Sala. It is made of **four parallel resonance filters** with common input and output (see fig. 1 on page 3). Each filter can be switched to **low pass** or **band pass** or off. **Frequency**, **resonance, mode** (band/low/off) and **level** are controlled for each filter separately by hand (no voltage control !). The frequency range for each filter is about 50Hz...5kHz.

The **input level** for all filters is controlled by an attenuator. The filter audio inputs are very sensitive so that distortion may intentionally be used to create new sounds - if desired.

The A-104 is a versatile module for **sound modification**. In the first place it is used for reproduction of **resonances** (e.g. the **vocal-like effects** known from the Trautonium). In combination with the **subharmonic generator A-113** one obtains the complete replica of the Trautonium sound generation.

More detailed information about the Trautonium can be found on our internet site www.doepfer.com.

2. TFF - Overview

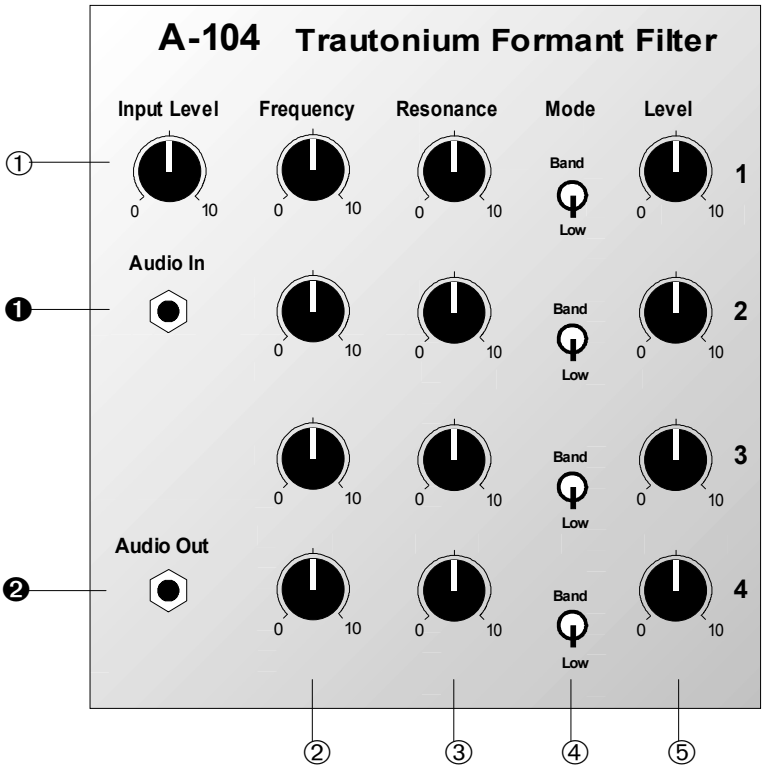

Controls:

① **Input Level** : Attenuator for audio input signal (effective for all filters)

For each VCF:

② **Frq.** : Frequency control

③ **Resonance** : Resonance control (Q, emphasis)

④ **Mode** : Mode switch (band/off/low)

⑤ **Level** : Level control (share of the filter signal in the mix output)

In- / Outputs:

❶ **Audio In** : Common filter audio input

❷ **Audio Out** : Common filter audio output

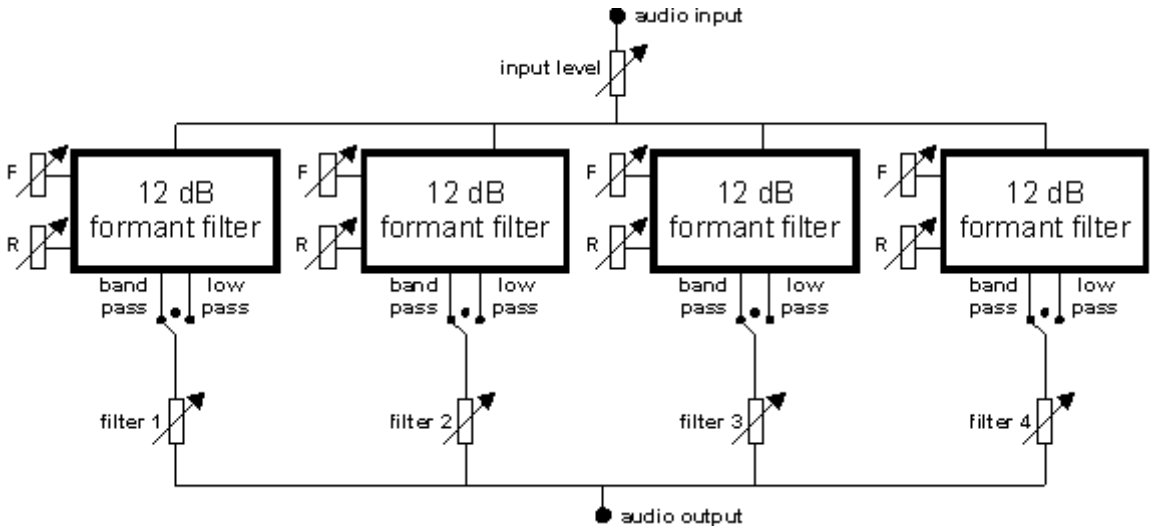

Fig. 1: Sketch of the A-104

3. Controls

① Input Level

Attenuator ① adjusts the **level** of the audio input signal applied to the audio input socket ❶. The attenuated signal is fed to each of the four resonance filters.

☞ The audio inputs of the filters are very sensitive so that **distortion** - even with normal A-100 audio levels (e.g. VCO A-110) - may intentionally be used to create new sounds. Distortion appears about from the middle position of the input level control ①.

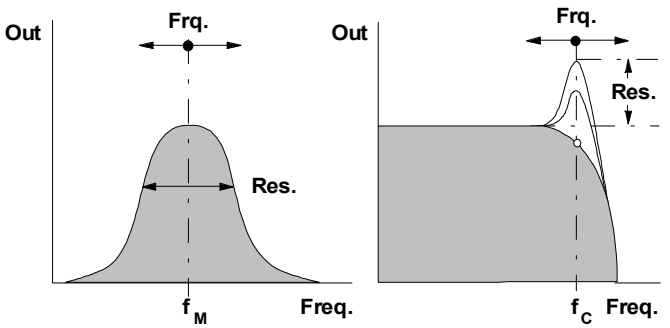

Fig. 2: Frequency response of band pass and low pass

② Freq.

Control ② is used to adjust the **filter frequency** (see fig. 2):

- In **band pass** mode i.e. the middle frequency $\mathbf{f_M}$
- In **low pass** mode i.e. the cutoff frequency $\mathbf{f_C}$

The frequency range for each filter is about 50Hz ... 5kHz (same as for the Trautonium filter).

③ Resonance

Control ③ is used to adjust the **filter resonance** (or emphasis or Q, see fig. 2):

- In **band pass** mode i.e. the **band width**
- In **low pass** mode i.e. **frequency emphasis** around the cutoff frequency

Self-oscillation - as for some other filters of the A-100 (e.g. A-120, A-121, A-122, A-123 and so on) - is not available.

④ Mode

The three-position switch ④ is used to select the **mode** of the corresponding filter:

- **band pass** (upper position)
- **off** (middle position)
- **low pass** (lower position).

⑤ Level

Attenuator ⑤ is used to adjust the **signal level** of the corresponding filter (share in the **mix** output socket ❷).

4. In- / Outputs

❶ Audio In

This is the filter's **audio input** socket**.** Patch in the output from the sound source (e.g. Subharmonic Generator A-113, VCO A-110/A-111, Noise Generator A-117/A-118, Mixer A-138).

❷ Audio Out

Filter output socket ❷ sends out the filtered signal, i.e. the **sum signal** of the four resonance filters.

5. User Examples

Module A-104 is used in the first place for the **simulation** of **resonances**.

Even **vowel-like effects** may be generated with this module (refer to the user's manuals of A-127 and A-128).

In combination with the **Subharmonic Generator A-113** one obtains a nearly complete replica of the **Trautonium sound generation** (refer to the user's manual of A-113 on page 11 for the complete sketch).

More detailed information about the Trautonium and the realization with A-100 modules can be found on our internet site www.doepfer.com.

A module that's related very close to the A-104 is the **A-127 Voltage Controlled Resonance Filter**. In contrast to the A-104 the filter frequencies are voltage controlled and each filter has an own LFO for frequency modulation. This enables automatic filter sweeps or multiple voltage controlled filtering (e.g. with sequencer or MIDI-to-CV interface).
For filter applications with fixed frequencies the **Fixed Filter Bank A-128** may be used.

6. Patch-Sheet

The following diagrams of the module can help you recall your own **Patches**. They're designed so that a complete 19" rack of modules will fit onto an A4 sheet of paper.

Photocopy this page, and cut out the pictures of this and your other modules. You can then stick them onto another piece of paper, and create a diagram of your own system.

Make multiple copies of your composite diagram, and use them for remembering good patches and set-ups.



- Draw in patchleads with colored pens.
- Draw or write control settings in the little white circles.

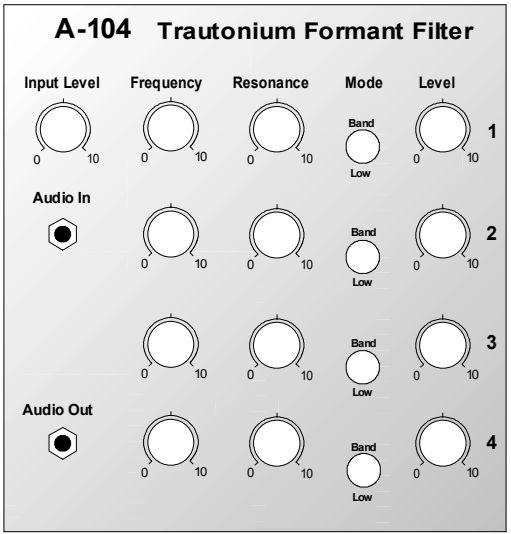

As the modules **A-105 and A-122** are identical with regard to operation and functions and differ only in the sound because of the different filter circuits (SSM2044 resp. CEM3320) both modules are combined in one common manual. Please refer to the **A-122** manual.

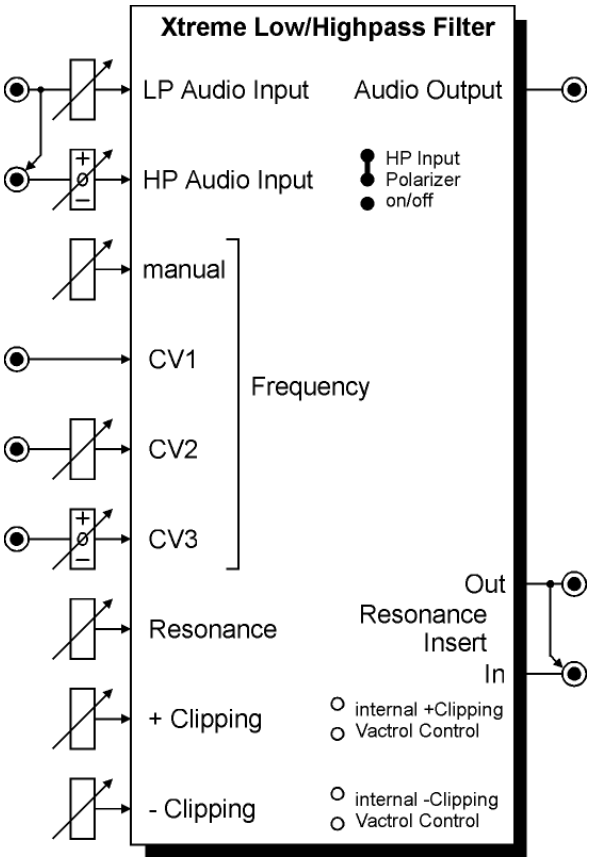

Fig. 1: A-106-1 Controls and In/Outputs

1. Introduction

Module A-106-1 is an unique low/high pass filter and has it's origin in our experiments to built a MS20 filter clone. In contrast to other filter designs it has different audio inputs for low and high pass, but only one audio output. The type of filter (12dB low pass, 6dB high pass or any mix) is defined by the shares of the audio signal fed to the corresponding inputs. Even two different audio signals can be used as low and high pass input. A special feature is the polarizer at the high pass input that allows to add/subtract the high pass to/from the low pass share, leading to *pseudo* band pass and notch responses (details concerning *pseudo* in the next chapter).

Another special feature are the clipping controls, which allow independent adjustment of the positive and negative clipping level. The resonance goes up to self-oscillation, but with a clearly different behaviour than on other filters. At certain resonance and clipping settings the self-oscillation generates rectangle or short sawtooth shaped pulses.

In general the A-106-1 is a very strange and awesome filter and far away from being perfect (e.g non-linear control scale, self-oscillation with all sorts of waveforms except sine, a lot of roaring, rattling, noise or other unpredictable sounds at high distortion and resonance settings, high distortion or audio level overrides the resonance, significant CV feedthrough …). But the A-106-1 has a lot of character – probably much more than any other filter of the A-100 – and is able to generate filter sweeps which are not possible with any other filter.

2. Basic Principles

As mentioned in the introduction, module A-106-1 has it's origin in our experiments to built a MS20 filter clone. The famous original MS20 included two filters: a 12 dB low pass and a 6dB high pass filter connected in series, both with a very special design.

Remark: The MS20 high pass if very often described as 12dB high pass, but this is not true.

During our research we found a way to use the same circuit simultaneously as low pass and high pass for 2 different audio signals (a bit similar to the A-101-1 Steiner Vactrol filter, which also has different audio inputs available, but with the special MS20 circuit). For this two separate audio inputs for **low pass** (LP) and **high pass** (HP) with separate level controls are available. The sockets are normalled, i.e. the signal applied to the LP input is available for the HP input too, provided that no plug is inserted into the HP input socket. The level control of the HP input is realized as a polarizer. This means that the signal can be added with the same polarity (+ range) or opposite polarity (- range) compared to the LP input. This feature enables *pseudo* notch (+) and *pseudo* band pass (-) filter functions too. From our point of view this is the most flexible solution as it enables these functions:

- Low pass: the audio signal is fed to the LP input, HP level control is set to zero, LP level control is set to the desired level
- High pass: the audio signal is fed to the LP or HP input, LP level control is set to zero, HP level control is set to the desired level (in this special case it does not matter if positive or negative amplification is chosen with the polarizer control)
- Low pass / high pass mix with one audio signal: the audio signal is fed to the LP input, LP and HP level controls are set to the desired levels.
  - special setting 1: if the level controls for LP and HP are set in a way that both levels are identical with the same polarity (i.e. + range of the HP level control) and no or little distortion only one obtains a *pseudo* **notch** filter (*pseudo* means that the notch is far away from being perfect, the attenuation in the pass band is not as good as for other filters of the A-100 system, please refer to the frequency response curves for details)
  - special setting 2: if the level controls for LP and HP are set in a way that both levels are identical with the opposite polarity (i.e. - range of the HP level control) and no or little distortion only, one obtains a *pseudo* **band pass** filter (*pseudo* means that even the band pass is far away from being perfect, there is a significant feedthrough of frequencies below and above the center frequency, please refer to the frequency response curves for details)

- Remark for settings 1 and 2: The original MS20 circuit was not planned for notch or band pass applications. The *pseudo* notch and *pseudo* band pass filters should be treated as a free bonus and have the disadvantages mentioned above. The reason is that the low pass has a 12dB/octave slope and the high pass has 6dB/octave. This leads to phase relations that do not allow a "perfect" band pass and notch simply by adding/subtracting signals as for other filter designs (for insiders: there remains always a 90 degree phase shift). For better notches and band passes other A-100 filters should be used - or two A-106-1 patched in series (band pass) or parallel (notch) with suitable frequency settings.

- Low pass and high pass with two different audio signals: the two audio signals are fed to the LP input resp. HP input and the level controls for LP and HP are set to the desired levels. For the +/- control of the HP input it is essential in this case if the two input signals are phase correlated (e.g. two different outputs of the same VCO or VCO output and a frequency divided signal derived from this VCO) or if there is no fixed phase correlation between the two signals (e.g. two different VCOs). In the first case the - and + range of the HP control leads to different filter results. In the second case there is no difference, if the + or - range of the HP control is used.

This design allows even some very special functions: It is e.g. possible to adjust the controls so that the LP signal does not distort, but the HP share does (or the other way round) - alternatively with the same or opposite polarity compared to the LP signal. For this the LP level has to be set to a small value so that the signal does not distort. The HP level control has to be set to a higher value (in the + or - range) so that the HP share will distort.
The variety of controls allows a lot of functions which are not available for any other filter we know.

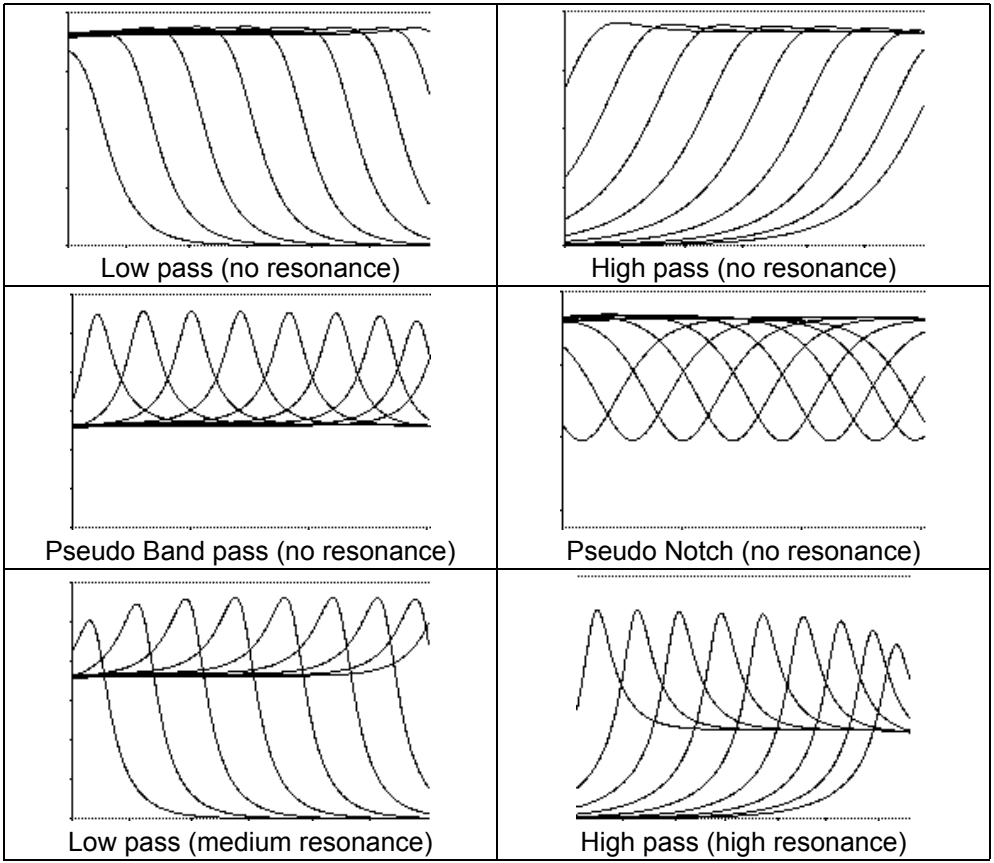

Fig. 2: A-106-1 Frequency Response Curves

During the A-106-1 development we found also that it might be useful to add controls not available on the original MS20 filters. In the original circuit the filter output level is limited to about +/– 0.7V by two antiparallel diodes across the output/resonance amplifier. Removing one or both diodes leads to noticeable different behaviour of the filter. We added two rotary controls CL+ and CL- to adjust the effect of each limiting diode (i.e. from original MS20 behaviour with fully active limiting diodes to no limiting effect). The independent control for each diode allows asymmetrical limiting/amplification that causes a completely new and sometimes very strange behaviour.

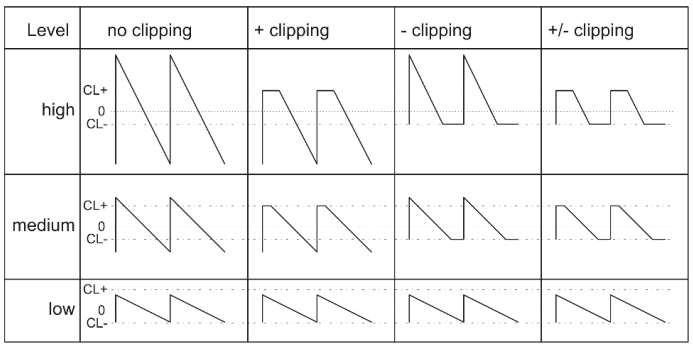

Fig. 3 : A-106-1 Clipping functions

One of the main effects of the asymmetrical limiting is that in self-oscillation the filter does not generate a sine wave but short pulses, if only one of the limiting diodes is activated. Another effect is that a higher output level of the filter can be obtained (which is limited to about +/- 0.7V for the original MS20 circuit). In addition dirty noise effects appear at certain combinations of the control settings for resonance, CL+, CL- and input level. The controls CL+, CL-, resonance, LP level and HP level have to be treated in a common context: if the input levels are small the CL+ and CL- controls will have no effect as the signal does not distort at all because it does not reach the clipping levels. Increasing the resonance also increases the audio level and the CL+/CL- controls may now have an effect on the output level without changing the input level !

Same applies if the resonance control remains unchanged while the input level increases. Now the CL+ or CL- control will have an effect as the level reaches the clipping thresholds. Increasing the audio level may also suppress the resonance if distortion becomes extreme. The "teamwork" of the five controls is very complex and has to be learned by doing and hearing.

The audio inputs are very sensitive to allow even extreme distortion effects, much more than possible for the original MS20.

The module is equipped with an insert option for the resonance feedback loop. This allows to insert other A-100

modules into the resonance circuit. The standard application is to insert a VCA for voltage controlled resonance. But even other modules - e.g. waveshaper, divider, phaser, distortion, PLL, wave multiplier, spring reverb, ring modulator, frequency shifter, BBD or any other audio processing module - can be inserted to obtain sounds one has probably never heard before.

On top of this the module is equipped with three frequency control voltage inputs (CV). One CV input is equipped with a polarizer. This means that the effect of the external CV (e.g. envelope from an ADSR generator) to the filter frequency is positive (+ range) or negative (- range). Especially when the filter is moved from LP to HP it might be useful to invert the polarity of the envelope CV. It has to be pointed out that the frequency response is far away from being 1V/oct but rather non-linear.

Pay attention that the CV3 and high pass level controls are polarizers with zero level at the center position. Especially for the high pass control it is a bit tricky to find the neutral position. Here are two solutions for this problem:

- Insert an unconnected patch cable or a single 3,5 mm jack plug into the high pass input (the two terminals of the plug may even be shortened). For this reason a 30 cm patch cable is added to each A-106-1 module for free. You may even nip off the jack plug of the cable to have it available especially for this function.
- Change the high pass polarizer into a normal attenuator by moving the jumper JP4 to the lower position (see below)

Pay attention that for pure low pass function of the module the high pass control "HP level" has to be in the neutral position or even better a dummy plug is inserted into the high pass input "HP In".

To obtain the filter section of the original MS20 two A-106-1 have to be patched in series (one in LP mode, the other in HP mode, both with CL+ and CL- set to zero).

The A-106-1 is far away from being a "perfect" filter in an academic sense. The control scale is non-linear. With self-oscillation all sorts of waveforms except sine are generated. High distortion and resonance settings lead to roaring, rattling, noise or other unpredictable sounds. High distortion or audio level may "kill" the resonance at certain settings. The filter has a significant control voltage feedthrough. The "band pass" is not a real band pass as a considerable share of all frequencies passes through. The notch filter does attenuate only about 50% at the center frequency - and many more specialties. But the A-106-1 has a lot of character - much more than any other filter of the A-100. It is a very strange and awesome filter - somehow quite the opposite of the 48 dB ladder filter A-108, which is a very smooth, warm and predictable filter. The A-106-1 is definitely not the right choice for "moogish" or "civilized" sounds but for extreme, exceptional and experimental sounds - this is why we call the module "*X-filter*", also to

avoid troubles with the Korg company who is the owner of the term "MS20". If you want to know more technical details please look at the document “A-101-1 technical details” on our website www.doepfer.com (available from the A-101-1 or A-106-1 info page). In this document the basics of the A-101-1 (Steiner) and A-106-1 ((Xtreme) filters are described.

There are two **jumpers** on the module.

- The first jumper is located on the main board A (the right one with the CL+/CL-/Res. controls) and labelled **JP7A/B**. In the upper position A (factory setting) the output is unbuffered and has a noticeable DC offset (DC coupled). Unbuffered means that the output load affects the filter behaviour. In the lower position B the output is buffered and has no DC offset (AC coupled). If unexpected behaviour of the A-106-1 output appears try the lower position (buffered mode).
- The second jumper is located on board B (the left one with the frequency and audio input controls) and labelled JP4. It is a bit difficult to find as it is located behind the 10 pin connector that is used to connect the two boards. It is recommended to remove the female 10 pin connector to change the setting of this jumper. In the upper position (factory setting) the high pass control "HP Lev" works as a polarizer (zero = center position). In the lower position it works as a normal attenuator with zero at the fully counterclockwise position. If you do not want to use the polarizer function (i.e. add/subtract the LP and HP signals) it is recommended to move the jumper to the lower position. But in this case the (-)/(+) front panel printing for the HP level control is no longer valid.

Clipping control option:

The module is prepared to control the CL+ and CL- parameters by using the universal vactrol module A-101-9. Two pin headers (JP5, JP6, located behind the CL+ control) are used to establish a connection to the universal vactrol module A-101-9. This allows voltage control of CL+ and CL- . Please refer to the manual of module A-101-9 for details.

3. Overview

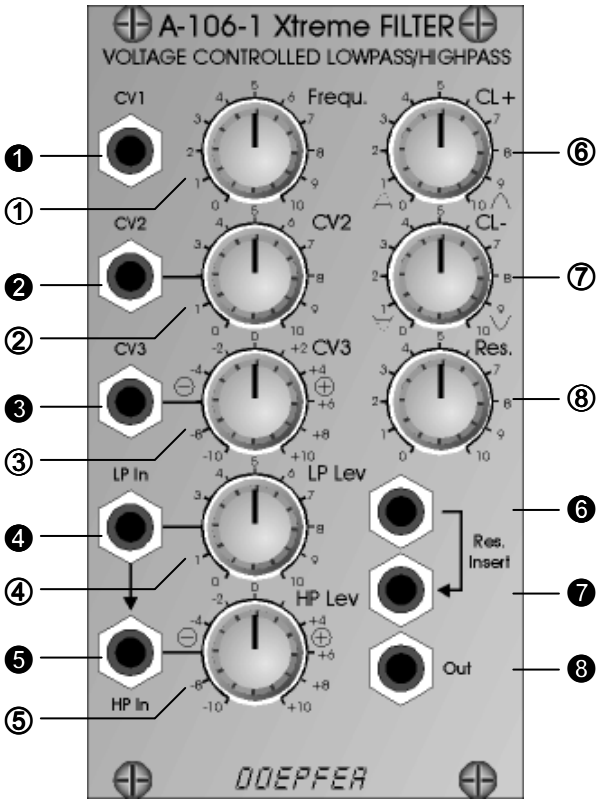

Fig. 4: front panel

Controls:

① Frequ. :	manual frequency control
② CV2:	attenuator for CV2
③ CV3:	polarizer for CV3
④ LP Level:	low pass audio input attenuator
⑤ HP Level:	high pass audio input polarizer/ attenuator (*)
⑥ CL+:	positive clipping control
⑦ CL–:	negative clipping control
⑧ Res.:	resonance level control

In- / Outputs:

❶ CV1:	CV1 input (without attenuator/polarizer)
❷ CV2:	CV2 input (with attenuator)
❸ CV3:	CV3 input (with polarizer/attenuator) (*)
❹ LP In:	low pass audio input
❺ HP In:	high pass audio input (normalled to low pass audio input ❹)
❻ Res. Insert:	resonance insert (output)
❼ Res. Insert:	resonance insert (input)
❽ Out:	audio output

(*) function depends upon jumper settings

Width: 14HP
Current: 30 mA

4. Controls and In- / Outputs

❶	CV1:	CV1 input
①	Frequ. :	manual frequency control
❷	CV2:	CV2 input
②	CV2:	attenuator for CV2
❸	CV3:	CV3 input
③	CV3:	polarizer/attenuator for CV3

This group of elements is responsible for the filter frequency. Knob ① *Frequ.* is used to adjust the frequency manually. Three CV inputs (CV1 ❶, CV2 ❷, CV3 ❸) are available to control the frequency by external control voltages (e.g. ADSR, LFO, random, sequencer). The sensitivity of CV1 is fixed, CV2 is equipped with a normal attenuator ②, CV3 with a polarizer ③. The neutral position of the polarizer knob is at it's center (0). Left from the center (area marked with a minus sign) the effect of the CV3 is negative, i.e. an increasing CV3 decreases the frequency. Right from the center (area marked with a plus sign) it's positive, i.e. increasing CV3 increases the frequency.

The control scales of the three CV inputs are non-linear, i.e. not 1V/octave as CV inputs of many other A-100 modules.

❹	LP In:	low pass audio input
④	LP Level:	low pass audio input attenuator
❺	HP In:	high pass audio input
⑤	HP Level:	high pass audio input polarizer/ attenuator

Socket ❹ is the low pass audio input (LP In) with the assigned attenuator ④. Socket ❺ is the high pass audio input (HP In) with the assigned polarizer ⑤. This polarizer can be converted into a normal attenuator by changing an internal jumper (please refer to page 7 for details).
The HP In ❺ is normalled to the LP In ❹, i.e. if no plug is inserted into the HP In ❺ the signal applied to the LP In ❹ is also used for the high pass section.
For pure LP function the HP Level ⑤ has to be set approximately to it's center position. The best way to find the neutral positon of the HP control is by hearing. Move the control until the high pass share disappears in the audio output signal. As it is a bit tricky to find the neutral position even a dummy plug can be inserted into the HP In socket for pure LP applications. In this case the normalling between the sockets LP In and HP In is interrupted.
Both the LP and the HP audio input are very sensitive. With standard A-100 signals (e.g. VCO) distortion appears already at medium settings. But the distortion also depends upon the clipping and resonance settings.

⑥ CL+: positive clipping control
⑦ CL–: negative clipping control

This controls are used to adjust the upper and lower clipping levels of the filter circuit. At the left position the smallest clipping level is chosen, i.e. clipping appears even at small input levels. Turning a clipping control clockwise increases the clipping level and clipping occurs just at higher levels. The adjustment of the clipping controls also affects the max. output level as for higher clipping levels even the max. output level becomes higher.
The module is prepared to control the clipping functions with voltages by using the universal vactrol module A-101-9. For details please refer to page 7 and the A-101-9 user's manual.

❻ Res. Insert: resonance insert (output)
❼ Res. Insert: resonance insert (input)
⑧ Res.: resonance level control

This group of elements is responsible for the resonance functions of the module. Socket ❼ is the input of the resonance loop and is normalled to resonance output socket ❻. If an external module is used to control the resonance loop (e.g. a VCA), this module has to be inserted between socket ❻ and socket ❼. The resonance control ⑧ is used to adjust the resonance level manually. Resonance can be increased up to self-oscillation. As already mentioned in chapter 2 the controls for level, resonance and clipping influence each other. E.g. the waveform generated in self-oscillation mode depends upon the settings of the clipping controls and the resonance, or self-oscillation is reduced or even "killed" by an excessive audio level.

❽ Out: audio output

This socket is the audio output of the module.

5. User Examples

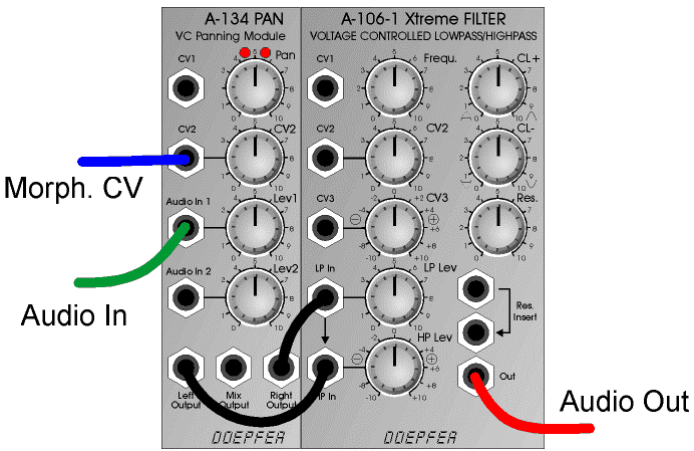

Voltage Controlled Morphing between LP and HP

A voltage controlled panning module A-134 is used to control the shares of the audio signal fed into the LP and HP inputs of the A-106-1. With an external voltage (Morph. CV) the relation between LP and HP is adjusted (e.g. LFO, ADSR, sequencer, random or S&H, Theremin).

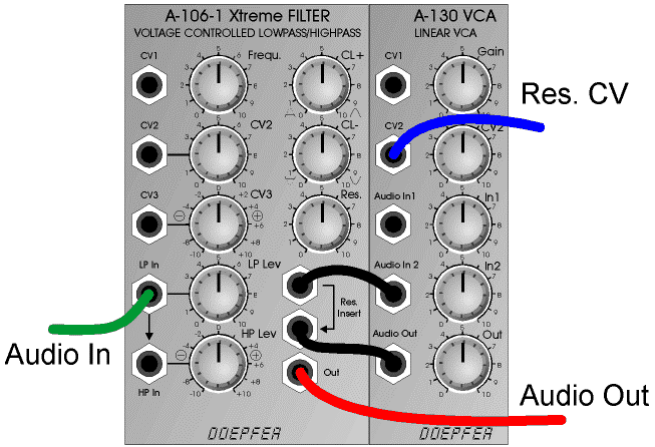

Voltage Controlled Resonance

The resonance insert is processed by a VCA A-130 to obtain voltage controlled feedback. Instead of a VCA even other signal processing modules can be used (e.g. BBD, VC polarizer, waveshaper/wave multiplier, spring reverb, PLL) for special effects.

On our web site www.doepfer.com several A-106-1 sound examples are available.

1. Introduction

Module A-107 is a completely new **voltage controlled filter** that has available **36 filter types**: different versions of low pass, high pass, band pass, notch, all pass and filters with new response curves that have no name up to now.

Of course the standard VCF controls are available: **manual and voltage control** of **filter frequency** and **resonance.** For the filters of the first group (1...18) **self-oscillation** is possible, the filters of the second group (19...36) do not feature self-oscillation. On top of it a final **VCA** is available - even with manual and voltage control. All external control inputs are available twice: one with attenuator and one without.

The 36 filters are organized in **two groups of 18 filters** each. The filters can be arranged in 64 different **filter chains**. Each chain consists of **32 steps**. The sequence of a filter chain is passed through while the manual control is operated or the external control voltage changes from 0...+5V. **64 filter chains** can be programmed by the user and stored in the non-volatile memory of the module.

The **transition** between filters can be **soft (morphing)** or **hard (switching)**. The morphing time (manual and voltage controlled) defines the transition time between succeeding filters from a few milliseconds (switching) up to about 10 seconds.

Additionally a **"clocked" mode** is available. This means that the steps of the currently selected filter chain are selected one after another. Each **positive transition of the Clock** signal calls up the next filter of the chain. A positive trigger at the **Step Reset** input resets to the filter of the chain that corresponds to the momentary step CV. This allows e.g. to switch between the filters of the currently selected filter chain in sync with a sequencer.

The filter design is **100% analog** (CEM filter chip). Only the morphing control and memory managing is carried out by a microcontroller.

Remark: Because of technical reasons the transition between the two filter groups cannot be carried out soft as capacitors have to be switched. Soft transition (i.e. morphing) is possible only between the filters of each group (i..e. within the filters 1...18 or 19...36). Switching between filters causes a "click" if the filters are from different groups.

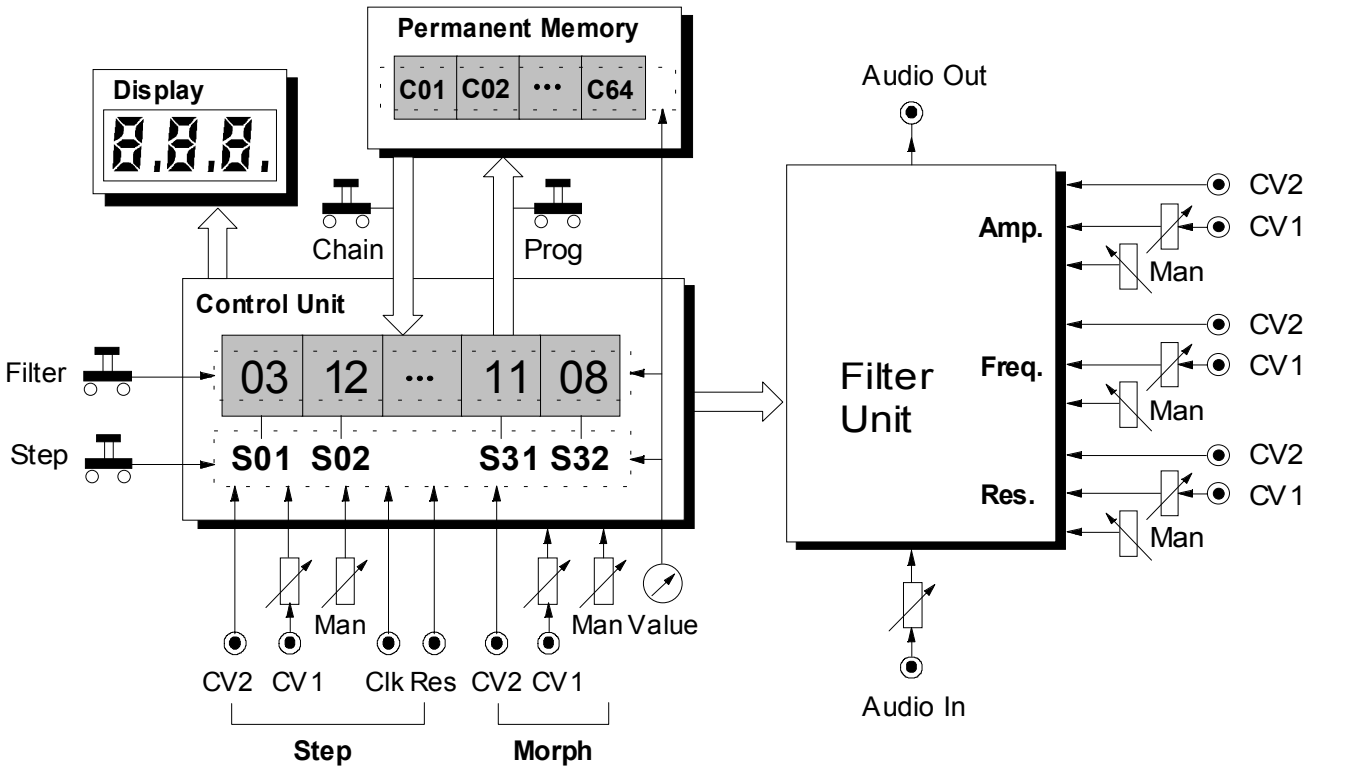

Fig.1: A-107 Overall view

2. Basic principles

Module A-107 consists of the 100% analog **filter unit** with the parameters filter frequency, resonance/emphasis and amplification, and the digital **control unit** with **display,** corresponding controls (buttons, rotary encoder) and **non-volatile memory.**

The control unit manages the **memory** that contains the 64 **filter chains** with 32 steps each. The control unit is responsible for all parameters that refer to switching and morphing of filters within the selected chain, the control of the analog filter unit to obtain the desired filter and the memory management.

The buttons "Step" and "Filter" determine if the display shows the Step number (S) within the currenty selected filter chain (i.e. the so-called working buffer) or the filter type (F).

The buttons "Chain" and "Prog" are used to transfer a filter chain between the non-volatile memory (64 memories) and the working buffer.

The values for Step, Filter and Chain are set by the endless rotary encoder labelled “Value”.

Provided that a clock signal is applied to the Step Clock input the **clocked mode** is activated. In this mode each positive transition of the clock signal triggers the advance to the next step of the filter chain in the working buffer. If step 32 is reached the next clock switches back to step 1 of the chain.

Addressing the filters of the chain in the working buffer can also be controlled by the **manual step** control and/or an external **control voltage** at one of the Step CV inputs. According to the manual setting and the external voltage(s) the corresponding filter within the chain is addressed.

For both the clocked and CV addressed mode the transition time between succeeding filters can be controlled manually by the **Morphing control** and/or an external **control voltage** at one of the Morphing CV inputs.

Attention: CV addressing "overruns" the filter selected in the clocked mode.

All parameters can be controlled resp. modulated by different voltages at the same time: **filter step**, **morphing time, filter frequency**, **resonance** and **amplification**.

3. Overview

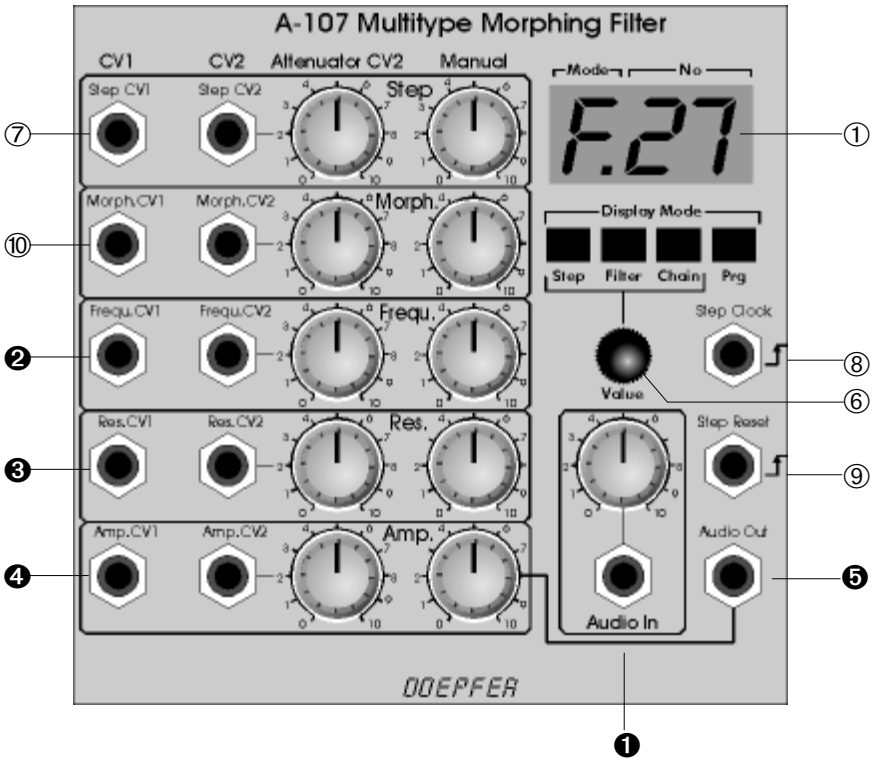
A-107 Multitype Morphing Filter
CV1
CV2
Attenuator CV2
Manual
Step CV1
Step CV2
Step
Morph.CV1
Morph.CV2
Morph.
Frequ.CV1
Frequ.CV2
Frequ.
Res.CV1
Res.CV2
Res.
Amp.CV1
Amp.CV2
Amp.
Mode
No
F.27
Display Mode
Step
Filter
Chain
Prg
Value
Step Clock
Step Reset
Audio Out
Audio In
DOEPFER
①
②
③
④
⑤
⑥
⑦
⑧
⑨
⑩

Programming Unit Controls:

① **Display**: 3 digit LED display

② **Step**: button, calls up display mode "Step"

③ **Filter**: button, calls up display mode "Filter"

④ **Chain**: button, calls up display mode "Chain"

⑤ **Prog**: button, calls up display mode "Prog"

⑥ **Value**: rotary encoder to set the value for Step, Filter and Chain

⑦ **Step**: two CV inputs with/without attenuator, and manual control for Step setting

⑧ **Step Clock**: digital signal input for clock/gate-triggered advance to next step

⑨ **Step Reset**: digital signal input to set the step to a position within the chain defined by the momentary step CV

⑩ **Morph**: two CV inputs with/without attenuator, and manual control for morphing time

Filter Unit Controls:

❶ **Audio In**: audio input of the filter

❷ **Freq.**: two CV inputs with/without attenuator, and manual control for filter frequency

❸ **Res.**: two CV inputs with/without attenuator, and manual control for filter resonance/emphasis

❹ **Amp.**: two CV inputs with/without attenuator, and manual control for filter amplification

❺ **Audio Out**: audio output of the filter

4. Programming Unit Controls

① Display

This is a 3-digit LED display with three decimal points. These display modes are available:

S01 current **Step** within the filter chain (= working buffer), range 01 - 32

F01 **Filter type** of the currently selected step within the chain (= working buffer), range 01 - 36

C01 number of the **Chain** that is called up from the memory, range 01 - 64

P01 number of the chain that is used to store (**P**rogram) the working buffer into the memory, range 01 - 64 (the character "S" is alread used for Step -> P = Program)

The **left and middle decimal point** of the display indicate **morphing**. The points are flashing alternately while the morphing is in progress. The blinking frequency is an approximate measure for the morphing time. As soon as the new filter type is reached both points turn off.

The **right decimal point** is a **warning indicator** for the functions CHAIN and PRG and is blinking as soon the button ④ or ⑤ is operated (see below).

② Step

Operating this button calls up the display mode that shows the **current step** of the chain in the working buffer.

There are different was to select another step within the chain:

- Operate the **Value control** ⑥
- Operate the **manual Step control** (see ⑦)
- Altering one of the the **Step CVs** (see ⑦)
- Feeding a **Clock signal** to socket ⑧.

The first two items relate to manually controlled steps. The two last items correspond to voltage resp. clock controlled step addressing and are suitable for automatic filter addressing and morphing (e.g. controlled by a LFO, ADSR, random CV, Theremin, ribbon, foot controller. MIDI-to-CV or a sequencer).

③ Filter

Operating this button calls up the display mode that shows the **filter type** of the currently selected step of the chain in the display.

To select another filter type the **Value** control ⑥ has to be operated. A detailed **list of all filter types** with frequency response curves is available in chapter 7.

☞ The filters are organized in **two filter groups** with 18 filters each. To obtain a **continuous morphing** (soft transition) for all filters within a chain only filters from the same group have to be used. If two succeeding filters are from different groups a short "click" will be heard as capacitors have to be switched between the filter groups. Of course this characteristic can be used intentionally for special effects.

How to program a filter chain:

❒ Make sure that no external control signals are fed into the inputs Step CV ⑦, Step Clock ⑧ and Step Reset ⑨. These signals would disturb the programming procedure as they change the current step within the chain !

❒ Operate the Step button ② and select the desired step (e.g. S01) within the current filter chain (working buffer) by using the value control ⑥.

❒ Operate the Filter button ③ and select the desired filter type (e.g. F13) for the current step by using the value control ⑥.

❒ Select the next step (e.g. S02) by operating the Step button ② and assign the filter type for this step as described above

❒ Continue until all steps are programmed. It is not necessary to program all 32 steps of a chain. If you e.g. want only 5 different filters you may only program the steps 1...5. But you have to pay attention that only these programmed steps are addressed later e.g. by the external CV (use the attenuated CV input !)

☞ If you want to keep the chain in the working buffer before you modify the settings you have to store the working buffer into one of the 64 non-volatile memories (see item ⑤ PROG).

☞ The working buffer is erased during power off. If you want to keep the working buffer you have to store it into one of the 64 non-volatile memories (see item ⑤ PROG). After power on chain #1 is called up from the non-volatile memory.

④ Chain

Operating this button **calls up a chain** from the memory, i.e. the chain is copied from the non-volatile memory into the working buffer. To avoid wrongly operation one has to keep the button pressed for about one second before the function is executed.
The display shows the number of the last chain in use (e.g. C23) and the **right decimal flashes slowly** as a **warning** that the chain in the working buffer will be overwritten if the process is continued.
If the chain button was operated wrongly one simply has to operate the Step button ② or the Filter button ③ to reach the corresponding display mode.
How to **copy** a chain from the memory into the working buffer:

- ❒ Select the **number of the desired chain** by means of the **Value control** ⑥.
- ❒ Operate the **Chain button again** and hold it pressed for about **2 seconds**.

GET During this time the right decimal points flashes fast and the display shows GET.

☞ If you release the chain button while the display shows "GET" the copy procedure is interrupted and the right decimal point flashes slowly again.

After about 2 seconds the chain is copied from the non-volatile memory into the working buffer.

⑤ Prog

Operating this button **stores a chain** into the memory, i.e. the chain is copied from the working buffer non-volatile memory. To avoid wrongly operation one has to keep the button pressed for about one second before the function is executed.
The display shows the number of the last chain in use (e.g. P19) and the **right decimal flashes slowly** as a **warning** that the chain in the memory will be overwritten if the process is continued.
If the chain button was operated wrongly one simply has to operate the Step button ② or the Filter button ③ to reach the corresponding display mode.
How to **store** a chain into the non-volatile memory:

- ❒ Select the **number of the desired chain** by means of the **Value control** ⑥.
- ❒ Operate the **Chain button again** and hold it pressed for about **2 seconds**.

PRG During this time the right decimal points flashes fast and the display shows GET.

☞ If you release the button while the display shows "PRG" the store procedure is interrupted and the right decimal point flashes slowly again.

After about 2 seconds the chain is stored into the selected chain of the non-volatile memory and the display shows the latest step.



This operation concept makes it possible to copy chains within the non-volatile memory.

To copy e.g. chain 17 to chain 53 one has to copy chain 17 by means of the CHAIN function into the work buffer. Then the working buffer is stored into chain 53 by means of the function PROG.

⑥ Value

This **endless rotary encoder** is used to select steps, filter types and chains as described in the sections above.

☞ If an external Step CV or Step clock signal is applied the effects of the external signals and the value control will interfer. To select a value with the **Value** control no step CV or step clock should be applied.

⑦ Step

This group of controls serves to **address a step** within the currently selected filter chain. It contains a **manual Step** control and two **Step CV inputs** (one with attenuator, one without attenuator).

A variable control voltage applied to a Step CV input leads to a step selection and consequently filter selection accordingly to the applied control voltage. The setting of the **Morphing** section defines if the transition time between succeeding steps. resp. filters.

A control voltage of 0V at Step CV input 2 corresponds to step 01, +5V to step 32.

The effects of the manual step control and the external step CV inputs are added up. The manual control can be used to adjust an **offset** (e.g. step 16). The external control voltage (e.g. from a LFO) could modulate the step value around the offset (e.g. 11...21 = 16-5 .... 16+5). For bipolar control voltages (e.g. from an LFO) an offset is required to take advantage of the full voltage range. For positive control voltages (e.g. from an ADSR, sequencer or MIDI-to-CV) the offset control may be set to zero.

⑧ Step Clock

The positive transition (low to high) of a **Clock signal** at this input advances to the **next step of the current chain.**

If step 32 is reached the next clock switches back to step 1 of the chain.

☞ If an external Step CV and Step clock signal is applied the effects of both signals will interfer. Whenever the step control voltages changes the step corresponding to this voltage is addressed immediately !

Therefore we recommend to apply no varying control voltages to the Step CV inputs in the clocked mode unless the interfering effects are intentional.

⑨ Step Reset

The positive transition (low to high) at this input **resets to the step** of the chain that corresponds to the **momentary step CV** (manual + external). The manual step control has to be turned to zero if a reset to step 1 is desired. A slowly varying external control voltage at the step CV inputs can be used to reset to different steps.

The step reset input is also helpful to synchronize "filter sequences" by applying a sequener generated reset signal to this input (e.g. .

⑩ Morph

This group of controls serves to define the **morphing time** between succeeding filters. It contains a **manual Morphing** control and two **Morphing CV inputs** (one with attenuator, one without attenuator).

Applying a **slowly variable control voltage** at one of the Morphing CV leads to modulations of the morphing time.
A control voltage of 0V at Morphing CV input 2 corresponds to a few milliseconds (~ switching), +5V to about 10 seconds morphing time.

The effects of the manual morphing control and the external morphing CV inputs are added up. The manual control can be used to adjust an **morphing offset**. The external control voltage (e.g. from a LFO or sequencer) could modulate the morphing time the offset. For bipolar control voltages (e.g. from an LFO) an offset is required to take advantage of the full voltage range. For positive control voltages (e.g. from an ADSR, sequencer or MIDI-to-CV) the offset control may be set to zero.

5. Filter Unit Controls

❶ Audio In • Level Control

The socket is the **audio input** of the filter were the audio signal has to be fed in. The attenuator controls the **input level** of the signal to be filtered. If the filter's output signal is distorted, turn this control down, unless the distortion is wanted as a special effect. Distortion appears approx. above middle position of the control (~5) for normal A-100 signals (e.g. VCO A-110).

❷ Frequency

This group of controls serves to define the **filter frequency**. It contains a **manual frequency** control and two **frequency CV inputs** (one with attenuator, one without attenuator).

The **filter frequency** is manually adjusted with the manual frequency control. To modulate the cut-off frequency by an **external voltage** (e.g. from a LFO or ADSR) the control voltage has to be patched into one of the two **frequency control inputs**. One input is equipped with an attenuator to control the frequency modulation amount of the corresponding input.

The **effect of filter frequency** depends upon the **filter type** that is selected with the programming unit. In case of a lowpass or high pass it is the cut-off frequency, for a bandpass or notch it is the middle frequency. More details can be found in the manuals of other A-100 filters (e.g. A-121, A-123, A-124, A-108, A-105/122).

❸ Resonance

This group of controls serves to define the **filter resonance/emphasis**. It contains a **manual resonance** control and two **resonance CV inputs** (one with attenuator, one without attenuator).

The **filter resonance** is manually adjusted with the manual resonance control. To modulate the resonance by an **external voltage** the control voltage has to be patched into one of the two **resonance control inputs**. One input is equipped with an attenuator to control the resonance modulation amount of the corresponding input.

According to the selected filter type the resonance effect **emphasizes** the **frequencies** around the cut-off frequency (lowpass, highpass) or alters the bandwidth (bandpass, notch). For the **new filters** without names

normally **one of the frequency peaks** shown in the response curves is **lifted up** (see chapter 7).

For the **filters 01 ... 18** (see chapter 7) the resonance can be adjusted right up to **self-oscillation**, in which case the filter will behave like a sine wave oscillator. The filters 19...36 do not support self-oscillation.

Even the effect of resonance and self-oscillation is treated more detailed in the manuals of other A-100 filters (e.g. A-121, A-123, A-124, A-108, A-105/122).

❹ Amp.

This group of controls serves to define the **filter amplitude or level**. It contains a **manual amplitude** control and two **amplitude CV inputs** (one with attenuator, one without attenuator). This control group is assigned to the final VCA (nothing but an exponential VCA that is connected to the filter output).

The **filter output level** is manually adjusted with the manual amplitude control. To modulate the amplitude by an **external voltage** (e.g. ADSR, LFO, sequencer) the control voltage has to be patched into one of the two **amplitude control inputs**. One input is equipped with an attenuator to control the resonance modulation amount of the corresponding input.

❺ Audio Out

Filter output ❺ sends out the filtered and level controlled audio signal.

6. User examples

☞ In the following we use the abbreviations LP (lowpass), BP (bandpass), HP (highpass), AP (allpass), NF (notch filter).

Before you continue with more complex applications of the A-107 we recommend to acquaint with the 38 filter types described in chapter 7. Take the time to hear all the filters and how they respond to filter frequency, resonance and distortion. Find out how morphing between 2 filters is influenced by the morphing time. Differences in loudness can be compensated with the amplitude control.

The easiest application is to **use only one single filter** from the pool of 38 filters. This makes quite sense as there are a lot of filters available that cannot be realized with other A-100 modules (e.g. the "fast food filter" no. 09, look at response curve to understand the name "fast food"). But the point of the A-107 are of course the filter chains and the morphing features. In the following we describe some suggestions:

Clocked mode

The advance to the next filter in the chain can be triggered by different events. Here some examples:

- Advance triggered by a **keyboard** by using the gate signal as step clock
- Advance triggered by manually operated control devices like **foot switches** (A-177), **Theremin** (gate output of the A-178), **light controller** (gate output of the A-179), **ribbon controller** (gate output of the A-198)
- **Random advance** with the Random Clock Generator A-117 or A-149-2 (or via CV with the A-118 random CV output or one of the outputs of A-149-1)
- **Periodical advance** with the rectangle output of a LFO, any clock signal or in sync with MIDI clock (clock out of the A-190 divided by the clock divider A-160 to obtain a smaller clock frequency)
- **Rhythmical advance** by means of **clock divider and sequencer** A-160/161, combined e.g. with the **logic module** A-166 and using the step reset input of the A-107,
- **more complex rhythmical filter sequences** by controlling the step clock by the trigger output of a **analog sequenzer (A-155** or **MAQ16/3**) or a **trigger sequenzer (Schaltwerk)**

Morphing

But the real fun arises with the morphing features of the A-107. Even here we recommend first to find out the sound behaviour between two different filters as it is a big difference to morph e.g. from 6dB LP => 24 dB LP, or LP => HP, or BP => NF, or HP => AP and so on. For this you may use the following system:

- ❒ Program a chain with two different filter types at step 01 and 02.
- ❒ Patch the rectangle output of a LFO to the step CV2 input of the A-107 and adjust the frequency of the LFO to about 1 Hz or less.
- ❒ Turn the manual step control, the attenuator of step CV2 and the manual morph control to zero.
- ❒ Select the display mode STEP.
- ❒ Look at the display and turn up the attenuator control of step CV2 slowly until the display shows alternately 01 and 02.
- ❒ Feed the audio input of the A-107 with the desired audio signal. The sawtooth output of a VCO is a good start but even a complex audio signal is suitable for the first tests
- ❒ Set the controls of the filter section to suitable positions: full amplitude, medium filter frequency, small or medium resonance
- ❒ Now you will hear alternatively the two filters that were programmed to step 01 und 02 of the chain (see first item above),
- ❒ Turn up slowly the morph control to find out how the switching between the two filters turns more and more into morphing.
- ❒ Alter the setting of the filter section (filter frequency, resonance, amplitude) to hear the effect of these controls
- ❒ Increase the LFO frequency that controls the step CV. From a certain LFO frequency (depends upon the setting of the morphing time) the filters of step 01 and 02 will not be reached as the morphing time is longer than the LFO period. Instead of this one obtains an "interim" filter that has a bit of both filters
- ❒ Use other control voltage sources (e.g. LFO, ADSR, Random CV) to control the parameters of the A-107 by external voltages: morphing time, filter frequency, filter resonance, amplitude
- ❒ Extend the filter chain by adding filters to step 03, 04, 05 ... and try different filter types in the chain

Now you should experiment with a real filter chain (so far only two filters were used) and try more sophisticated controls:

- ❒ Extend the filter chain by adding new filters to step 03, 04, 05 ... and try different filter types in the chain. You may also use the factory setting of the chains (step 1 = filter 2, step 2 = filter 2 ...)

- ❒ Try different waveforms for the LFO that controls the step CV and increase the effect of the step CV by turning up the attenuator. This increases the range of filters that were covered by the LFO CV.
- ❒ Adjust LFO frequency and attenuation, manual step and morphing time to obtain a complete pass through the complete chain.
- ❒ By different settings of the manual step control and the step CV attenuator one reaches any position within the chain (e.g. step 16) and varies the range of filters around this position (e.g. 14...16...18 10...16...22)
- ❒ Any control voltage sources of the A-100 can be used to control the 5 parameters of the A-107. There are no limits to the user's imagination.
- ❒ One may control step CV, morphing time, filter frequency, resonance and amplitude from the CV outputs of a sequencer (e.g. A-155 or MAQ16/3), add a little bit envelop (e.g. from the VC-Decay A-142) to control the filter frequency, control even the decay from a sequencer track and you will discover "filter sequences" you never heard before.
- ❒ The voltage controlled polarizer A-133 is a suitable tool to adjust envelopes dependent on the current filter type. A LP with a low basic frequency requires another envelope (normally positive) than a HP (e.g. a negative envelope). The A-133 is very useful to change the envelope polarity and level individually for each filter within a sequence.

7. Filter types

The **36 filter types** of the A-107 are shown on the next pages. For each filter the frequency response curve (X/frequency versus Y/amplitude) is shown and a short comment is added. For some filters customary names are available, e.g. xxdB lowpass/highpass, bandpass, notch or allpass. For the new filters without customary names we tried to find an explanation that describes the filter as good as possible.

The filters are divided into **two groups**. The filters of the first group (01...18) allow **self-oscillation**. The filters of the second group (19...36) do not include this feature.

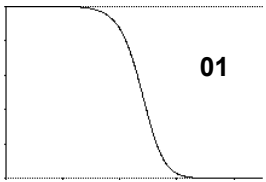

24 dB Lowpass

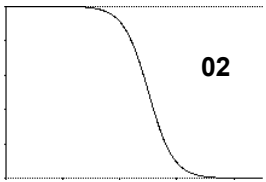

12 dB Lowpass

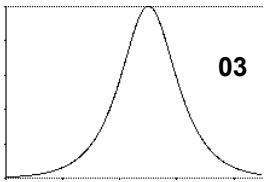

Bandpass
(6 dB LP + 6 dB HP)

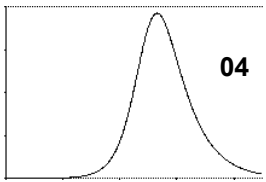

Asymmetric Bandpass 1
(12 dB LP + 6 dB HP)

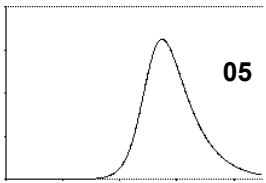

Asymmetric Bandpass 2
(18 dB LP + 6 dB HP)

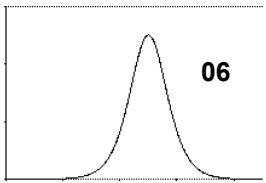

Bandpass
(12 dB LP + 12 dB HP)

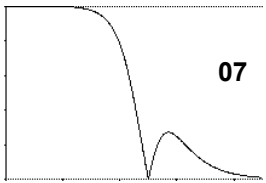

Notch + 6 dB Lowpass

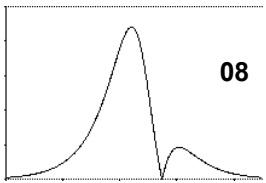

Allpass + 6 dB Lowpass

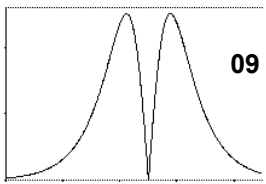

2 Bandpasses separated by a
notch ("fast food filter")

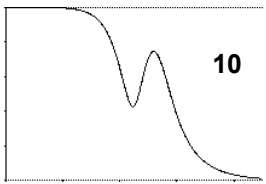

Lowpass + shifted Bandpass

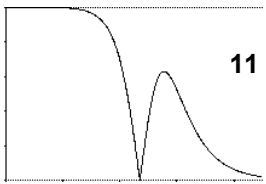

Lowpass + Notch I

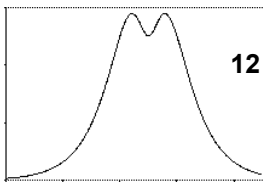

"Tooth"
2 shifted Bandpasses

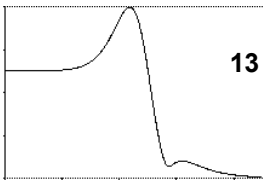

Lowpass + 2 shifted Bandpasses with different amplitudes

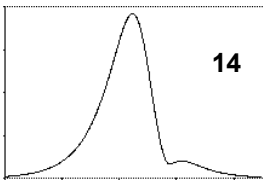

2 shifted Bandpasses with different amplitudes

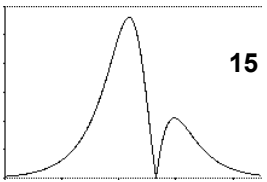

Lowpass + Notch + Highpass

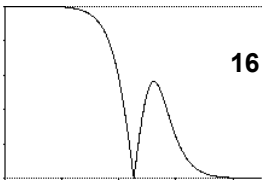

Lowpass + Notch II

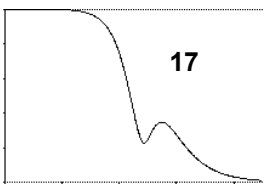

Lowpass + Soft Notch + Bandpass

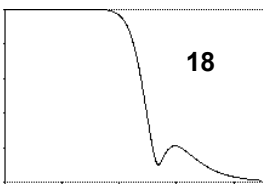

Lowpass with shifted Bandpass (smaller amplitude)

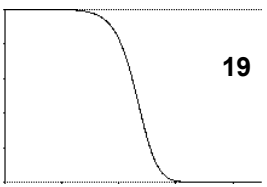

18 dB Lowpass

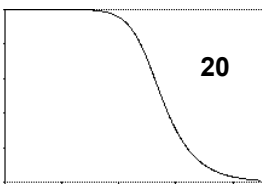

6 dB Lowpass

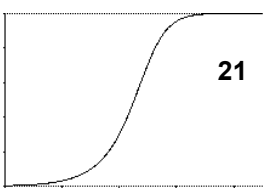

6 dB Highpass

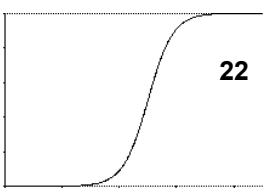

12 dB Highpass

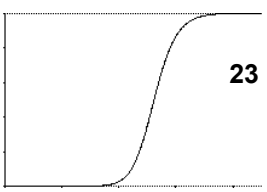

18 dB Highpass

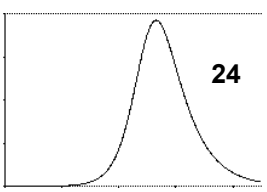

Asymmetric Bandpass 3 (12 dB LP + 6 dB HP)

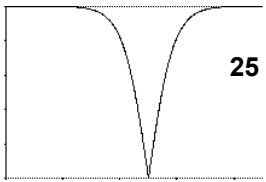

12 dB Notch

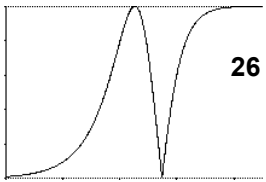

Allpass (lower frequencies attenuated)

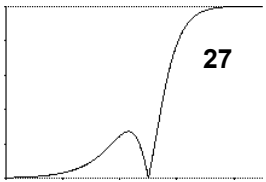

Notch + Highpass

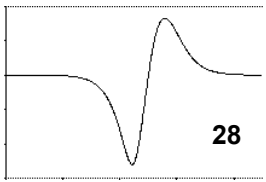

Soft Notch + shifted Bandpass

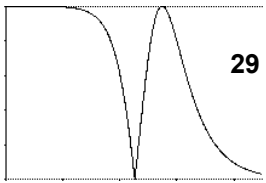

Allpass (higher frequencies attenuated)

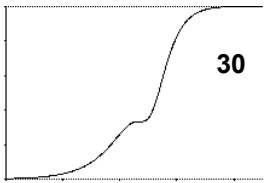

Highpass with "step"

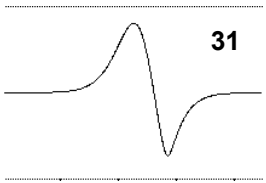

"Wave" filter

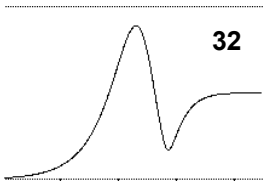

Lowpass + Soft Notch + Bandpass

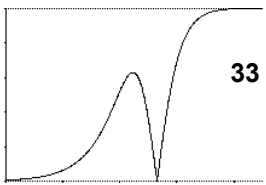

Notch + Highpass

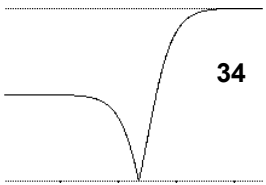

Lowpass + Notch + Highpass

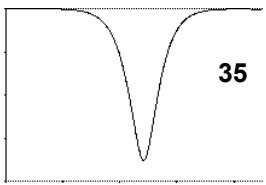

Soft Notch I

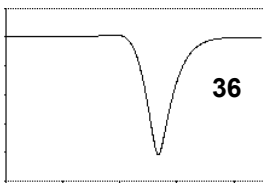

Soft Notch II

1. Introduction

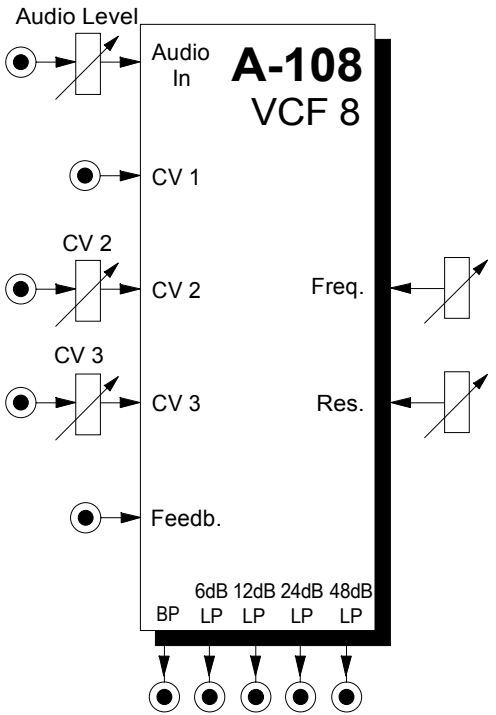

Module A-108 is a completely new, unique voltage-controlled **low pass/band pass filter** based on the well-known **transistor ladder** (Moog ladder).

The module has **internally** an **8 stage low pass filter** with different slopes available: 6, 12, 18, 24, 30, 36, 42 and 48 dB per octave. In the factory the outputs with **6, 12, 24 and 48 dB** are connected to the four low pass **sockets at the front panel**. In addition it features an **band pass** output (i.e. band pass with transistor ladder).

The module has **manual controls** for **frequency** and **resonance** available. Resonance can be adjusted right up to **self-oscillation**, in which case the filter will behave like a **sine wave oscillator**. **Three CV inputs for frequency control** are available. **Two** of them are eqipped with **attenuators**.

The A-108 features an **external feedback input** that enables the **insertion of additional modules** into the feedback path.

The **audio input** is **very sensitive** so that **distortion** is possible even with normal A-100 levels.

2. VCF 8 - Overview

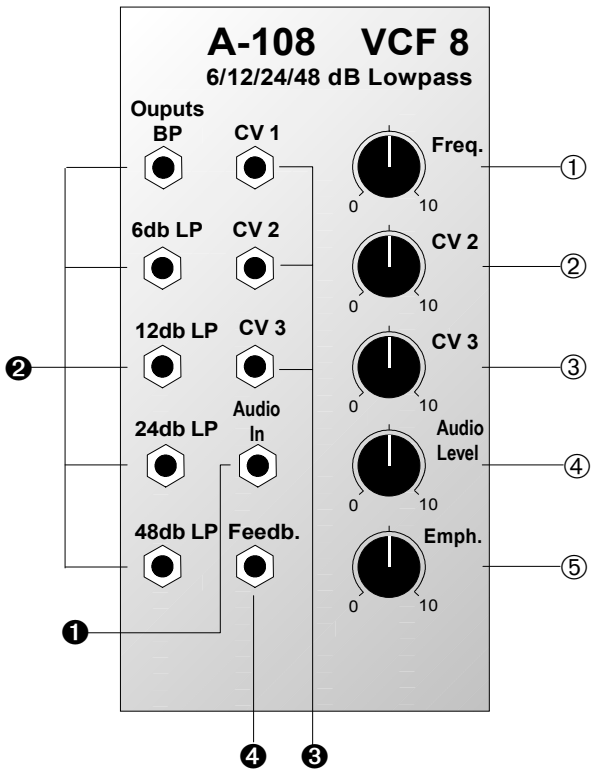

Controls:

①	**Freq.** :	Manual frequency control
②	**CV 2** :	Attenuator for frequency control voltage at input ❸ / CV2
③	**CV 3** :	Attenuator for frequency control voltage at input ❸ / CV3
④	**Audio Level** :	Attenuator for audio input ❶
⑤	**Emph.** :	Resonance control

In / Outputs:

❶	**Audio In** :	Audio input to the filter
❷	**BP**, **6 db LP** ... **48 db LP** :	Filter outputs
❸	**CV 1**:	Control voltage input for frequency control, approx. 1V/Oct.
❸	**CV 2**:	Control voltage input for frequency control, level controlled by ②
❸	**CV 3**:	Control voltage input for frequency control, level controlled by ③
❹	**Feedb.** :	external feedback input for resonance (audio input)

3. Controls

① Freq.

Control ① is used to adjust the **filter frequency** manually, i.e. the **middle frequency f_M** for the **band pass** resp. the **cut-off frequency f_C** for the **low pass** (see fig. 1).

☞ The actual filter frequency results from the sum of the manual control ① and the external control inputs CV1 ... CV3.

② CV 2 • ③ CV 3

For voltage control or modulation of the cut-off frequency the CV inputs ❸ can be used. The controls ② and ③ act as attenuators for the inputs CV2 and CV3 to adjust the **control voltage level**.

④ Audio Level

This attenuator is used to control the amount of signal entering the filter audio input ❶. If the filter's output distorts, turn this control down, unless you deliberately want the distorted sound as a special effect. The filter audio input is very sensitive so that distortion is possible even with normal A-100 levels. Distortion appears about from position 5 with normal A-100 audio levels.

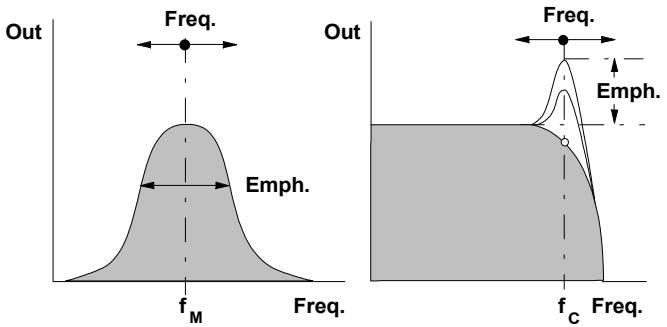

Fig. 1: Frequency response of band and low pass

⑤ Emph.

Control ③ is used to adjust the filter's **resonance** (or emphasis) - the parameter which emphasises the frequencies around the cut-off point f_C. For the band pass this control changes the bandwidth (see Fig.1-4).
Close to its maximum setting, the filter becomes so resonant that it goes into **self-oscillation**, and starts behaving like a **sine wave**. You can take advantage of this effect, and use the VCF as an additional sine oscillator. Self oscillation will break off at high distortion levels as the internal feedback signal is drown out by the distorted audio signal. This feature may intentionally be used to create new sounds. If you want to use the filter as a sine wave oscillator no audio signal should be fed in (or control ④ to zero).

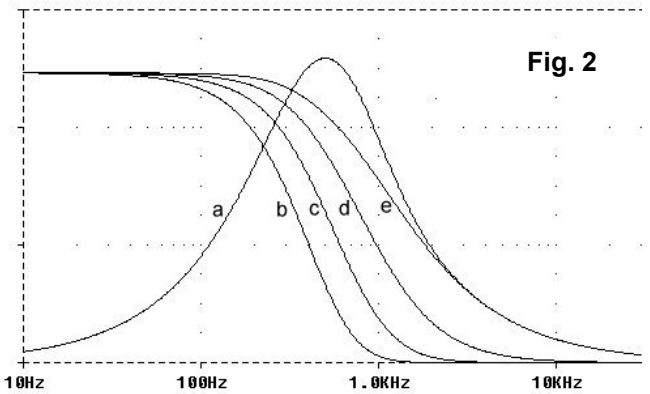

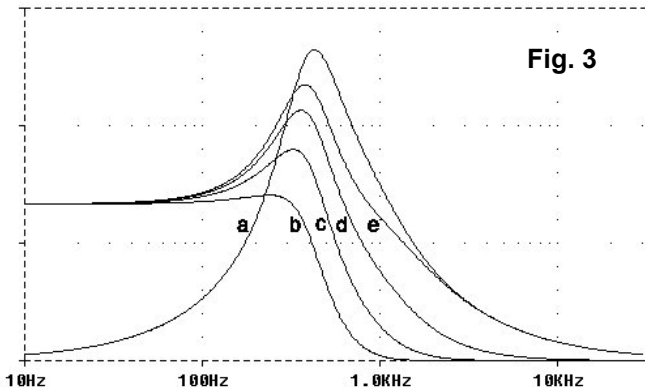

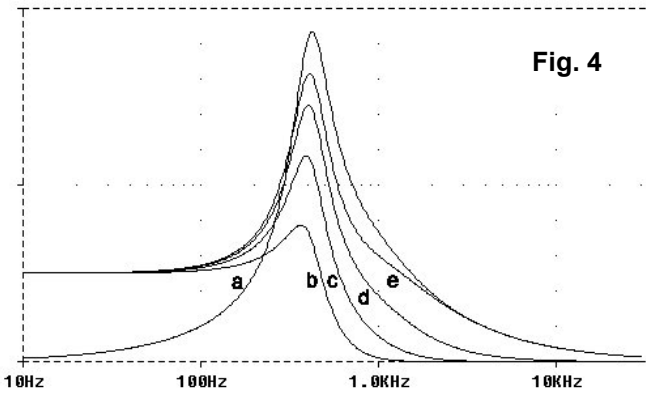

Fig. 2: Filter response curves (minimal resonance)

Fig. 3: Filter response curves (middle resonance)

Fig. 4: Filter response curves (high resonance)

For all figures:

a : Band pass
b : 48 dB Low pass
c : 24 dB Low pass
d : 12 dB Low pass
e : 6 dB Low pass

4. In / Outputs

❶ Audio In

This is the filter's **audio input** socket**.** Patch in the output from any sound source (eg. VCO, noise generator, subharmonic oscillator, sampler, mixer output).

❷ BP • 6db LP • ... • 48db LP

The sockets ❷ are the **filter outputs** with the filter types band pass (BP) as well as 6, 12, 24 and 48 dB low pass (LP).

☞ You may change the factory settings of the cut-off slopes (6, 12, 24, 48 db) for the four low pass outputs (see chapter 6 for details).

❸ CV 1 • CV 2 • CV 3

The sockets CV1, CV2 and CV3 are **control voltage inputs** to control the **filter frequency**. Input **CV1** has no attenuator and works approximately to the **1V/ octave standard** (not as exactly as the VCOs). Inputs CV2 and CV3 are equipped with the attenuators ② and ③ so that the sensitivity of these inputs can be adjusted. With attenuators set to 10 (fully clockwise) the sensitivity for CV2 and CV3 is about 0.5V/octave.

If you patch one or more modulation sources (e.g. LFO, ADSR, Random, S&H, Theremin, Ribbon, MIDI-to-CV) to these inputs, the cut-off frequency of the filter will be modulated by the sum of the control voltages: i.e., the sound color changes according to the sum of the control voltages put out by the modulators.



If you use the VCF as a sine wave oscillator, it is recommended to connect the pitch CV to socket CV1 as this input works approximately to the 1V/octave standard. Do the same if you want the filter's cut-off frequency to track exactly with the pitch of a note.

❹ Feedb.

Module A-108 has available an **external audio input for resonance**. This socket is normalled, i.e it is connected to the 48 dB low pass output unless another signal is patched into this socket. Different modules can be inserted into the feedback loop (see chapter 5 for examples). E.g. inserting a VCA enables voltage controlled resonance. It is also possible to feed back other filter outputs than the 48 dB low pass to obtain another resonance behaviour.

5. User Examples

The filter's cut-off frequency can be modulated in various ways: e.g. ADSR (A-140, A-141, A-142), LFO (A-145, A-146, A-147), Sample & Hold (A-148), Random (A-118), Joy-Stick (A-174), Theremin (A-178), Ribbon (A-198) or via MIDI (A-190/A-191). Many of these examples can be found in the manuals of the other filters of the A-100 system.

One special feature of the A-108 is the **external feedback input**. This enables the insertion of any audio processing module into the feedback path. Inserting a VCA leads to voltage controlled resonance. In this case the control voltage of the VCA works as voltage control input for the filter's resonance. Other modules that are suitable for insertion are e.g. phaser (A-125), frequency shifter (A-126), waveform processor/distortion (A-116, A-136) or even other filters.

Another example is a **filter with voltage controlled cut-off slope** in combination with the voltage controlled mixer A-135 and the morphing controller A-144. Fig. 5 shows the corresponding patch.

The four low pass outputs (6/12/24/48 dB) of the A-108 are connected to the four audio inputs of the voltage controlled mixer A-135.

The levels of the four mixer paths are controlled by the control voltages coming from the morphing controller A-144. The audio output signal of the filter with voltage controlled cut-off slope is available at the output of the voltage controlled mixer A-135.

The control voltage that is used to control the cut-off slope is connected to the control voltage input of the morphing controller A-144. That way it is possible to sweep the cut-off slope from 6 ... 48dB (fig. 5, ②) with the control voltage applied to the CV input of the A-144. In the example the voltage is generated by a joy stick (A-174) and called "character modulation". Of course any other control voltage (e.g. LFO, ADSR, MIDI-to-CV, Theremin, Random) could be used to control the "character", i.e. the cut-off slope. For more examples please refer to the A-144 user's manual.

The patch in fig. 5 has these control inputs available:

- **Char. Mod.** filter cut-off slope
- **Freq. Mod. 1** filter frequency 1 (e.g. ADSR)
- **Freq. Mod. 2** filter frequency 2 (e.g. LFO)

If the 48dB low pass output of the A-108 is connected to the feedback input of the A-108 through a VCA even the resonance is voltage controlled (= control voltage of the VCA).

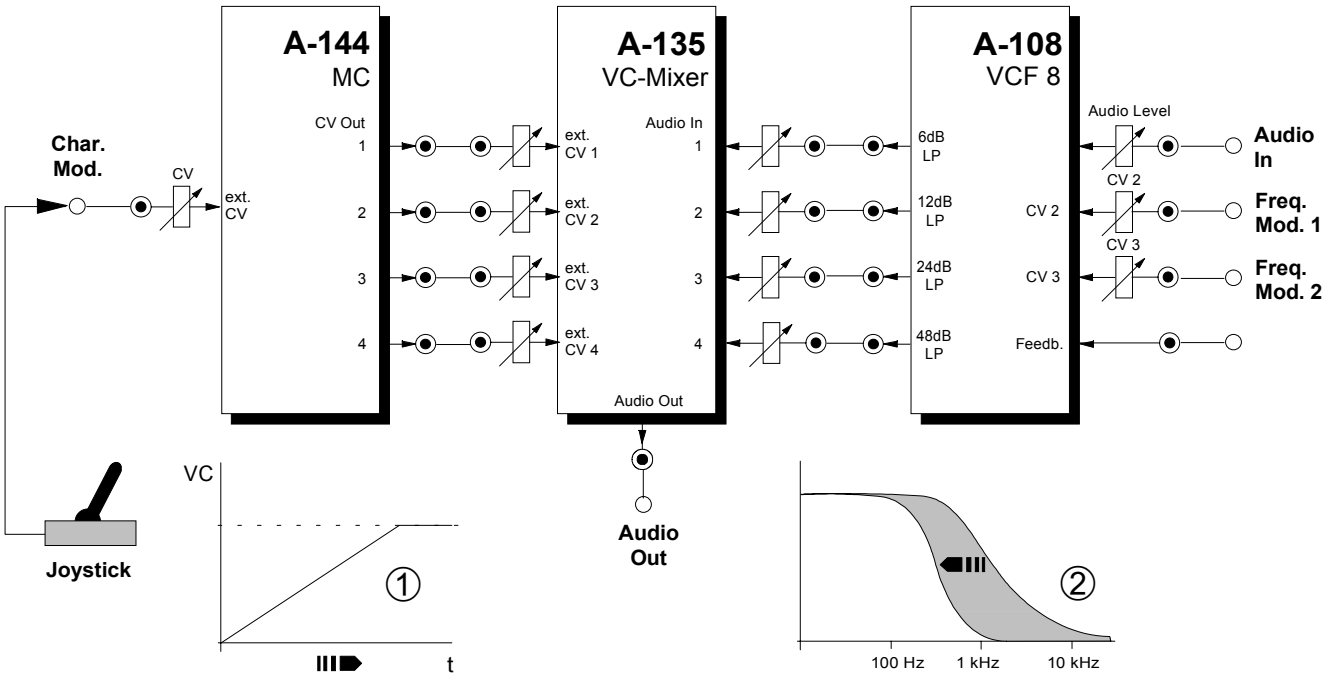

Fig. 5: Low pass filter with voltage controlled cut-off slope

6. Changing the assignment of the four low pass outputs

Only 4 output stages are available as this seems to be sufficient from our experience. In the factory the 4 outputs are connected to the filter stages with 6, 12, 24 and 48 dB cut-off slope. This is a well-considered compromise as these outputs generate audible different sounds. E.g. the audible difference between the 48dB and 42dB or between 42dB and 36dB is very little. So it would make not much sense to have 30, 36, 42 and 48 dB available instead of 6, 12, 24 and 48 dB.

But if desired any of the 8 filter stages can be connected to one of the 4 outputs. By changing the internal connections (jumpers or wires) each filter stage is available - but only four at a time. Even a multi-way switch could be used but from our results the factory setting (6/12/24/48dB) is the best combination for musical applications.

The factory settings can be changed if the corresponding jumpers on the pc board are removed and rearranged for the desired new output combination.

On the pc board 4 double row pin headers are available (see picture on next page). The positions of the jumpers on these pin headers determine the assignment of the filter stages to the outputs. One pair of jumpers is responsible for each of the filter stages. The factory setting of the jumpers is marked **black**.

These are the possible jumper settings (the factory settings are printed **bold**):

- Output 1: only **6 dB** possible
- Output 2: **12 dB** or 18 dB
- Output 3: **24 dB** or 30 dB or 36 dB
- Output 4: 42 dB or **48 dB**

In principle each filter stage can be connected to one of the four output stages but this would require additional wiring and cannot be carried out by changing the jumper settings only (e.g. 18 dB to output 3). All combinations not listed above have to be made with wires two by two instead of the jumpers. The upper row of the pin headers are the 8 filter stage outputs in pairs. The lower row of the pin headers lead to the inputs of the 4 output stages in pairs whereby the pins below 6 db belong to out 1, the pins below 12 and 18 to out 2, the pins below 24, 30 and 36 to out 3 and the pins below 42 and 48 to out 4. For details please refer to the A-100 service manual (additional charge).

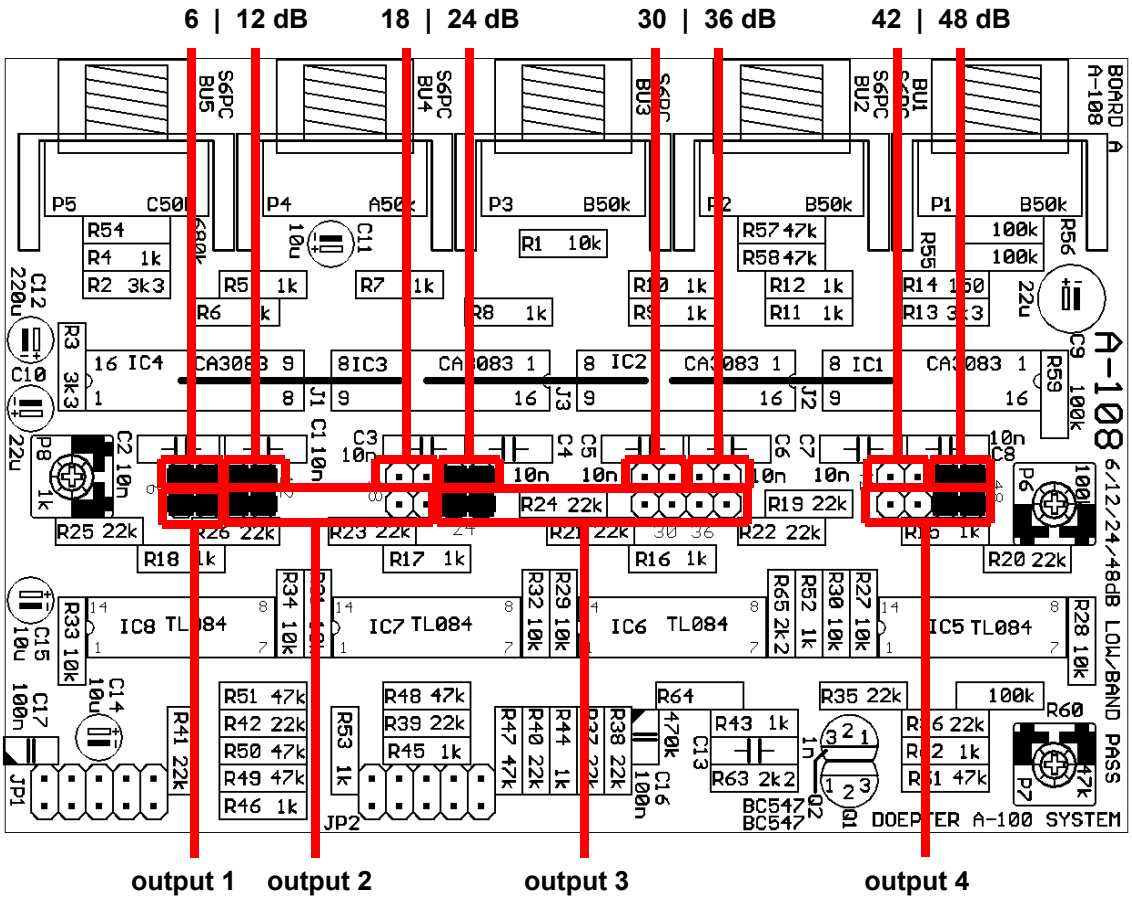
6 | 12 dB
18 | 24 dB
30 | 36 dB
42 | 48 dB
output 1
output 2
output 3
output 4
A-108
6/12/24/48dB LOW/BAND PASS
DOEPFER A-100 SYSTEM
BOARD A A-108

6. Patch-Sheet

The following diagrams of the module can help you recall your own **Patches**. They're designed so that a complete 19" rack of modules will fit onto an A4 sheet of paper.

Photocopy this page, and cut out the pictures of this and your other modules. You can then stick them onto another piece of paper, and create a diagram of your own system.

Make multiple copies of your composite diagram, and use them for remembering good patches and set-ups.

- Draw in patchleads with colored pens.
- Draw or write control settings in the little white circles.

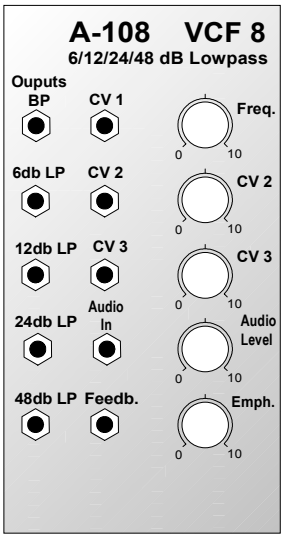

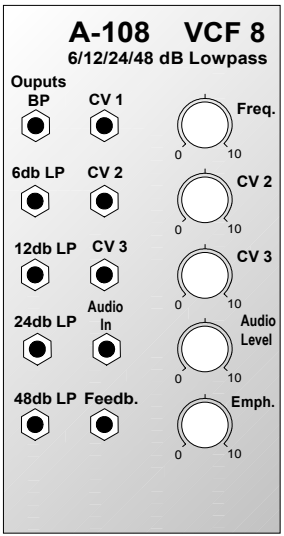

1. Introduction

Module **A-109** is a **voltage controlled audio signal processor** containing the components **VCF**, **VCA** and **PAN** (see fig. 1 on page 4).

The module is based on **Doug Curtis' CEM3379** that was used in many Sequential™, Ensoniq™ and PPG™ synthesizers.

The **audio in/outputs** of the module are **normalized**, e.g. the VCF output is fed into the VCA input privided that no jack plug is inserted to the VCA audio input socket.

The **VCF** is a **24 dB low pass** filter with **voltage controlled resonance**. The filter has a so-called "**constant amplitude versus resonance design**", i.e. the peak-to-peak output level remains within 6dB when the output waveform rings from added resonance.

Manual controls for **frequency** and **resonance** are available as well as **2 CV inputs for both** (one with attenuator). The frequency range is about 5 Hz ... 20kHz, resonance ranges from 0dB up to **self oscillation**.

The **main VCA** has a **combined exponential/linear control scale**: exponential from about 0...+200mV (corresponding to about -100dB ... -20dB attenuation), and linear from about 200mV...+5V (corresponding to about -20dB...0dB). The "rounded" knee at the scale bottom allows an envelope to decay to zero with a natural exponential sound. **Manual control** for **amplitude** is available as well as **2 CV inputs** (one with attenuator).

The **gains** of the **panning VCAs** are **complementary**, beeing equal and half of maximum at about +2.5V CV. The control scales are linear between about +1 and +3.5V CV, becoming logarithmic beyond these extremes. **Manual control** for panning is available as well as **2 CV inputs** (one with attenuator).

2. Overview

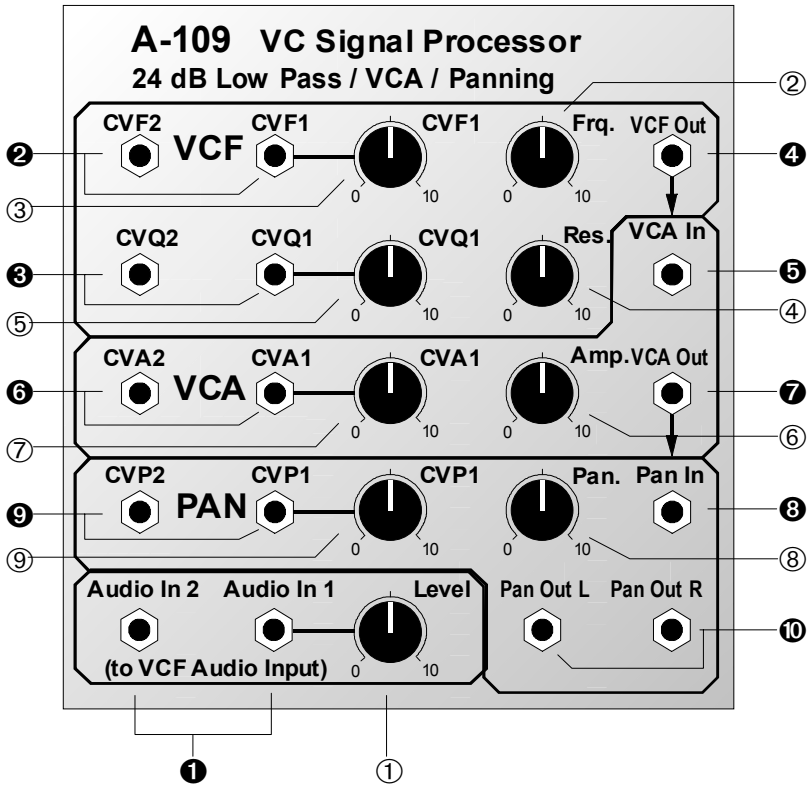
A-109 VC Signal Processor
24 dB Low Pass / VCA / Panning
CVF2
VCF
CVF1
CVF1
Frq.
VCF Out
CVQ2
CVQ1
CVQ1
Res.
VCA In
CVA2
VCA
CVA1
CVA1
Amp.
VCA Out
CVP2
PAN
CVP1
CVP1
Pan.
Pan In
Audio In 2
Audio In 1
Level
(to VCF Audio Input)
Pan Out L
Pan Out R
0
10

Controls:

① **Level** : Attenuator for input signal at socket ❶ (Audio In 1)

② **Frq.** : Manual control of filter frequency

③ **CVF1** : Attenuator for input signal at socket ❷ (CVF1)

④ **Res.** : Manual control of filter resonance

⑤ **CVQ1** : Attenuator for input signal at socket ❸ (CVQ1)

⑥ **Amp.** : Manual control of VCA amplitude

⑦ **CVA1** : Attenuator for input signal at socket ❻ (CVA1)

⑧ **Pan** : Manual panning control

⑨ **CVP1** : Attenuator for input signal at socket ❾ (CVP1)

In- / Outputs:

❶ **Audio In 1 • Audio In 2** : VCF audio inputs

❷ **CVF1 • CVF2** : CV inputs for filter frequency (CVF1 with attenuator)

❸ **CVQ1 • CVQ2** : CV inputs for filter resonance (CVQ1 with attenuator)

❹ **VCF Out** : Filter output

❺ **VCA In** : VCA audio input

❻ **CVA1 • CVA2** : CV inputs for VCA amplitude (CVA1 with attenuator)

❼ **VCA Out** : VCA output

❽ **Pan In** : Panning audio input

❾ **CVP1 • CVP2** : CV inputs for panning (CVP1 with attenuator)

❿ **Pan Out L • Pan Out R** : Audio outputs of the panning unit

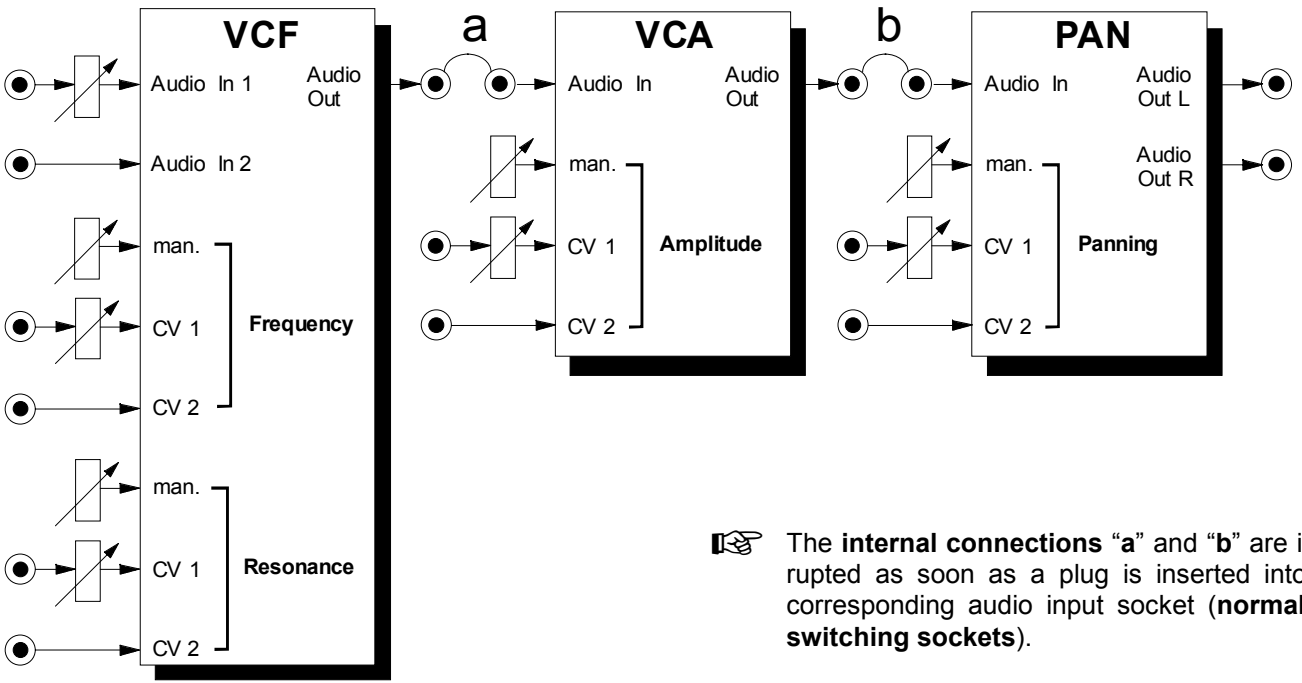

☞ The **internal connections** "**a**" and "**b**" are interrupted as soon as a plug is inserted into the corresponding audio input socket (**normalized switching sockets**).

Fig. 1: A-109 structure

3. Controls

① Level

Use this attenuator to control the amount of signal entering the filter input "Audio In 1".

☞ If the filter distorts, turn this control down, unless you deliberately want the distorted sound as a special effect. The audio input is very sensitive so that distortion is possible even with normal A-100 levels. Distortion appears about from position 5 with normal A-100 audio levels.

② Frq.

Control ② is used to adjust the **filter frequency** manually, i.e. the **cut-off frequency f_c** of the filter.

In the maximum position of this control the low pass filter is open. The more you turn down this control, the more the high frequencies are filtered. The sound becomes mellower and less bright (see Fig. 2) until at 0 the filter is completely shut, and there will be no output signal at all.

The actual filter frequency results from the sum of the manual control ② and the external control inputs CVF1 and CVF2.

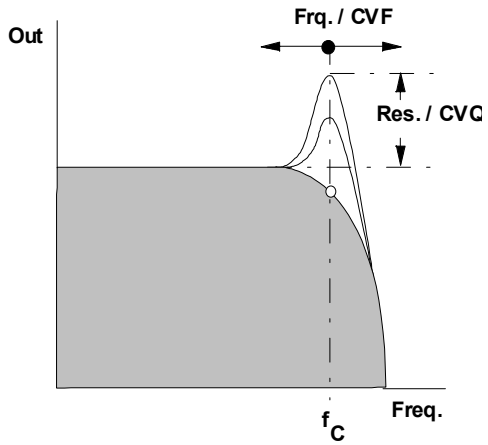

Fig. 2: Frequency response of the filter

③ CVF1

For voltage control or modulation of the **cut-off frequency**, use the frequency CV inputs ❷. Use attenuator ③ to adjust the **control voltage level** of the frequency CV input CVF1.

④ Res.

With this control you adjust the filter's **resonance** (or emphasis or Q factor) - the parameter which emphasises the frequencies around the cut-off point f_C (see Fig. 2). Close to its maximum setting, the filter becomes so resonant that it goes into **self-oscillation**, and starts behaving like a **sine wave oscillator**. You can take advantage of this effect, and use the VCF as an additional oscillator.

The actual resonance results from the sum of the manual control ④ and the external control inputs CVQ1 and CVQ2.

⑤ CVQ1

For voltage control or modulation of the **resonance**, use the resonance CV inputs ❸. Use attenuator ⑤ to adjust the **control voltage level** of the resonance CV input CVQ1.

⑥ Amp.

With this control you adjust the VCA's **amplitude** (or audio level). The **main VCA** has a **combined exponential/linear control scale**:

- **exponential** from about 0...+200mV (corresponding to about -100dB ... -20dB attenuation)
- **linear** from about 200mV...+5V (corresponding to -20dB...0dB attenuation)

The "rounded" knee at the scale bottom allows an envelope to decay to zero with a natural exponential sound.

⑦ CVA1

For voltage control or modulation of the **VCA amplitude**, use the amplitude CV inputs ❻. Use attenuator ⑦ to adjust the **control voltage level** of the amplitude CV input CVA1.

⑧ Pan

With this control you adjust the modules **panning setting** - the parameter that defines the amplitude relation between the audio outputs **Pan Out L** and **Pan Out R** (⑩), resp. the **position** of the audio signal in a **stereophonic** environment.

The middle position of this control corresponds to equal amplitude for both outputs, resp. middle stereo position.

The actual panning setting results from the sum of the manual control ⑧ and the external control inputs CVP1 and CVP2.

The **gains** of the **panning VCAs** are **complementary**, beeing equal and half of maximum at about +2.5V CV. The control scales are linear between about +1 and +3.5V CV, becoming logarithmic beyond these extremes.

⑨ CVP1

For voltage control or modulation of the **panning**, use the panning CV inputs ❾. Use attenuator ⑨ to adjust the **control voltage level** of the panning CV input CVP1.

4. In- / Outputs

❶ Audio In 1 • Audio In 2

These are the filter's **audio input** sockets. Both inputs form a miniature audio mixer. The signal at the "Audio In 1" socket is equipped with an attenuator to adjust the audio level of this input.

☞ As the input "Audio In 2" does not have available an attenuator high input levels may cause distortion at this audio input. To avoid this use "Audio In 1" that is equipped with an attenuator.

❷ CVF1 • CVF2

These are the **control voltage inputs** for the **filter frequency**. The control voltages of both sockets are added to manual control ②.

CVF1 is equipped with an **attenuator** that allows control the level of voltage - the intensity of modulation effect on the filter frequency - with the attenuator ③.

Socket **CVF2** does not have an attenuator and works approximately on the **1V / octave** rule, like the VCOs.

If you patch a modulation source (eg LFO, ADSR) to these inputs, the cut-off frequency of the filter will be modulated by the voltages, i.e. the sound color changes according to the voltages put out by the modulators.

If you use the VCF as a sine wave oscillator, connect the pitch CV into the CVF2 socket. Do the same if you want the filter's cut-off frequency to track with the pitch of a note.

❸ CVQ1 • CVQ2

These are the **control voltage inputs** for the **filter resonance**. The control voltages of both sockets are added to manual control ④.

CVQ1 is equipped with an **attenuator** that allows control the level of voltage - the intensity of resonace modulation on the filter - with the attenuator ⑤.

Socket **CVQ2** does not have an attenuator. The voltage range for this input is approximately 0...+5V (0V = no resonance, ~ +4...5V = self oscillation).

If you patch a modulation source (eg LFO, ADSR, sequencer, random CV) to these inputs, the resonance of the filter will be modulated by the voltages.

❹ VCF Out

Socket ❺ is the **audio output** of the **filter**. The socket is connected to the audio input of the VCA (see fig. 1).

❺ VCA In

This socket is the **audio input** of the **VCA**. It is internally connected to the VCF output ❹ (normalized socket) provided that no plug is inserted into the socket ❺.

❻ CVA1 • CVA2

These are the **control voltage inputs** for the **VCA amplitude**. The control voltages of both sockets are added to manual control ⑥.

CVA1 is equipped with an **attenuator** that allows control the level of voltage - the intensity of amplitude modulation on the VCA - with the attenuator ⑤.

Socket **CVA2** does not have an attenuator. The voltage range for this input is approximately 0...+5V.

❼ VCA Out

Socket ❼ is the **audio output** of the **VCA**. The socket is connected to the audio input of the panning section.

❽ Pan In

This socket is the **audio input** of the **Panning section**. It is internally connected to the VCA output ❼ (normalized socket) provided that no plug is inserted into the socket ❽.

❾ CVP1 • CVP2

These are the **control voltage inputs** for the **Panning section**. The control voltages of both sockets are added to manual control ⑧.

CVP1 is equipped with an **attenuator** that allows control the level of voltage - the intensity of panning modulation - with the attenuator ⑨.

Socket **CVP2** does not have an attenuator. The voltage range for this input is approximately 0...+5V.

A typical application is the periodical "walking" of a signal in the stereo panorama. For this the triangle or sine output of a LFO is connected to one of the sockets ❾ to control the panning.

❿ Pan Out L • Pan Out R

These sockets are the **left** resp. **right audio output** of the panning section.

5. User Examples

Module A-109 makes available three important basic modules: 24dB low pass (VCF), VCA and PAN. At least VCF and VCA are required for most of the standard synthesizer patches. The sub-modules are usefully pre-patched to minimize the required external patches.

Because of the normalized audio input sockets the sub-modules of the A-109 can be used even separately from each other.

As the A-109 is nothing but a collection of modules that are still available in the A-100 please look at the examples in the manuals for the A-100 filters (e.g. A-102, A-103, A-105, A-108, A-120, A-122), VCAs (e.g. A-130, A-131, A-132) and the separate panning module (A-134) to find some typical applications.

6. Patch-Sheet

The following diagram of the modules can help you recall your own **Patches**. They're designed so that a complete 19" rack of modules will fit onto an A4 sheet of paper.

Photocopy this page, and cut out the pictures of this and your other modules. You can then stick them onto another piece of paper, and create a diagram of your own system.

Make multiple copies of your composite diagram, and use them for remembering good patches and set-ups.



- Draw in patchleads with colored pens.
- Draw or write control settings in the little white circles.

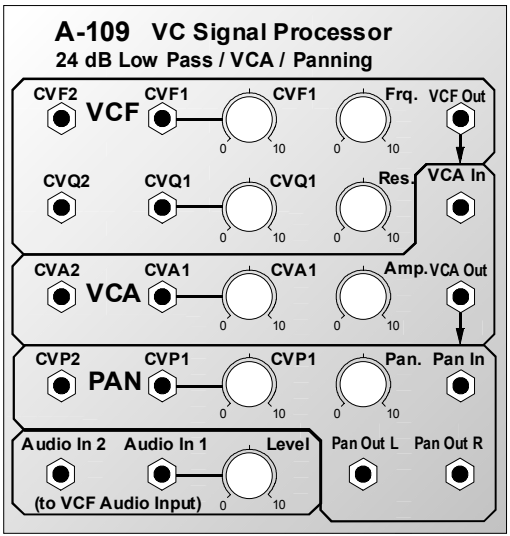

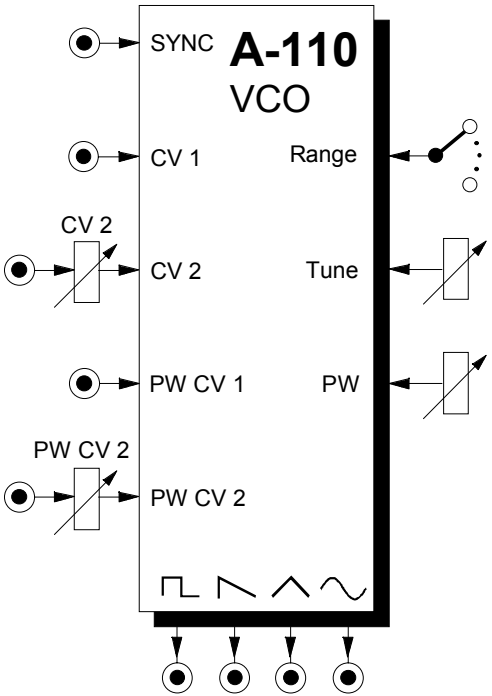

1. Introduction

Module **A-110 (VCO)** is a **voltage-controlled oscillator**.

This VCO's frequency range is about ten octaves. It can produce four **waveforms** simultaneously: **square, sawtooth, triangle,** and **sine wave.**

The **Frequency** or **pitch** of the VCO is determined by the position of the octave (Range) switch and tuning (Tune) knob, and by the voltage present at the CV inputs. **Frequency modulation (FM)** of the VCO is therefore a possibility. **Footage** (the octave of the fundamental) is set by the Range control, and **Fine tuning** controlled by the Tune knob.

You can control the **pulse width** of the square wave either by hand, or by voltage control - **Pulse Width Modulation** or **PWM.**

☞ Because of the analog nature of the design, the VCO may need about 20 minutes' warm-up time for the tuning to become completely stable.

2. VCO Overview

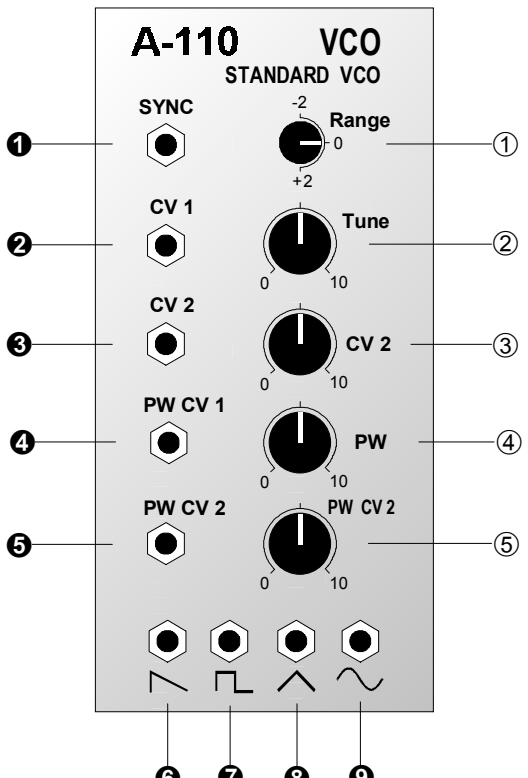

Controls:

①	**Range**:	5-position Octave or Footage switch
②	**Tune**:	Fine tuning control
③	**CV 2**:	Attenuator for voltage at CV 2 (❸)
④	**PW**:	Manual control for Pulse Width
⑤	**PW CV 2**:	Attenuator for PWM voltage at PW CV 2 (❺)

In / outputs:

❶	**SYNC**:	Sync input
❷	**CV 1**:	Voltage control input 1
❸	**CV 2**:	Voltage control input 2, level adjustable with ③
❹	**PW CV 1**:	PWM input 1
❺	**PW CV 2**:	PWM input 2, level adjustable with ⑤
❻	:	Sawtooth output
❼	:	Square wave output
❽	:	Triangle wave output
❾	:	Sine wave output

3. Basics

Module A-110 puts out four waveforms simultaneously. All these signals have the same pitch, since all are controlled by the same voltages present at inputs ❷ and ❸.

Sawtooth

The VCO's sawtooth waveform is present at output ❻. It has a 'cutting' sound, rich in overtones. All the harmonics of the fundamental are present, with a linear reduction in intensity as the harmonic series progresses - so that the second harmonic is half as strong, the third is one third, the fourth a quarter, and so on (see Fig. 1).

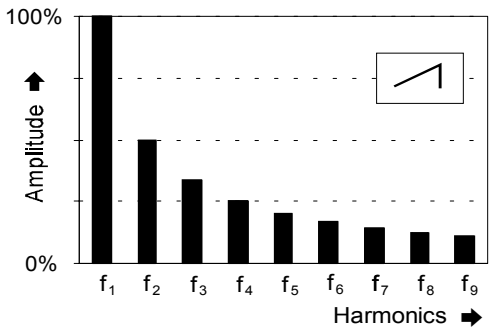

Fig. 1: Harmonic spectrum of a sawtooth

Sawtooth waves are ideal for synthesizing sounds which are rich in harmonics, such as percussion, brass or vocal timbres.

Square wave

The VCO produces a square / rectangle wave at output ❼. You can alter its pulse width manually, or by voltage control (Pulse Width Modulation).

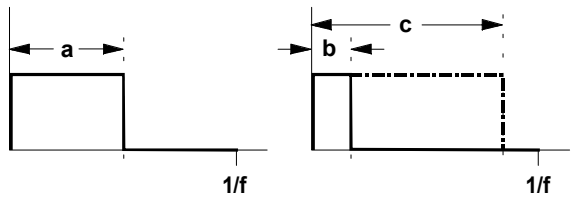

Fig 2: Square waves with different pulse widths

A **symmetrical Pulse wave** (i.e. an exact square wave, with a pulse width of 50 %), has only odd harmonics of its fundamental (see Fig. 3) and produces a typically hollow sound.

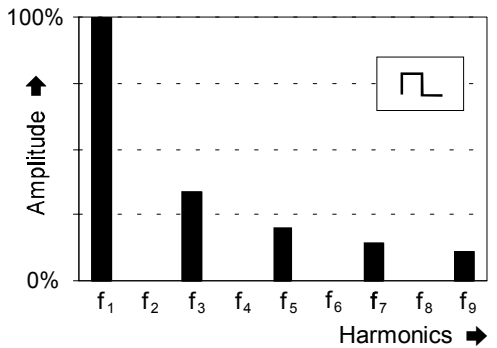

Fig. 3: Harmonic spectrum of a true square wave

The further the pulse width deviates from 50% (see Fig. 2, b and c), the weaker the lower harmonics become, and the more the sound gets thin and nasal.

Square waves are often used as a sound source in subtractive (filtered) synthesis, because of their rich overtones, and are good at producing woodwind-like timbres.

Triangle wave

A triangle wave (VCO Output ❸) is poor in upper harmonics, and sounds softer and more mellow. It only contains odd harmonics, whose strength decreases exponentially - the third harmonic is a ninth as strong, the fifth 1/25, and so on.

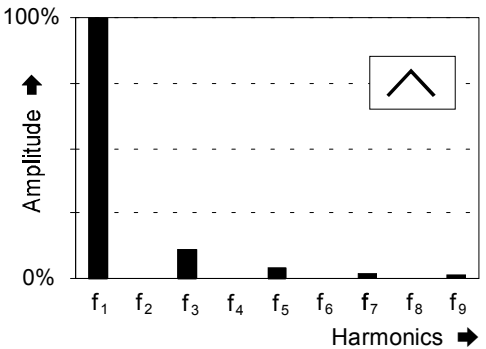

Fig. 4: Harmonic spectrum of a triangle wave

Because of their soft, rounded timbre, triangle waves are ideal for synthesizing timbres like flute, organ and vibes.

Sine Wave

Sine waves are pure waves: they just contain the fundamental, without any harmonics (see Fig. 5). They are thus not suitable for subtractive synthesis (shaping sound with a filter).

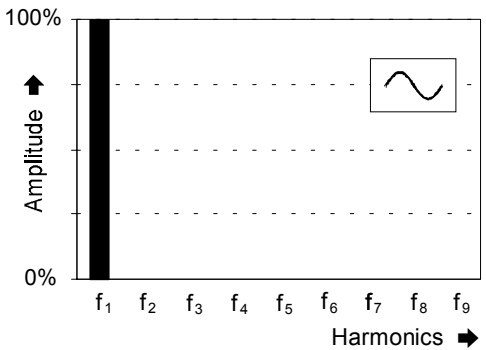

Fig. 5: Spectrum of a sine wave

Frequency Modulation (FM)

Because the frequency of the VCO is controlled by the voltages at inputs ❷ and ❸, Frequency Modulation is possible: frequency (pitch) is continuously varied by the voltages at the CV input/s.

For instance, if the frequency of the VCO is controlled by a slow LFO, you get typical vibrato (see Fig. 6).

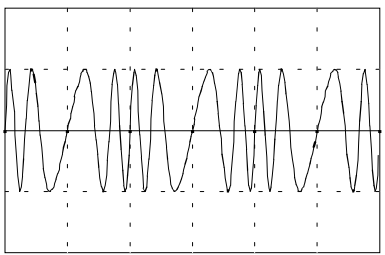

Fig. 6: Frequency modulation using a slow LFO (Vibrato)

If the modulation frequency is in the audio range, completely different sounds emerge (see User Examples 6).

4. Controls

① Range

Footage (the octave of the fundamental) is controlled with this knob. Five settings are available, giving a wide frequency range.

② Tune

The TUNE control enables **Fine Tuning** of the oscillator frequency in a range of roughly ± ½ Octave. For precise tuning, an electronic tuner is recommended.

If two or more oscillators are controlled by the same control voltages, and set to the same footage, you can use the TUNE knob to de-tune one or more of the oscillators relative to each other.

This can produce vibrato and chorus-like effects, perfect for soundscapes and generally rich timbres.

③ CV 2

The pitch of the VCO is controlled by the voltages present at inputs ❷ and ❸. The amount the control voltage at input ❸ affects VCO pitch can be controlled with **Attenuator** ③ (see also ❸).

④ PW

You use control ④ to alter the pulse width of the square wave appearing at output ❻ (see Fig. 2 and ❻).

⑤ PW CV 2

The pulse width of the square wave can also be altered or modulated by voltage control from inputs ❹ and/or ❺. The level of the **PW CV 2** (input ❺) affecting the pulse width can be set with gain control ⑤ (see also ❺).

5. In / Outputs

❶ SYNC

Socket ❶ is the **Sync Input** for the VCO. What sync means in this context is that the waveform of one VCO ("Slave") is locked to the waveform of another VCO ("Master"), by connecting the audio out of the master VCO to the Sync input of the slave VCO.

In the A-110, this is designed as "**Hard Sync**". Check out the following example (see Fig. 7): the slave VCO's sawtooth waveform is always reset to the beginning of a cycle whenever the master VCO's sawtooth waveform starts a new cycle. If f_M - the frequency of the master VCO - is higher than f_S (the slave's frequency), then the slave's pitch is synced exactly to the master's (Fig. 7a).

In the opposite situation, where the master VCO's pitch is lower than the slave ($f_M < f_S$), the master again imposes its frequency on the slave (Fig. 7 b: cycle T exactly matches the master VCO's cycle). But at the same time, harmonic sidebands are produced by the slave VCO's changed waveform, which can create interesting timbral effects.

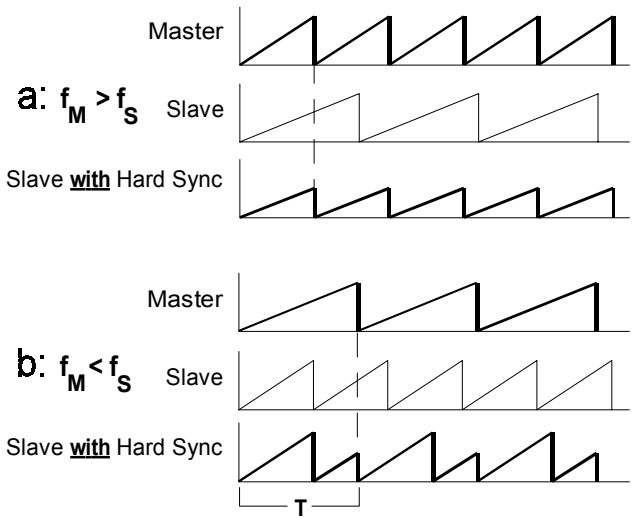

Fig. 7: Hard Sync on the A-110

❷ CV 1 • ❸ CV 2

Sockets ❷ and ❸ are **CV inputs** for controlling the VCO's frequency (pitch). The voltages at these inputs are summed. The inputs follow the 1V / octave rule exactly.

Input ❷ is normally connected to a control voltage governing pitch (for instance from a MIDI-CV interface, or a master keyboard with a 1V / octave output).

☞ Socket **CV 1** ❷ is designed as a normalled socket, connected to whatever CV is present on the internal **System Bus**. This CV (for instance from a master keyboard) governs the VCO's pitch, unless a plug is inserted in socket ❷ .

If you put a control voltage (for instance from an LFO) into socket ❷ , the System Bus is disconnected, and the VCO's pitch is controlled by this voltage.

As a rule, input ❸ is used for FM - for vibrato, autobend, or other pitch-related effects; the level of control voltage passing to the VCO is adjusted with attenuator ③ .

❹ PW CV 1 • ❺ PW CV 2

Sockets ❹ and ❺ are the **Voltage Control Inputs** for the **Pulse Width** of the square wave that the VCO produces. These voltages are summed. The level of CV input ❺ can be controlled with knob ⑤.

❻ ❼ ❽ ❾

These four sockets are the VCO outputs: **Square wave** (❻)**, Sawtooth** (❼), **Triangle** (❽) and **Sine wave** (❾).

Pitch is always the same for each of these outputs.

6. User examples

FM in the audio range

Using **audio range** oscillators for FM can produce interesting sounds. Thanks to the rapid changes in the modulated VCO's pitch, side bands are created: as well as the two original frequencies, you also get the frequencies created by their sum and difference (for instance, a modulation frequency of 100 Hz and a carrier frequency of 500 Hz produce side bands at 400 Hz and 600 Hz).

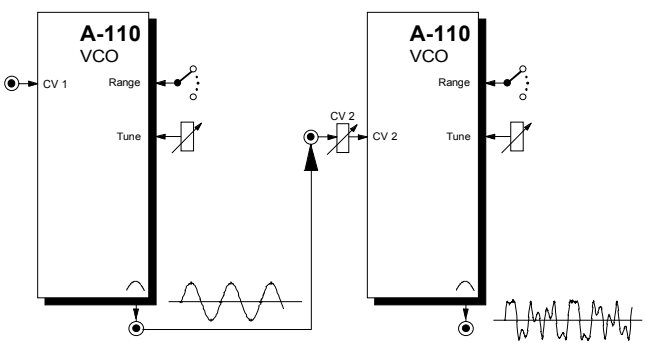

Fig. 8: Frequency modulation in the audio range

When you try this out (see Fig. 8), start off with sine waves, and slowly raise the modulation frequency from the sub-audio into the audio range.

If you use waveforms other than sine waves in FM in the audio range, the sounds that result will be extremely complex and difficult to predict. A sawtooth, for instance, can be looked upon as a vast number of sine waves of different frequencies - all of which will be represented in the modulated output, so that the final sound will be a complex mix of the buzzes, noises and tones produced by all the various sum and difference outputs.

☞ The FM in the A-110 is **exponential** (as opposed to linear) **FM.** This means that changes in control voltage produce proportional changes in the pitch relationship of the component sounds.

With FM in the audio range, this can lead to undesirable side-effects. If, for instance, a 440 Hz sine wave is modulated by another with twice the amplitude, the maximum frequency of the modulated signal will be 880 Hz, and the minimum will be 220 Hz (see Fig.9).

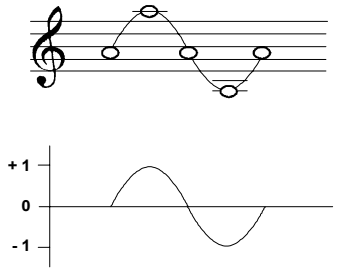

Fig. 9: exponential FM using the A-110

With FM in the audio range, the ear doesn't resolve these octave transitions, but hears the whole sound as a very full and rather weird composite, with the middle frequency clearly at odds with the carrier frequency.

Whenever you change pitch using exponential FM, the inevitable side effect of the change will be an unplanned and un-musical change in the relative pitch of the components of the sound!

In circumstances where this pitch-shift is not wanted, you need to use an **A-111 High-End VCO** instead of the A-110, because it has the benefit of **linear FM**, and can thus avoid this problem.

Tone colour changes using VCO SYNC

Very interesting sounds can be created by syncing together two VCOs (see p.7), using sub-audio frequency modulation (eg. with an LFO) on the slave VCO, and a mixer to add to the excitement by subtly varying the level of each VCO (see Fig. 10).

Try different settings for the slave and master VCO, as well as varying the FM amount. You'll be amazed at the complexity and amount of variation over time of the overtones created.

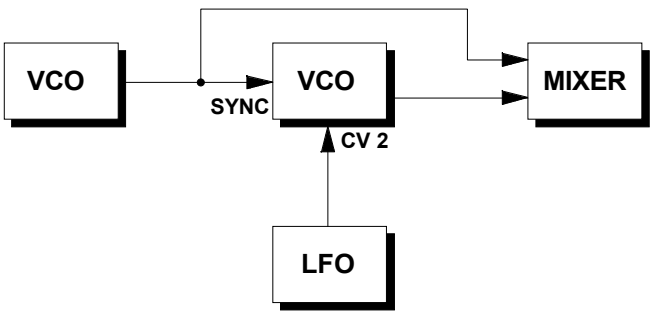

Fig. 10: Tone colour changes using VCO SYNC

Pulse Width Modulation

If you modulate the pulse width of a square wave with an LFO or ADSR (**Pulse Width Modulation**, or **PWM**), the harmonic spectrum constantly changes (see p.3, 4). Even with just one oscillator, you can create a dense timbre with internal movement, in some ways similar to vibrato, and otherwise only available by using two oscillators fractionally de-tuned from each other.

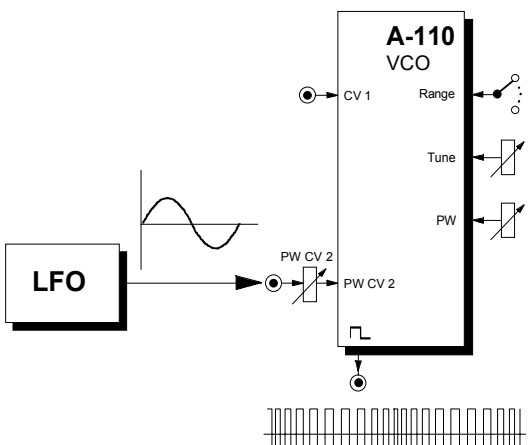

Fig. 11: Pulse Width Modulation using an LFO

VCO and DIVIDER

Using a divider like the A-115, you can synthesize up to three square-wave sub-octaves, and mix them with the original signal at any level you choose.

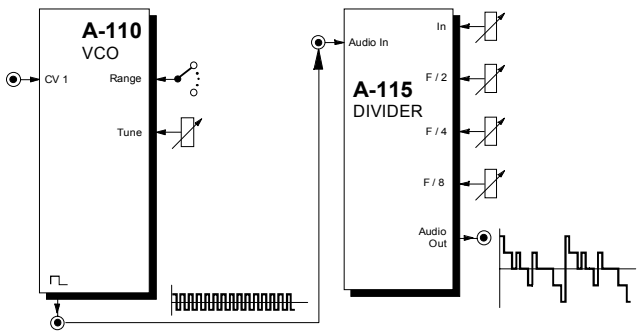

Fig. 12: Using the DIVIDER to add sub-octaves

VCO and WAVEFORM PROCESSOR

With a WAVEFORM PROCESSOR you can alter the symmetry of the VCO's waveform and positively distort it, to construct new waveforms.

7. Patch-Sheet

The following diagrams of the module can help you recall your own **Patches**. They're designed so that a complete 19" rack of modules will fit onto an A4 sheet of paper.

Photocopy this page, and cut out the pictures of this and your other modules. You can then stick them onto another piece of paper, and create a diagram of your own system.

Make multiple copies of your composite diagram, and use them for remembering good patches and set-ups.

- Draw in patchleads with colored pens.
- Draw or write control settings in the little white circles.

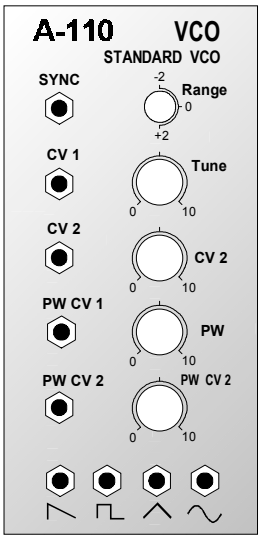

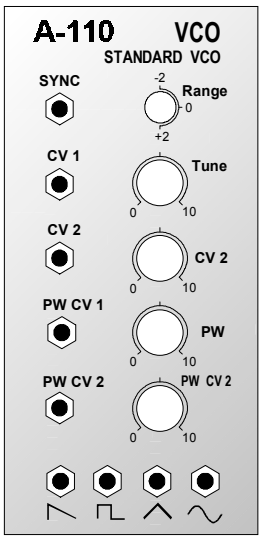

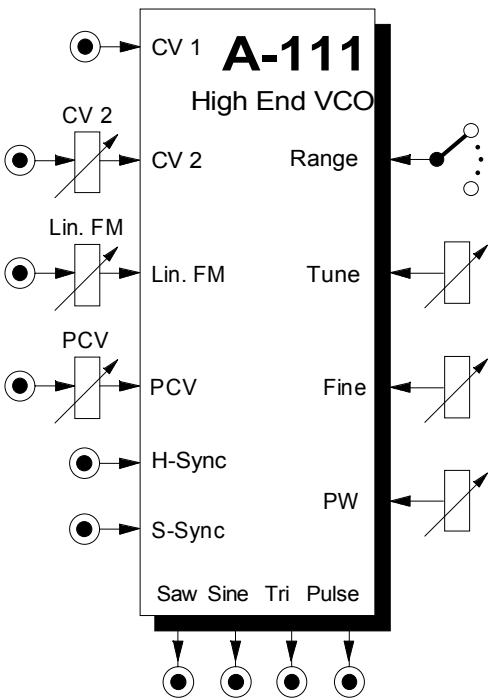

1. Introduction

Module **A-111 (VCO 2)** is a **voltage controlled oscillator**.

The VCO has a range of about 12 octaves, and produces four **waveforms** simultaneously: **pulse** (**rectangle), sawtooth, triangle and sine waves.**

The VCO's frequency is determined by the position of the range switch, tune and fine tune controls, and the voltage at the two pitch CV inputs, CV 1 and CV 2.

Footage (the octave of the fundamental) is set by the Range control, which has seven octave steps. The Tune control is used for **coarse tuning**, and the Fine control for **fine tuning** of the VCO pitch.

The A-111 can be modulated by both **exponential** and **linear FM (frequency modulation).**

You can control the **pulse width** of the square wave either by hand, or by voltage control - **Pulse Width Modulation**, or **PWM** for short.

The A-111 has inputs for **Hard Sync** and **Soft Sync**.

2. VCO 2 - Overview

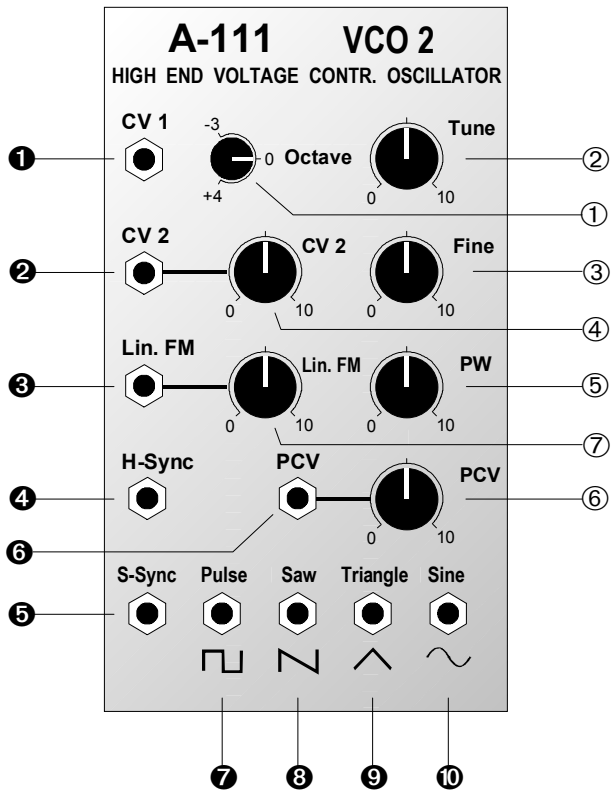

Controls:

①	**Range** :	7-position switch for octave selection
②	**Tune** :	Control for coarse tuning
③	**Fine** :	Control for fine tuning
④	**CV 2** :	Attenuator for pitch CV at input ❷
⑤	**PW** :	Manual control for pulse width
⑥	**PCV** :	Attenuator for PWM voltage at PCV ❻
⑦	**Lin. FM** :	Attenuator for voltage at linear FM input ❸

In- / Outputs:

❶	**CV 1** :	Pitch control input (1 V/oct.)
❷	**CV 2** :	ditto, level adjustable with ④
❸	**Lin. FM** :	CV input for linear FM
❹	**H-Sync** :	Input for hard synchronisation
❺	**S-Sync** :	Input for soft synchronisation
❻	**PCV** :	Input for pulse width modulation CV
❼, ❽, ❾, ❿ :		VCO outputs

3. Basics

3.1 Waveforms

Module A-111 puts out four waveforms simultaneously. All these signals have the same pitch, since all are controlled by the same CVs at inputs ❶ and ❷ .

Sawtooth

The VCO's sawtooth waveform is available at output ❼. It has a 'cutting' sound, rich in overtones. All the harmonics of the fundamental are present, with a linear reduction in intensity as the harmonic series progresses - so that the second harmonic is half as strong, the third is one third, the fourth a quarter, etc. (see Fig. 1).

Sawtooth waves are ideal for synthesizing sounds which are rich in harmonics, such as percussion, brass or vocal timbres, and as the carrier input to a vocoder.

Pulse wave

The VCO produces a square / rectangle wave at output ❿. You can alter its **pulse width** (see Fig. 2) by hand or by voltage control (**pulse width modulation** or **PWM** for short**)**.

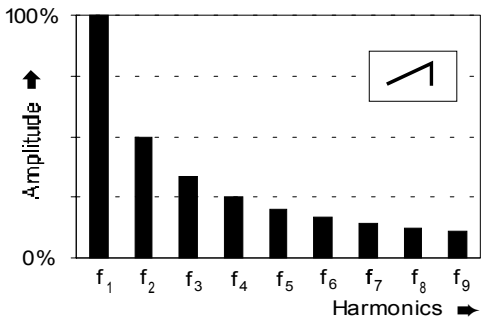

Fig. 1: Harmonic spectrum of a sawtooth

A **symmetrical pulse wave** (ie. an exact square wave, with a pulse width of 50%) has only odd harmonics of its fundamental (see Fig. 3) and produces a typically hollow sound.

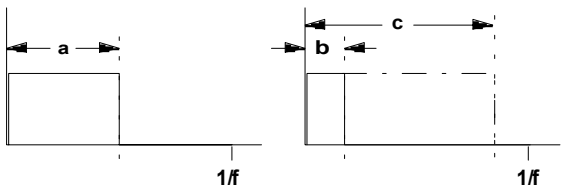

Fig. 2: Rectangle waves with different pulse widths

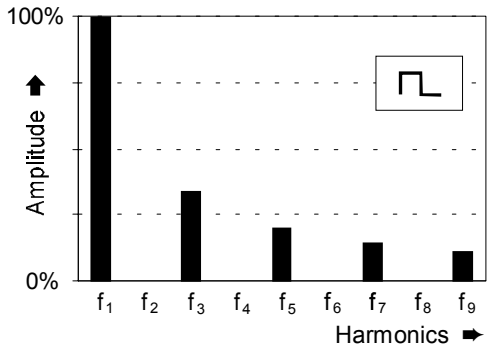

Fig. 3: Harmonic spectrum of a true square wave

The further the pulse width deviates from 50% (see Fig. 2, b and c), the weaker the lower harmonics become, and the more the sound gets thin and nasal.

Pulse waves are often used as a sound source in subtractive (filtered) synthesis, because of their rich overtones, and are good at producing woodwind-like timbres.

Triangle wave

A triangle wave (output ❾) is poor in upper harmonics, and sounds softer and more mellow. It only contains odd harmonics, whose strength decreases exponentially - the third harmonic is a ninth as strong, the fifth 1/25, and so on.

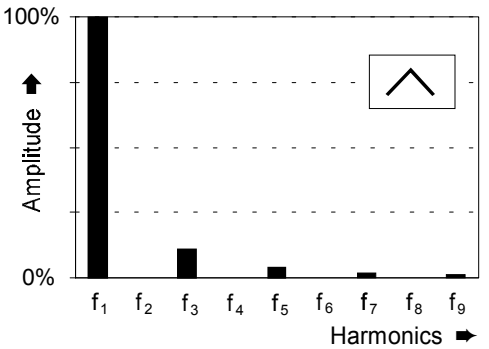

Fig. 4: Harmonic spectrum of a triangle wave

Because of their soft, rounded timbre, triangle waves are ideal for synthesizing timbres like flute, organ and vibes. Because of the comparative weakness of the upper harmonics, they are not ideal for treating with a low pass filter, in subtractive synthesis.

Sine wave

Sine waves are pure waves: they just contain the fundamental, without any harmonics (see Fig. 5). They are thus not suitable for subtractive synthesis (shaping sound with a filter) - as there's nothing to take away!

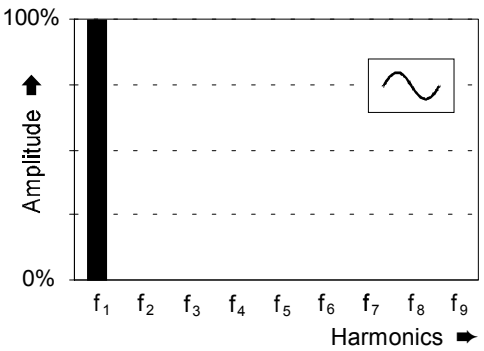

Fig. 5: Spectrum of a sine wave

3.2 Frequency Modulation (FM)

Since the frequency of the VCOs can be voltage controlled, that of course makes **frequency modulation** (FM) possible. The frequency changes continuously, depending on the incoming voltages at CV1 and CV2. In contrast with the standard VCO module (A-110), the A-111 provides two types of frequency modulation.

For **exponential FM** (like on the A-110) you simply input a modulation signal via the normal CV inputs, ❶ or ❷. For **linear FM** there is a dedicated CV input ❸, complete with attenuator.

If the modulation signal is in the **sub-audio range** (for instance modulation with a slow LFO), there'll be no real difference noticeable between the two types. The result in both cases is a typical vibrato (see Fig. 6).

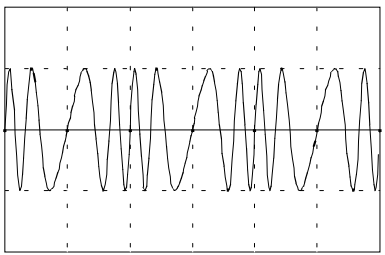

Fig. 6: Frequency modulation with a slow LFO (vibrato)

Completely different sounds will emerge, though, if the modulation frequency is in the **audio range**.

Exponential FM in the audio range

For exponential FM, patch the modulation voltages into **CV input ❶** or **❷** (see Fig. 7).

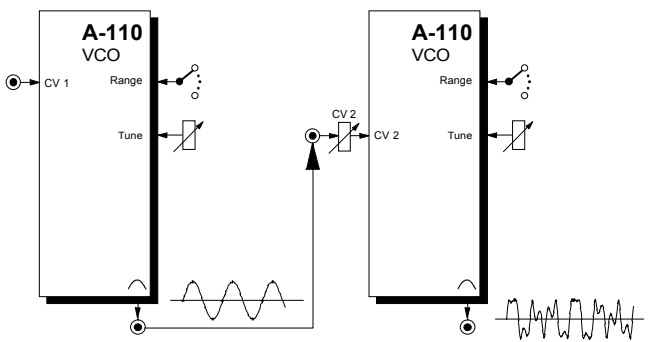

Fig. 7: Frequency modulation in the audio range

Thanks to the rapid changes in the modulated VCO's pitch, **side bands** are created: as well as the two original frequencies, you also get the frequencies created by their **sum and difference** (for instance a modulation frequency of 100 Hz and a carrier frequency of 500 Hz produce side bands at 400 Hz and 600 Hz).

When you try this out for the first time, start off with sine waves, and slowly raise the modulation frequency from the sub-audio into the audio range.

If you use waveforms other than sine waves in FM in the audio range, the sounds that result will be extremely complex and difficult to predict. A sawtooth, for instance, is like a vast number of sine waves of different frequencies - all of which will be represented in the modulated output, so that the final sound will be a complex mix of the buzzes, noises and tones produced by all the various sum and difference outputs.

With **exponential FM,** changes in control voltage produce **proportional changes in the pitch relationship** of the component sounds**.** This can have unwanted side-effects. If a 440 Hz VCO sine wave is modulated by a 2 V_{SS} amplitude sine wave (see Fig. 8), the top and bottom side-bands are respectively up and down one octave, at 880 Hz and 220 Hz. You might think that would be fine - but with modulation in the audio range, we hear the note half-way between these frequencies - 550Hz - and this is (not surprisingly) out of tune with the original 440 Hz carrier note.

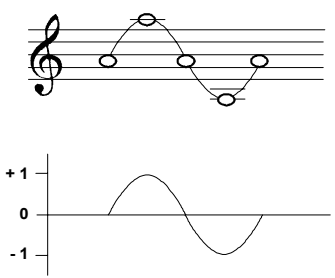

Fig. 8: Exponential FM in the audio range

Whenever you change pitch using exponential FM, the inevitable side effect of the change will be an unplanned and usually un-musical change in the relative pitch of the components of the sound.

If the side-effects of exponential FM aren't wanted, then you need to use the linear FM input on the A-111.

Linear FM in the audio range

Linear FM is now one of the standard building blocks of synthesis. Especially after the introduction and instant success of the Yamaha DX 7, in the early 80s, linear FM was hugely popular throughout the world, and is partly what people are referring to when they talk about 'digital' sounds. After being superceded in popularity by 'sample & synthesis' technology in the late 80s - and analog or analog-like instruments in the 90s - it is now appreciated again as a very useful source of timbres.

With linear FM, changes in control voltage produce **proportional changes in pitch, not in octaves**. It's a Hz/V rather than V/octave response.

This time, if you modulate a 440 Hz sine wave with a 220 Hz sine wave, the side-bands created will be at 220Hz and 660 Hz, and so the pitch at which we hear the modulated signal (halfway between 220 Hz and 660 Hz) will be 440 Hz - and thus **in perfect tune with the original carrier frequency**.

The relationship between the **carrier frequency f_C** and **modulator frequency f_M** is crucial to the timbre.

With **identical frequencies** for carrier and modulator, you end up with a timbre which is like a sawtooth put through a low pass filter (see Fig. 9 on page 8).

With a modulator frequency double the carrier frequency, you end up with something very like a pulse wave (see Fig. 10 on page 8).

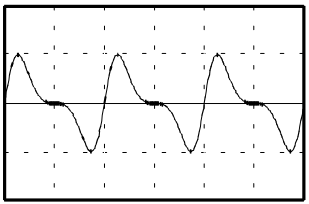

Fig. 9: $f_M = f_C$

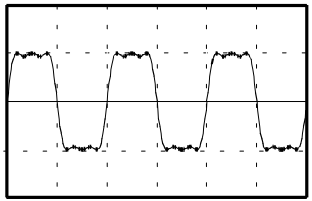

Fig. 10: $f_M = 2 \times f_C$

If you choose non-related frequencies for the carrier and modulator, you can produce all sorts of vocal-like sounds, and radio interference imitations (see Fig. 11).

The results can be surprising, as just a tiny change in frequency can produce a drastic timbral alteration or effect (compare Fig. 10 with Fig. 12).

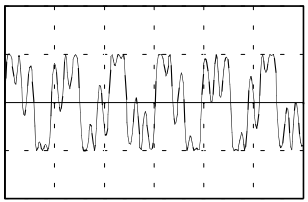

Fig. 11: $f_M = 3.3 \times f_C$

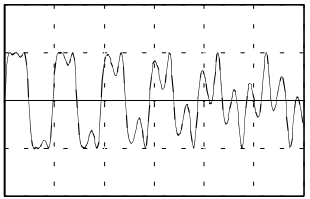

Fig. 12: $f_M = 2.05 \times f_C$

The other important influence on the end result is the intensity of the modulation - in other words, how high the Linear FM control ⑦ is set.

3.3 Synchronisation

What synchronisation means in this context is that the waveform of one VCO ('slave') is locked to the waveform of another ('master'), by connecting the audio out of the master VCO to the sync input of the slave.

In the A-111 two types of synchronisation are available: "**Hard Sync**" and "**Soft Sync**". There are accordingly **two Sync input sockets** (❹ and ❺).

Hard sync

Consider the following example (see Fig. 13 on page 9), in which the slave VCO is a triangle wave, and the master VCO is a rectangle wave. The waveform of the triangle wave changes direction every time the rectangle wave hits a rising or falling edge.
If the master VCO's frequency f_M is bigger than the slave VCO's f_S, then the slave's frequency is increased, to match the master exactly (see Fig. 13a: the 'synced' triangle wave T_R 's cycle is exactly equal to the cycle of the master VCO T_M).

If it's the other way round, and the slave is at a higher frequency than the master ($f_M < f_S$) then it still follows the master's frequency (Fig. 13 b: the slave's cycle T_R matches the master VCO's cycle), but the waveform is also actually altered by the changes in direction the master imposes on it. Harmonic sidebands are created, which can produce interesting timbral changes.

The way Hard Sync is implemented on the A-111 differs from the system on the A-110 standard VCO, which imposes a change of direction on the slave only at every other edge of the master waveform. Because the A-111 master sends a change to the slave at its positive as well as negative edges, when the slave frequency is higher than the master ($f_M < f_S$) the process produces richer side bands, and more interesting timbres.

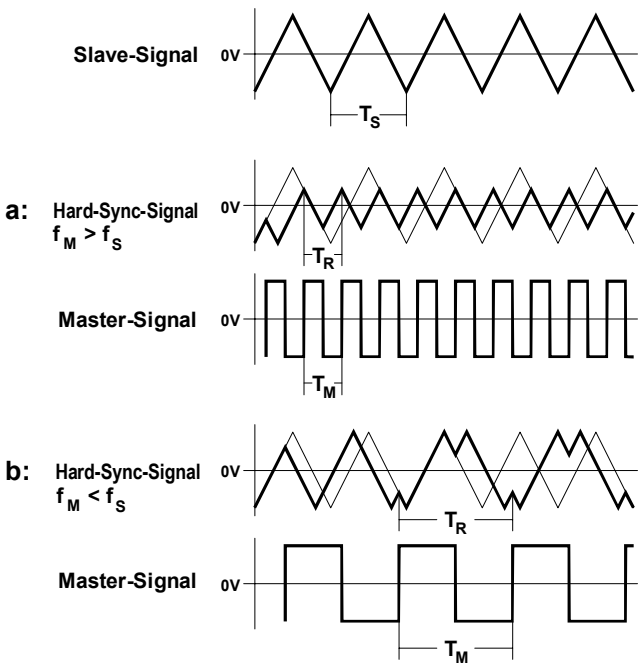

Fig. 13: Hard sync on the A-111

Soft Sync

In contrast with hard sync, soft sync produces **no change in the waveform** of the slave VCO. The master VCO simply forces the slave's waveform direction changes to match its own.

That simply means that the **slave VCO's frequency f_S** is increased, to become an **exact multiple of the master VCO's**.

In fig. 14 you can see that the frequency of the 'synced' triangle wave f_R is forced into being exactly double that of the master VCO f_M (or, to put it another way: cycle T_M is twice the length of cycle T_R).

Soft Sync, because there is no change in the slave's actual waveform shape, can't produce timbral variations. What it does instead is to lock **two or preferably more oscillators into a perfect harmonic relation**, to produce a particular sort of timbre.

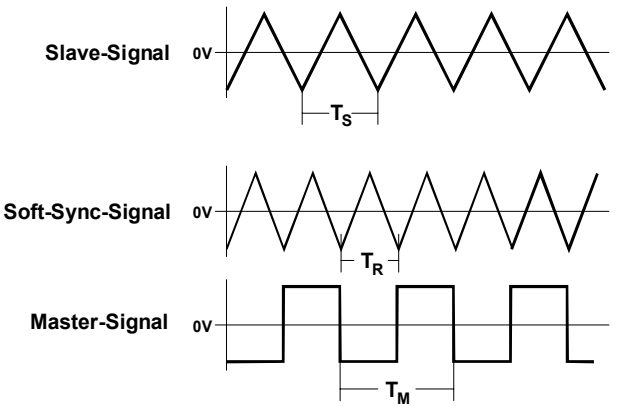

Fig. 14: Soft sync on the A-111

4. Controls

① Range

Footage (the octave of the fundamental) is controlled with this knob. Seven settings are available, covering a very wide frequency range.

② Tune • ③ Fine

Use these two controls to tune the VCO. The Tune control ② is for **coarse tuning**, and can alter the VCO's frequency roughly ± ½ octave. The Fine control ③ is for **fine tuning**.

For total accuracy, an electronic tuner is recommended.



If two or more oscillators are controlled by the same control voltages, and set to the same footage, you can use the Fine knob to de-tune one or more of the oscillators relative to each other. This can produce vibrato and chorus-like effects, perfect for soundscapes and generally rich timbres.

④ CV 2

The **pitch of the VCO** is controlled by the voltages present at inputs ❶ and ❷. The level of CV input ❷ can be controlled with the **Attenuator** ④ .

⑤ PW

Use control ⑤ to adjust the **pulse width** of the rectangle wave which is output at socket ⓾ (see fig. 2 in chapter 3.1).

⑥ PCV

The pulse width of the rectangle wave can also be altered or modulated by voltage control (see chapter 6, User examples). Patch a CV in at input ❻ and adjust its level with the **attenuator** ⑥.

⑦ Lin. FM

Use **attenuator** ⑦ to adjust the **amplitude** of the **linear FM signal** patched into socket ❸.

5. In- / Outputs

❶ CV 1 • ❷ CV 2

Sockets ❶ and ❷ are the **voltage control inputs** for controlling **VCO pitch**. The voltages at these inputs are summed. Input ❶ is set to exactly 1 V/octave, and is normally used for pitch control - for instance from a MIDI-CV interface, controller keyboard with 1V/octave output, or the CV output from an MAQ 16/3 sequencer.

Additionally there is an internal CV input with 1V/ octave connected to CV of the **system bus.** This signal (for instance the CV from a keyboard via a Bus Access module A-185), additionally controls the pitch of the VCO.

☞ If you are planning not to use the system bus CV - ie. if there's no CV signal being sent to the bus - you should disconnect the bus from the module, by removing jumper **J1** (at the top right of the main circuit board on the A-111, underneath the ribbon cable - see chapter 7, Appendix). If you don't, there's the possibility of interference, caused by the system bus CV line acting as an aerial. If you should later want to use the system bus CV, then simply re-install the jumper.

Input ❷ is used for **exponential FM** in the sub-audio as well as the audio range; the level of its signal sent to the VCO is controlled by attenuator ④.

❸ Lin. FM

Socket ❸ is the Linear FM input. Level is controlled by attenuator ⑦.

☞ This input is only suitable for modulation in the audio range (> 50 Hz), because with lower frequencies there is the possibility of pitch instability.

❹ H-Sync • ❺ S-Sync

Sockets ❹ and ❺ are the synchronisation inputs. Socket ❹ is for **hard sync**, and socket ❺ for **soft sync**.

❻ PCV

Socket ❻ is the **pulse width** voltage control input socket for the VCO's rectangle wave. The level of voltage can be adjusted with attenuator ⑥. Fig. 15 shows pulse width modulation with an LFO.

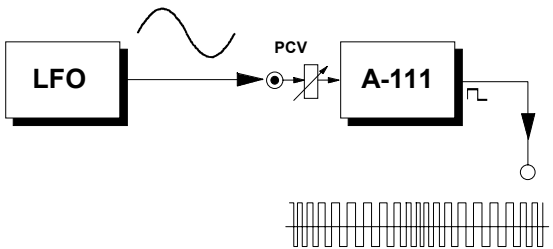

Fig. 15: Modulation of pulse width by an LFO

❼ ⊓⊔ • ❽ ⋀ • ❾ ⋀ • ❿ ∿

Sockets ❼ to ❿ are the VCO **outputs,** each sending out a different waveform: **rectangle wave** (❼), **sawtooth** (❽), **triangle** (❾) and **sine wave** (❿).

The frequency of the waveforms at outputs ❼ to ❿ is always the same for all.

7. Appendix

The diagram on the right shows the layout of the A-111 main circuit board.

If you want to disconnect the normalled CV 1 socket from the system bus INT. CV line (see also page 12), remove **Jumper J1** from the circuit board. It is just under the ribbon cable at the top right of the board. It will be easier to disconnect the cable before removing the jumper. Don't forget to re-connect the cable afterwards.

If at a later date you want to use the internal CV connection again, then simply reverse this procedure, to put the jumper back on.

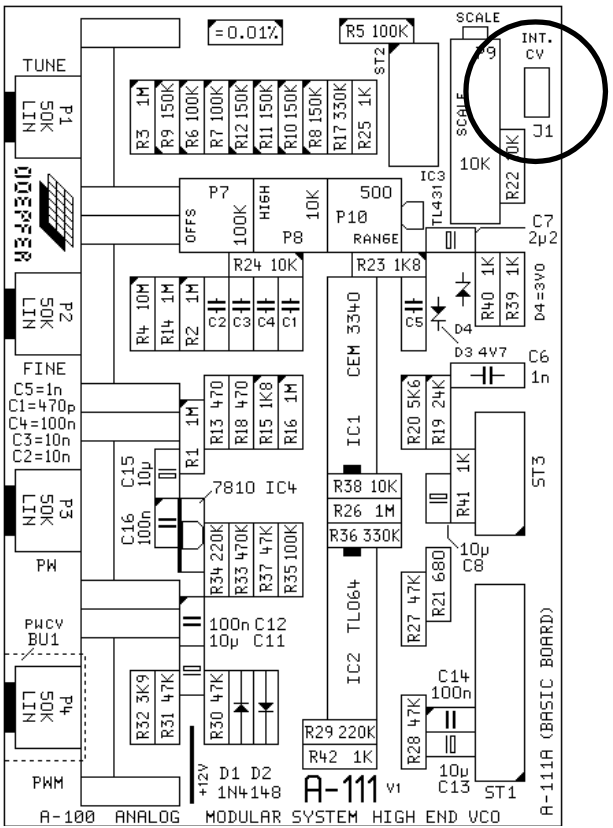

1. Introduction

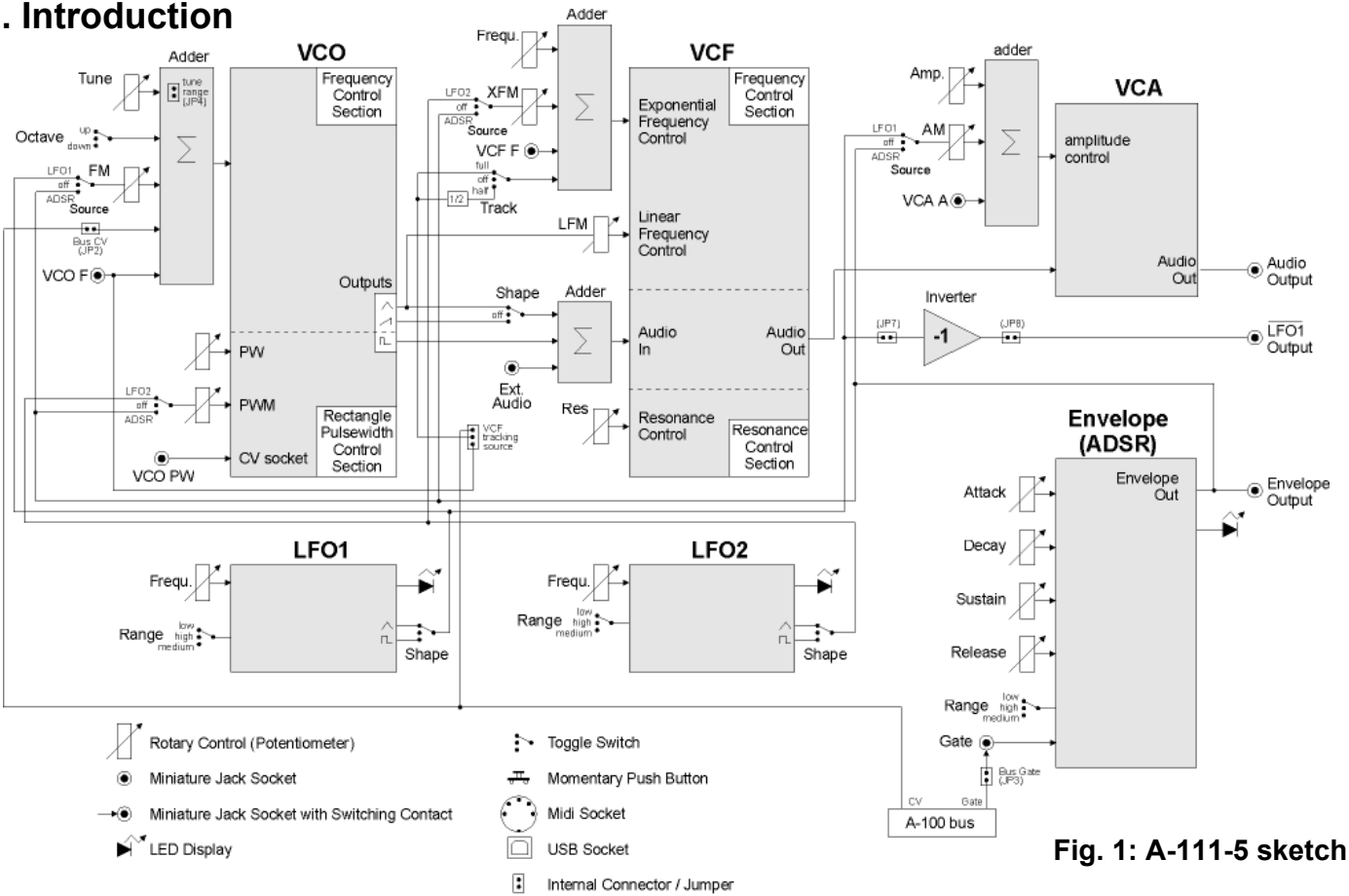

Fig. 1: A-111-5 sketch

Module A-111-5 is a complete monophonic synthesizer module that includes these components:

VCO

- manual tune control (with an internal jumper the range can be set to ~ +/-1 half an octave or ~ +/-2.5 octaves)
- range switch -1 / 0 / +1 octave
- frequency range about 10Hz ... 12kHz
- FM (frequency modulation) control with modulation source switch (LFO1 / off / ADSR)
- manual pulsewidth control for rectangle waveform
- PWM control with modulation source switch (LFO2 / off / ADSR)
- waveform switch (sawtooth / off / triangle)
- the sum of the waveform chosen by this switch and the rectangle is fed into the VCF (to turn the rectangle off the PW control has to be set fully CCW)
- external CV input for VCO frequency (1V/octave)
- external CV input for external PWM of the rectangle
- internal CV input for frequency (1V/octave) connected to the A-100 bus via jumper, the jumper can be used to interrupt this internal connection if not wanted

VCF

- 24 dB low pass
- ~ 12 octaves frequency range
- manual frequency control
- tracking switch half - off - full (internally connected to the external frequency CV input of the VCO, i.e. the VCF tracks to the VCO if the switch is set to "half" or "full" position)
- XM: exponential FM (frequency modulation) control with modulation source switch (LFO2 / off / ADSR)
- LM: linear FM (frequency modulation) control to modulate the VCF by the triangle of the VCO in a linear (!) manner
- manual resonance control (up to self oscillation)
- external audio input (this signal is added to the VCO signal)
- external CV input for filter frequency
- 1V/octave tracking for usage of the VCF as a sine wave oscillator (not as precise as the VCO but much better than most of the other filters)

VCA

- manual amplitude control
- AM (amplitude modulation) control with modulation source switch (LFO1 / off / ADSR)
- external CV input for VCA amplitude
- special control scale: exponential scale in the range from about -20dB to -80/90dB, linear scale from about -20dB to 0dB
  Remark: this special control scale results in a loudness behaviour that is a bit different from pure linear or exponential VCAs

LFO1 and LFO2

- manual frequency control
- waveform switch (triangle / off / rectangle)
- range switch (low, audio, medium)
- LED display (dual green/red color for positive/negative share of the signal)
- the inverted LFO1 signal is available as an additional socket (to use the LFO1 signal for external modules)
- an internal jumper can be used to select between the LFO1 signal or the inverted LFO1 signal

ADSR

- manual controls for Attack, Decay, Sustain, Release
- range switch (long, short, medium)
- blue LED display
- ADSR signal is available as an additional socket (to use the ADSR signal for external modules)
- Gate input connected to the A-100 bus via jumper, the jumper can be used to interrupt this internal connection if not wanted

Remarks:

- As the LFO frequencies can go up to moderate audio range (~ 5kHz) even audio FM effects of VCO (pitch and pulsewidth), VCF and ADSR are possible !
- If the VCO is turned off (waveform switch = center position, pulsewidth control = fully CCW) and the VCF resonance is set to maximum the module can be used as a sine oscillator. The sine can be modulated in a linear manner from the triangle wave of the VCO and by LFO2 in an exponential manner at the same time !
- from the factory the socket labelled "LFO1" outputs the inverted LFO1 signal. But as the module has several internal pin headers available even another signal may appear at this socket by changing the internal module patch. These six pin headers are available: LFO1 output, LFO2 output, ADSR output, inverter input, inverter output, output socket. The internal default patch is LFO1 -> inverter input, inverter output -> output socket (i.e. socket = inverted LFO1). But even another signal can be patched to this socket (e.g. inverted ADSR, non-inverted LFO1, inverted or non-inverted LFO2). It is also possible to add a blind panel next to the A-111-5 with a couple of sockets that are connected to the corresponding pins of the A-111-5 pc board. The in- and outputs of the VCO, VCF and VCA are not available as pin headers because the VCO, VCF and VCA are internally connected in the circuit which is used in this module.

Additional specifications:

- Front panel width: 24 HP / 121.6 mm
- Module depth: 40 mm (measured from the rear side of the front panel)
- Current: 80 mA

2. Overview

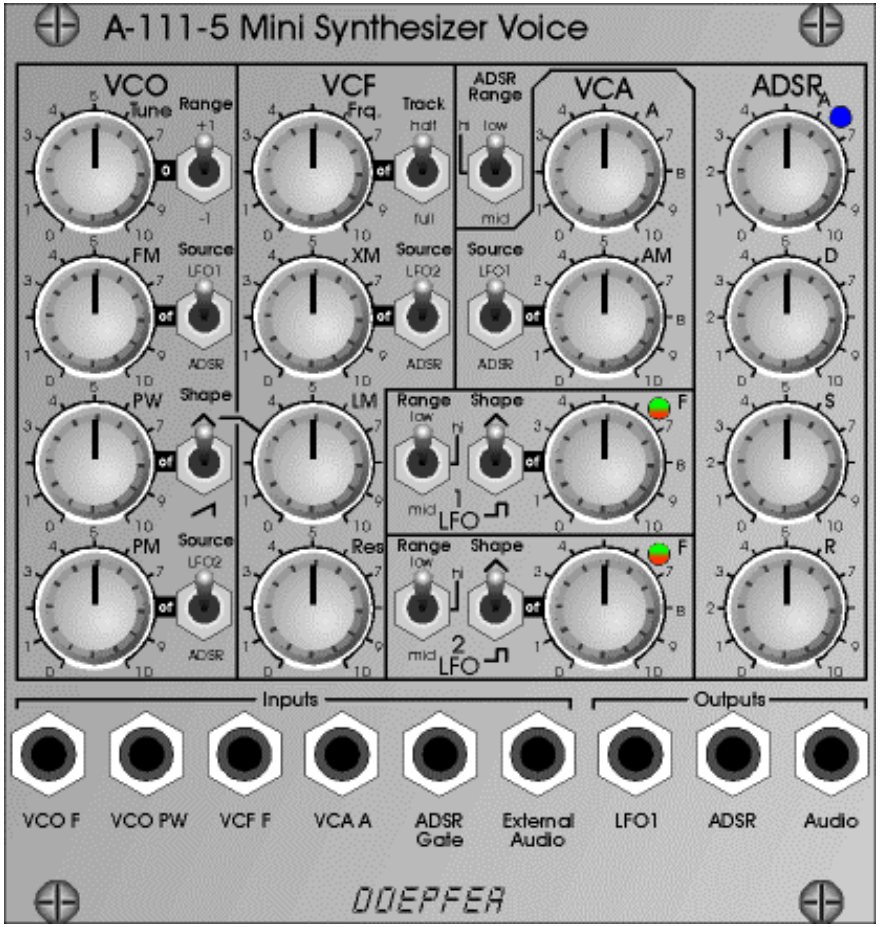

Fig. 2:
Front Panel
(full view)

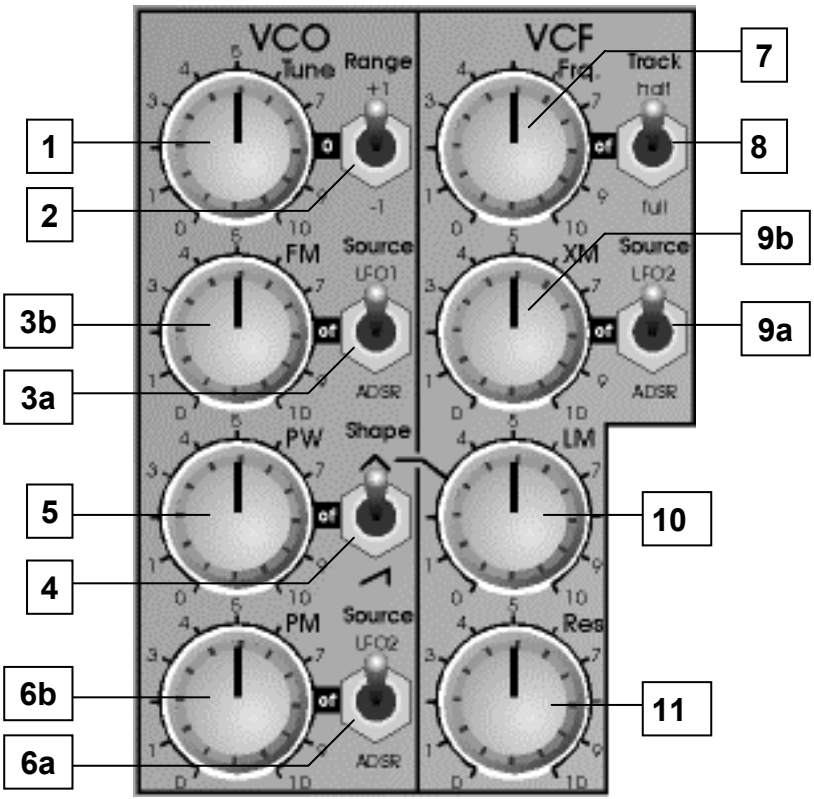

Fig. 2a: Front Panel (VCO and VCF)

1 VCO Tune
2 VCO Range Switch (Octave Switch)
3a VCO FM Source Switch
3b VCO FM Level
4 VCO Waveshape Switch
5 VCO Rectangle Pulsewidth
6a VCO Pulsewidth Modulation Source
6b VCO Pulsewidth Modulation Level

7 VCF Frequency
8 VCF Tracking Switch
9a VCF exponential FM Source Switch
9b VCF exponential FM Level
10 VCF linear FM Level
11 VCF Resonance

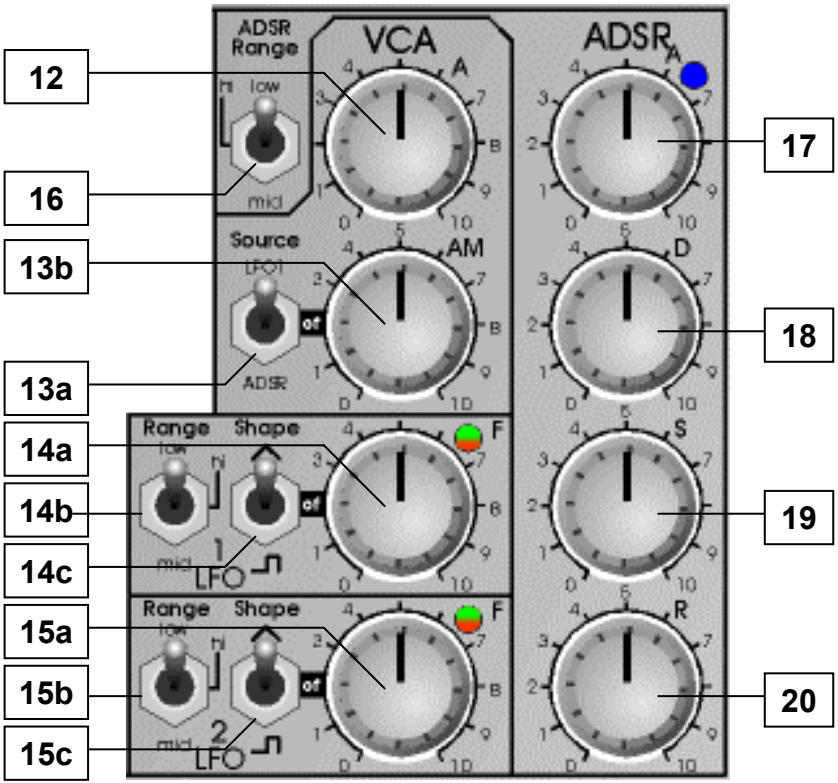

Fig. 2b: Front Panel (VCA, LFO, ADSR)

12 VCA Amplitude (Manual Gain)
13a VCA AM Source Switch
13b VCA AM Level

14a LFO1 Frequency
14b LFO1 Frequency Range Switch
14c LFO1 Waveform Switch

15a LFO2 Frequency
15b LFO2 Frequency Range Switch
15c LFO2 Waveform Switch

16 ADSR Range Switch
17 ADSR Attack Time
18 ADSR Decay Time
19 ADSR Sustain Level
20 ADSR Release Time

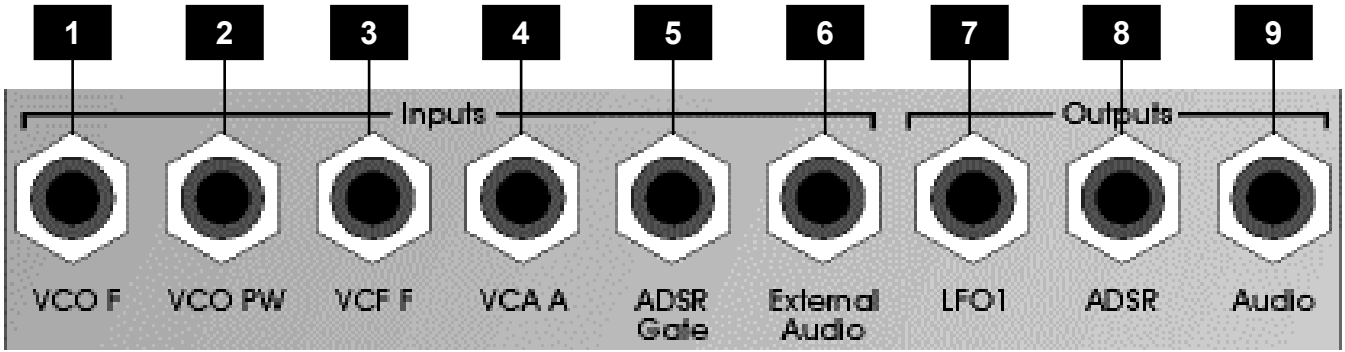

Fig. 2c: Frontpanel (Inputs and Outputs)

1 VCO Frequency Control Input (1V/Octave)
2 VCO Pulsewidth Control Input
3 VCF Frequency Control Input (1V/Octave)
4 VCA Amplification Control Input
5 ADSR Gate Input
6 VCF External Audio Input
7 Inverted LFO1 Output
8 ADSR Output
9 Audio Output

3. In- / Outputs

1 VCO Frequency Control Input (1V/Octave)

This input is used to control VCO frequency from the socket at the front panel. It works in addition to the control voltage that is applied to the CV line of the A-100 bus – provided that the corresponding jumper JP2 is set (details in the appendix) – and the internal frequency settings and modulations (controls 1, 2, 3a and 3b). Both CV inputs can be used simultaneously (e.g. bus CV controlled by the Midi interface A-190-2, front panel CV connected to the output of a A-155 sequencer or vice versa). For precise 1V/octave characteristic a buffered CV source is recommended (e.g. A-185-1, A-185-2, A-190-2).

Both CV inputs can be used to "play" the VCO by means of a control voltage that uses the 1V/octave standard or to modulate the VCO e.g. by an LFO or another VCO. To adjust the level of an external frequency modulation an attenuator (e.g. A-183-1) or amplifier (Ae.g. -183-3) can be used.

2 VCO Pulsewidth Control Input

This is an external input that can be used to control the pulsewidth of the rectangle by an external control voltage. It works in addition to the manual control of the pulsewidth (control 5) and the internal PWM source (controls 6a and 6b). The external PW voltage is not processed by the attenuator 6b. A voltage difference of about 5V is required to cover the complete pulsewidth range (e.g. 0…+5V or –2.5…+2.5V according to the setting of the manual pulsewidth control 5). If a smaller range is required an external attenuator module has to be used (e.g. A-183-1).

3 VCF Frequency Control Input (1V/Octave)

This input is used to control VCF frequency from the socket at the front panel. It works in addition to the internal frequency settings and modulations (controls 7, 8, 9a and 9b). The socket can be normalled to the bus CV line provided that the corresponding socket JP12 is installed (details in the appendix). For precise 1V/octave characteristic a buffered CV source is recommended (e.g. A-185-1, A-185-2, A-190-2). The external VCF control voltage is not processed by the attenuator 9b. To reduce the sensitivity of this CV input an external attenuator module has to be used (e.g. A-183-1).

4 VCA Amplification Control Input

This input is used to control VCA amplification (or loudness) from the socket at the front panel. It works in addition to the internal amplification settings and modulations (controls 12, 13a and 13b). The external VCA control voltage is not processed by the attenuator 13b. A voltage of about +5V is required to obtain the maximum amplification (provided that

controls 12 and 13b are fully CCW). To reduce the sensitivity of this CV input an external attenuator module has to be used (e.g. A-183-1).

5 ADSR Gate Input

This input is used to trigger the envelope generator (ADSR). A trigger voltage between +5V and +12V is required to trigger the envelope. The socket can be normalled to the bus gate line provided that the corresponding socket JP3 is installed (details in the appendix).

6 VCF External Audio Input

This is an external audio input that is added to the internal VCO signal. E.g. a noise generator, a second VCO or any other audio source can be used. The signal is processed by the VCF and the VCA of the A-111-5 module. The input sensitivity is about 1V. If the signal distorts the usage of an attenuator is recommended (e.g. A-183-1). If the external audio signal is too small an additional amplifier can be used (e.g. A-183-3) to increase the level.

7 Inverted LFO1 Output

By default the inverted LFO1 signal is available at this socket. It can be used to control other A-100 modules or other inputs of the A-111-5 (e.g. controlling the PW or the VCF frequency by LFO1). The internal jumpers (JP7, JP8, JP9, JP10) of the module can be set in another way so that a different signal appears at this socket (details in the appendix). They can be used to control other A-100 modules.

8 ADSR Output

This socket outputs the ADSR signal. It can be used to control other A-100 modules.

9 Audio Output

This is the audio output of the module. The typical output level is 1V.

4. Controls

1 VCO Tune
2 VCO Range Switch (Octave Switch)
3a VCO FM Source Switch
3b VCO FM Level

This group of elements is responsible for the frequency of the Voltage Controlled Oscillator (VCO).

Tune control 1 enables the tuning of the oscillator frequency in a range of roughly one octave (or ± ½ octave). By means of an internal jumper (JP4) the range can be extended to roughly six octaves. For details please refer to the appendix. The factory setting is one octave.

Switch 2 can be used to increase (upper position "+1") or decrease (lower position "-1") the basic frequency of the VCO by one octave.

Switch 3a and control 3b are responsible for the frequency modulation (FM) of the VCO. Switch 3a is used to select the FM source:

upper position: LFO1 = FM source
center position: no internal FM
lower position: ADSR = FM source

Control 3b is used to adjust the intensity of the internal frequency modulation. A potentiometer with an exponential scale is used to enable a finer resolution in the lower range.

In addition to the internal FM controlled by 3a and 3b the control voltages applied to the A-100 bus CV line and to the "VCO F" socket **1** modulate the frequency of the VCO as described in chapter 3.

With Tune control and Range switch 2 at center position, no frequency modulation (i.e. 3a = center or 3b = CCW) and no external control voltages (socket "VCO F" and A-100 bus CV line) the VCO frequency is about 65 Hz ("C").

4 VCO Waveshape Switch

This switch is used to select the "first" waveform:

upper position: triangle
center position: no wave
lower position: sawtooth

To this "first" waveform the rectangle can be added (see below).

A detailed description of the sound and overtone content (spectrum) of different waveforms can be found in the user manuals of the modules A-110 and A-111.

5 VCO Rectangle Pulsewidth
6a VCO Pulsewidth Modulation Source
6b VCO Pulsewidth Modulation Level

This group of elements is responsible for the additional rectangle wave ("second" waveform) that can be added to the waveform chosen by switch 4 . Control 5 is used adjust the pulsewidth of the rectangle manually. In the center position the pulsewidth is about 50% (provided that no Pulsewidth Modulation is active). In the fully CCW (or fully CW) position the rectangle wave is "off". This position has to be chosen if only triangle or sawtooth is desired as VCO waveform.

The pulsewidth adjusted by control 5 can be modulated by means of the switch 6a and control 6b . This function is called Pulsewidth Modulation (PWM) and used to obtain a fatter sound (especially if a slow triangle is used for the modulation) or for other sound effects.

Switch 6a is used to select the PWM source:

upper position: LFO2 = PWM source
center position: no internal PWM
lower position: ADSR = PWM source

Control 6b is used to adjust the intensity of the internal pulsewidth modulation.

Pay attention that the rectangle waveform can be turned off also by means of the PWM. If for example the manual control 5 can is set to position 2 or 8, LFO2 (triangle) is used as PMW source the rectangle wavform will disappear periodically if the PWM level control 6b is increased beyond a certain position. Same applies if ADSR is used but in this case the disappearance is controlled by the ADSR signal. If the rectangle waveform of LFO2 is chosen, the VCO rectangle can be turned "off" and "on" periodically with the frequency of LFO2.

In addition to the internal PW/PWM controlled by 5 , 6a and 6b the control voltage applied to the "VCO PW" socket **2** modulates the pulsewidth of the VCO rectangle waveform as described in chapter 3.

7 VCF Frequency
8 VCF Tracking Switch
9a VCF exponential FM Source Switch
9b VCF exponential FM Level
10 VCF linear FM Level

This group of elements is responsible for the frequency of the Voltage Controlled Filter (VCF). A 24dB Low Pass Filter with adjustable resonance is used in the module. In addition the filter features linear frequency modulation. A detailed description of different filter types can be found in the user manuals of the A-100 filter modules (e.g. A-120 or A-121).

Frequency control 7 adjusts the frequency of the filter manually over ~ 12 octaves (~ 5Hz ... 20 kHz).

Switch 8 can be used to add the control voltage applied to the VCO also to the VCF. This function is called *filter tracking* because the VCF tracks to the VCO:

upper position: half tracking
center position: no tracking
lower position: full tracking

If no tracking is selected the sound character becomes darker as the VCO frequency increases as the filter does not follow to the frequency of the VCO. If full tracking is selected the VCF follows to the VCO, i.e. if e.g. the VCO goes up one octave even the VCF frequency is increased by one octave. This position of the switch is also chosen if the filter is played as sine wave oscillator (see below). If half tracking is selected the filter frequency follows partly the VCO frequency (if the VCO goes up two octaves the filter frequency is increased by one octave). This position is chosen if an intermediate behaviour between full and no tracking is desired.

Switch 9a and control 9b are responsible for the exponential frequency modulation (XM) of the VCF. Switch 9a is used to select the XM source:

upper position: LFO2 = XM source
center position: no internal XM
lower position: ADSR = XM source

Control 9b is used to adjust the intensity of the internal exponential frequency modulation. A potentiometer with an exponential scale is used ! This may lead to an unexpected behaviour if the ADSR is chosen as XM source because usually linear potentiometers are used here (the influence of the ADSR to the filter frequency comes "later" than usually). But we decided to use a potentiometer with exponential scale here to enable a finer resolution in the lower range – especially for more sensitive control of FM effects in the audio range.

In addition to the internally generated frequency of the filter the control voltage applied to the "VCF F" socket **3** modulates the frequency of the VCF as described in chapter 3.

The LM control 10 is very unusual for a filter. The position of this control defines the intensity of the internal linear frequency modulation of the VCF by the triangle of the VCO. This feature is very useful for FM sounds with the VCF as sine oscillator (self-oscillation) that keep their harmonic content while the sound is played e.g. by a sequencer, keyboard or Midi/USB interface. If the tracking switch 8 is set to *full* the VCF tracks to the VCO and if linear FM is added the overtone structure remains almost unchanged.

11 VCF Resonance

With this control the Resonance or Emphasis of the filter is adjusted. This function emphasises the frequencies around the cut-off frequency. Close to the maximum position, the filter goes into self-oscillation. In this mode it behaves like a sine wave oscillator, and can be used as an alternative sound source. A detailed description of the resonance function can be found in the user manuals of the A-100 filter modules (e.g. A-120 or A-121).

As the control scale of the VCF in the A-111-5 has a very precise 1V/Octave behaviour the filter can be "played" over several octaves like a VCO if it's in self-oscillation. It's not as precise as a VCO but much better than most other filters.

Especially in combination with the linear FM (LM) very interesting sounds can be obtained, which are not possible with other filters.

12 VCA Amplitude (Manual Gain)
13a VCA AM Source Switch
13b VCA AM Level

This group of elements is responsible for the amplitude or loudness of the Voltage Controlled Amplifier (VCA).

Amplitude control 12 is used to adjust the loudness of the VCA from zero to maximum manually. In other synthesizers this control is sometimes called "initial gain". If the VCA is controlled by the ADSR this control is usually set to zero. Otherwise a tone will be heard permanently because the ADSR generates a positive control voltage. If the VCA is controlled by the LFO this control may be set to a medium value as the LFO signal is bipolar (i.e. positive and negative voltages are generated).

The VCA used in the A-111-5 has a very special control scale that has an exponential behaviour in the range from about -20dB to –80dB and a linear scale from about -20dB to 0dB. This scale results in a loudness behaviour that is a bit different from pure linear or exponential VCAs.

Switch 13a and control 13b are responsible for the amplitude modulation (AM) of the VCA. Switch 13a is used to select the AM source:

upper position: LFO1 = AM source
center position: no internal AM
lower position: ADSR = AM source

Control 13b is used to adjust the intensity of the internal amplitude modulation.

In addition to the internally generated amplitude of the VCA the control voltage applied to the "VCA A" socket **4** modulates the amplitude of the VCA as described in chapter 3.

Remark: The amplitude range of the VCA is 0...1, i.e. the maximum amplification is limited to 1 (though that's not a "real" amplification we use the same terms as usual for synthesizers). The full range is covered by the manual amplitude control 12 . If the sum of the manual setting and the added modulation (internal or external) exceeds the CV that corresponds to amplification 1 kind *of "control voltage clipping*" occurs. Even with the internal LFO and ADSR clipping is possible if control 13b is fully CW. To obtain a VCA loudness contour without CV clipping control 13b should not be set to maximum unless this behaviour is intended. The following picture shows the effect of CV clipping on the basis of a triangle LFO signal:

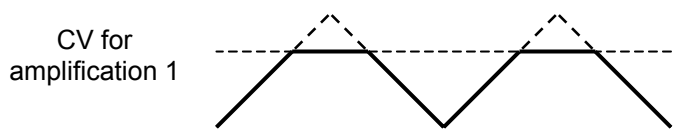

This behaviour was introduced intentionally as it leads to additional "trapezoid" or "clipped ADSR" loudness contours not available without clipping !

14a LFO1 Frequency
14b LFO1 Frequency Range Switch
14c LFO1 Waveform Switch

This group of elements is responsible for the adjustment of Low Frequency Oscillator 1 (LFO1).

Switch 13a is used to select the frequency range:

upper position:	low	~ 0.005Hz/200s ... 2.5Hz/400ms
center position:	high	~ 20Hz ... 10kHz
lower position:	medium	~ 0.1Hz/10s ... 50Hz/20ms

The lower position is the standard LFO setting. The center position is mainly for FM/PWM/AM effects in the audio range. The upper position is for very slow modulations up to several minutes range. As the frequency ranges overlap some frequencies can be generated in two ways (e.g. 1Hz is covered by low and medium range).

The frequency is manually adjusted by control 14a LFO1 Frequency.

The waveform switch 14c is used to select the waveform:

upper position:	triangle
center position:	no wave
lower position:	rectangle

The LED next to the control 14a displays the present frequency and waveform. Positive shares of the signal are indicated by green (or yellow) color, negative shares are red. The brightness of the LED corresponds to the voltage level (bright green means high positive voltage, dark red means small negative voltage). If rectangle is selected the LED switches between full green and full red as the rectangle has no slope.

Remark: If the LFO frequency goes above about 25 Hz, our persistence of vision means that the LED looks permanently on. Consequently only frequencies up to ~ 25Hz can be recognized. If both the green and red light source of the LED are "on" a frequency beyond ~ 25Hz is adjusted.

15a LFO2 Frequency
15b LFO2 Frequency Range Switch
15c LFO2 Waveform Switch

This group of elements is responsible for the adjustment of Low Frequency Oscillator 2 (LFO2). The functions of the controls and the LED are the same as for LFO1.

16 ADSR Range Switch
17 ADSR Attack Time
18 ADSR Decay Time
19 ADSR Sustain Level
20 ADSR Release Time

This group of elements is responsible for the adjustment of envelope generator (ADSR).

Switch 16 is used to select the time range:

upper position:	low	~ 0.1s ... 100s
center position:	high	~ 200us ... 0.2s
lower position:	medium	~ 2ms ... 2s

The times are specified for Attack. The Decay and Release times are about 3-5 times more because of their asymptotic character. E.g. in the Release state the envelope approaches the zero level in an asymptotic curve and it's difficult to define the release time (see picture on the right side).

The lower position is the standard time range. The center position is mainly for very short and percussive sounds, where the overall envelope time may be even shorter than one period of the VCO signal (e.g. a 200Hz VCO signal has a period of 2 ms, the shortest envelope time in the "high" range is about 400us which is only 20% of the VCO period).

The low range is intended for very long envelopes up to several minutes.

As the time ranges overlap certain envelope times can be generated in two ways (e.g. 50ms is covered by high and medium range).

The following picture shows the typical envelope curve of an ADSR signal:

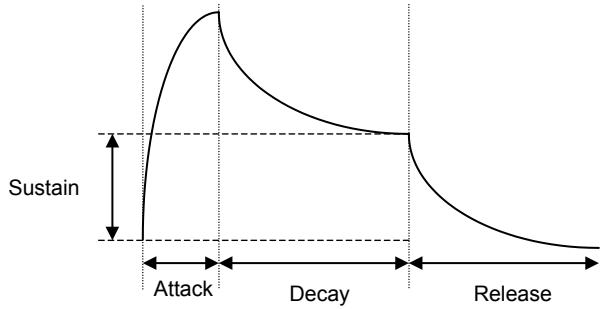

The picture shows the curve for medium settings of A, D, S and R. As the values of the four parameters can vary over a wide range the actual envelope may look totally different.

A more detailed description of the ADSR envelope can be found in the user manuals of other A-100 envelope generators (e.g. A-140, A-141 or A-143-2).

6. User Examples

Basic position



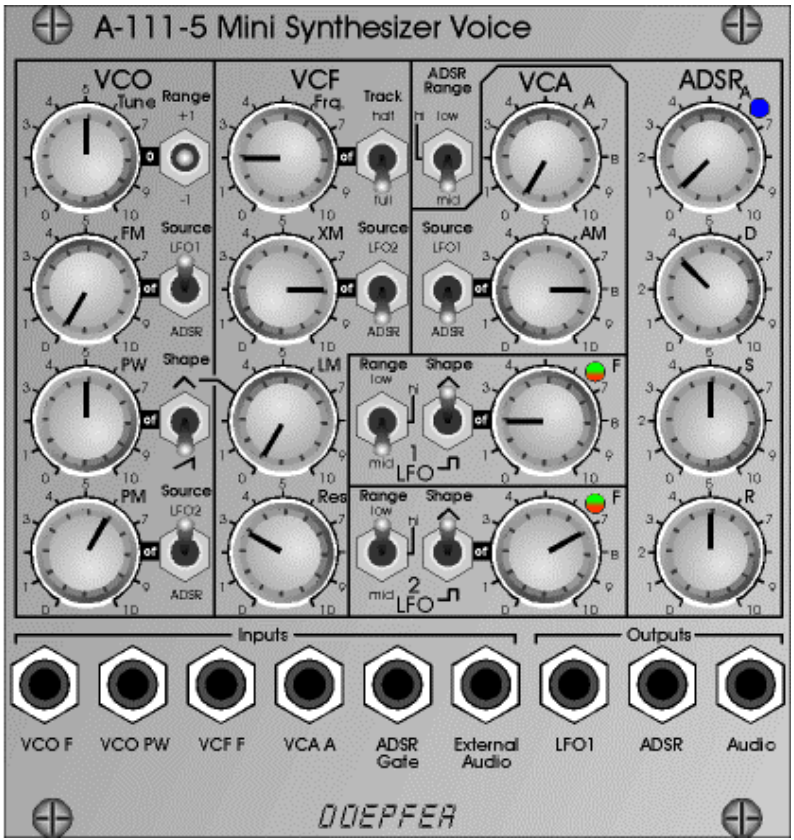

The basic position of the controls shown on the previous page is a good starting point as it generates a well-known standard synthesizer sound. The VCO uses a combination of sawtooth and rectangle with a slow pulsewidth modulation to obtain a fatter sound. The frequency modulation of the VCO if off. The VCF has a light resonance and is modulated by the ADSR. The linear modulation of the VCF (LM) is off. The VCF tracking is on (i.e. the VCF frequency follows the VCO frequency). The VCA is also controlled by the ADSR and has no initial gain. LFO1 is not used in this patch, LFO2 is used to control the PWM of the VCO. The ADSR range switch is set to medium, the ADSR has a short Attack time, a moderate Decay time and medium settings for Sustain and Release.

To obtain a sound both a CV and a Gate signal is required. CV and Gate can be supplied via the A-100 bus or the sockets at the front panel (please refer to the jumper settings in the appendix if you want to control the module from the A-100 bus).

Change the settings of the controls to find out how they affect the sound. You may e.g. some VCO frequency modulation by increasing the VCO FM control and play around with different frequencies and waveforms of LFO1.

Please look at the DARK ENERGY user's manual for more examples. It is available on our website as a pdf file for download. DARK ENERGY is the stand-alone version of the module A-111-5 and has exactly the same sound generation unit.

Appendix: Position and function of the jumpers (JPx) and trimming potentiometers (Px)

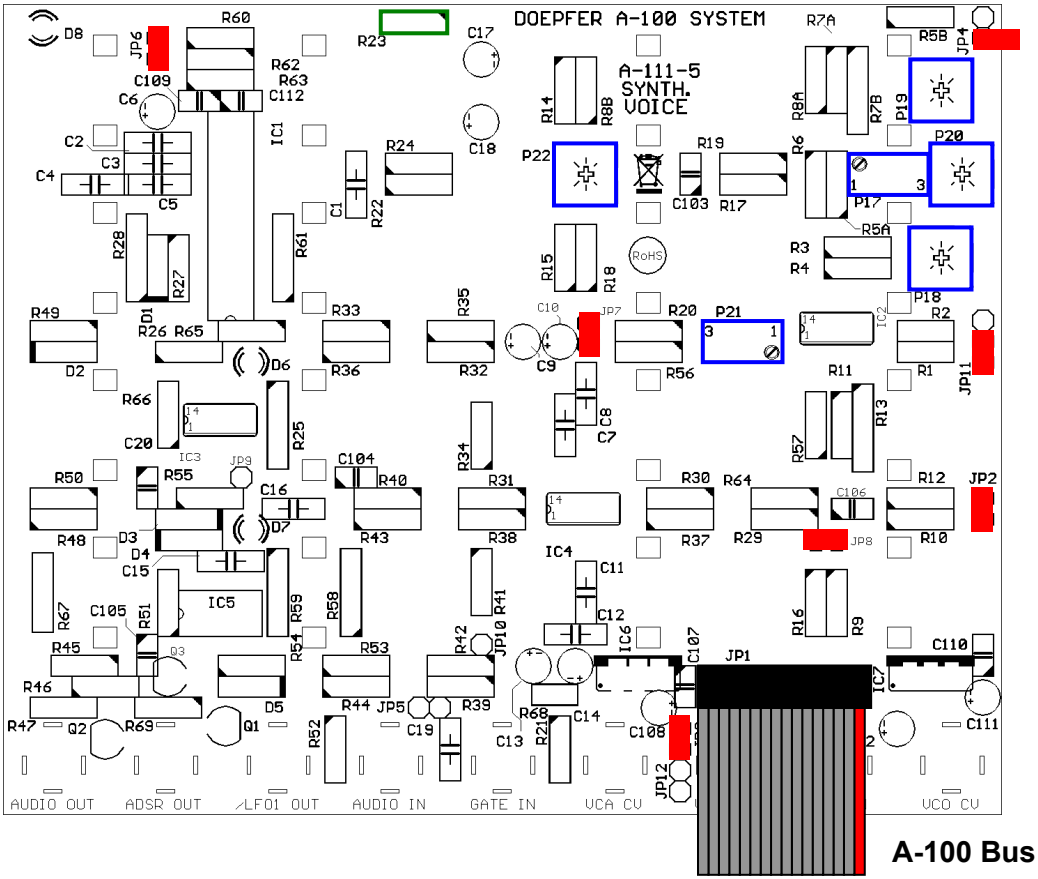

Jumper Overview

Name	Function	Explanation	Factory default
JP1	A-100 Bus	Bus connection	**bus cable**
JP2	CV Bus	Connects the CV line of the A-100 bus to the VCO frequency control voltage input (in addition to the VCO F socket)	**installed**
JP3	Gate bus	Connects the Gate line of the A-100 bus to the switching contact of the ADSR Gate socket	**installed**
JP4	VCO tune range	Adjusts the range of the VCO tune control: Installed → tune range ~ six octaves Installed → tune range ~ one octave	**not installed** (connected to one pin only)
JP5	Audio → Bus/+5V	Connects the audio output to +5V line (!) of the A-100 bus *Can be used only for special applications and if the +5V line of the A-100 bus board is unused. Otherwised problems will occur.*	**not installed**
JP6	Relation VCO/ext. signal	Adjusts the loudness relation of the internal VCO and the external audio signal: installed → VCO only not installed → VCO and external signal with same level	**installed** (one pin only)
JP7	Inverter input	Connects LFO1 output to the internal inverter	**installed**
JP8	Inverter output	Connects the output of the internal inverter to the socket LFO1 The factory default is inverted LFO1, the inverter can be used for other applications too (e.g. inverted ADSR or LFO2 output in combination with JP9 or JP10, or direct output of LFO1 or LFO2 without inverting)	**installed**
JP9	ADSR out	Internal ADSR output	- (single pin)
JP10	LFO2 out	Internal LFO2 output	- (single pin)
JP11	VCF tracking source	Selects the CV source for VCF tracking (can be turned on / off / half by means of the Track switch): Upper position: VCF tracking controlled by the CV line of the A-100 bus Lower position: VCF tracking controlled by the VCO F socket	**installed** (lower position)
JP12	CV Bus to VCF	Connects the CV line of the A-100 bus to the switching contact the VCF F socket.	**not installed**

Trimming Potentiometers Overview

Name	Function	Explanation	Factory default
P17	VCO Scale	adjusts the 1V/octave characteristics of the socket "VCO F" or the bus CV	**adjusted to 1.00V/octave**
P18	VCO Offset	adjusts the VCO frequency offset	**64 Hz @ center position of the VCO *Tune* control and *Range* switch in center position**
P19	VCO Octave Switch +	adjusts the upper position of the VCO range switch (+ 1 octave)	**adjusted to +1 octave**
P20	VCO Octave Switch -	adjusts the lower position of the VCO range switch (- 1 octave)	**adjusted to -1 octave**
P21	VCF Scale	adjusts the 1V/octave characteristics of the socket "VCF F" or bus CV (if the tracking switch is in the lower position "full")	**adjusted to 1V/octave, VCF in self-oscillation (*Resonance* control fully CW)**
P22	VCF Offset	adjusts the VCF frequency offset	**~ 10 Hz @ CCW position of the VCF *Frq.* control, VCF in self-oscillation (Resonance control fully CW, all VCF modulations off)**
R23	*Minimum VCA level*	*adjusts the minimum VCA level (i.e. when VCA A control is fully CCW and all VCA modulations are off)*	*10k (a smaller value leads to a smaller minimum VCA level)*

Remark: The specifications in this appendix are only for experienced users. Please do not change the settings of the jumpers or potentiometers if you do not have sufficient experience. Modules that have been misadjusted by the customer (jumpers and/or trimming potentiometers) are treated as repairs at the owner's expense ! The warranty is void if the module is modified or misadjusted by the customer (exception: changing the jumper settings is allowed without loosing the warranty).

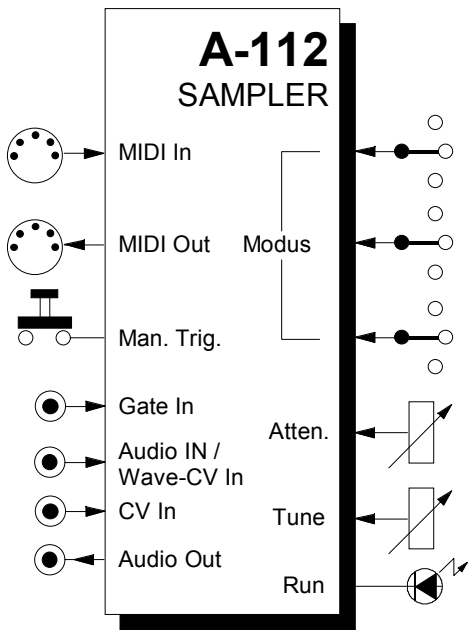

1. Introduction

Module **A-112** (**SAMPLER**) is a combination module, including a voltage controlled **8 bit Sampler** and a voltage controlled **Wavetable Oscillator**.

The module has the characteristic **"grungy" sound of the early 8 bit Samplers** and is a **welcome addition to the A-100's sound generating capabilities.** But it should not be compared with the polyphonic 16 bit MIDI samplers available on the market.

The module contains an **A/D converter** (ADC) for recording the audio signal (8 bit resolution), **digital memory** for storage of the the sampled signal, a **D/A converter** (DAC) for playback and the **control unit**.

The memory is divided into two **banks** (S1, S2) with 64 kbyte each. In wavetable mode each bank is arranged as 256 **pages** of 256 bytes.

The memory is **non-volatile**, i.e. after power-off the sampling data in the memory is maintained.

Sampling mode

In sampling mode the incoming audio signal is sampled with a **sampling frequency** that is controlled **manually and from the external control voltage input.** The audio signal is converted by the ADC into 8 bit digital data and **sequentially** written into the memory (memory address 0 ... 65 535). With a sampling frequency of 32kHz this corresponds to 2 seconds sampling time.
During playback the sampling data in the memory is read sequentially (address 0 ... 65535) and converted into the corresponding audio signal by the DAC. The sampling frequency in play mode is controlled manually and from the external control voltage input. Playback is stopped if the last memory address (65535) is reached.

Via **MIDI dump** the sampling memory can be sent to a computer for storing the data on hard-disk or any other storage device. The computer may also transmit sampling data to the A-112 via MIDI dump.

Wavetable mode

In wavetable mode the memory access is not sequentially but by **page**. The **page number** is selected by an **external voltage**. This voltage can be may generated manually (e.g. with the manual control voltage source A-176) or it may come from any other voltage source (e.g. LFO, ADSR, Sequencer). Both record and play take place in a **loop** whereby the **complete page** is always passed through. When reaching the end of a page the run control determines if a jump to another page takes place or the loop remains in the same page - depending upon the voltage controlling the wavetable/page.
Playback with a dynamic control voltage (e.g. ADSR, LFO, Random, Sequencer, MIDI-to-CV) results in “sweeping through“ the different pages (**Wavetable principle**). If the memory of the A-112 contains suitable wavetables in the 256 pages, the result is a voltage controlled **Wavetable Oscillator** with two control voltages: one for the audio frequency (pitch, tune), one for the wavetable number.

Normally suitable wavetables are generated by a computer and transferred to the A-112 via **MIDI-Dump.**

Effect mode

Additionally the module offers some effects, like **Delay**, **Reverse Delay** and **Pitch Shifter**. Of course, due to the 8 bit resolution these effects are not to be compared however with the results from high-end effect devices, but should be considered as a free extra gift for strange sounds.

2. SAMPLER Overview

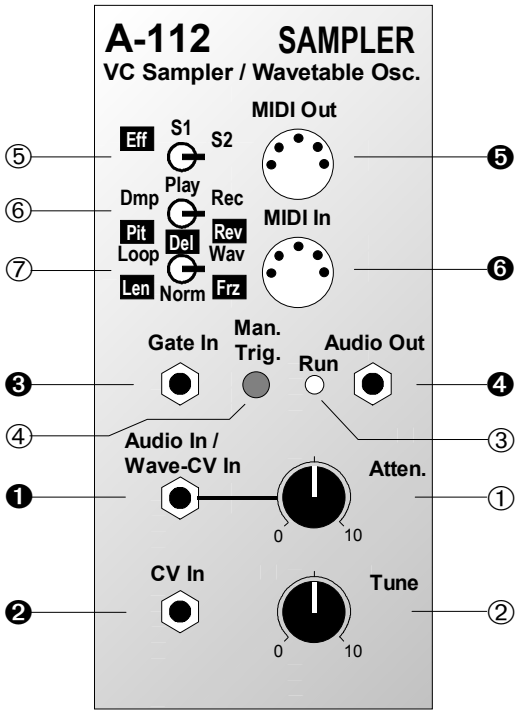

Controls:

① **Atten.** :	Attenuator for Audio/Wave CV Input ❶
② **Tune** :	Manual control for Sampling frequency
③ **Run** :	Gate indicator LED / overload warning during record
④ **Man. Trig.** :	manual trigger/start button
⑤ ... ⑦ **Switches**:	3-position switches for mode selection

In / Outputs:

❶ **Audio / Wave-CV In**:	Input for audio signal resp. wavetable control voltage in wavetable mode
❷ **CV In** :	pitch control input (1V/oct.) for tuning or sampling frequency
❸ **Gate In** :	Gate input
❹ **Audio Out** :	Audio output
❺ **MIDI In** :	MIDI input
❻ **MIDI Out** :	MIDI output

3. Controls

① Atten.

Control ① attenuates the **level** of the voltage at input ❶. Depending upon the mode this voltage is the **audio signal** (in sampling or effect mode) or the **wavetable control voltage** (in wavetable mode).

② Tune

The tune control ② is used to adjust the **sampling frequency** (during record) or the **pitch/tune** during playback (see table below).

Exception: In **wavetable record mode** one of the 256 **pages** is selected with the tune control (see following table). In this case the sampling frequency defaults to the last frequency that was set prior to switching into wavetable mode.

tune position	page (appr.)	sampling-freq. [kHz]	tune-position	page (appr.)	sampling-freq. [kHz]
0	0	2,0	6	154	18,5
1	26	2,9	7	179	26,5
2	51	4,2	8	205	38,5
3	77	6,1	9	231	56,2
4	103	8,8	10	255	79,4
5	128	12,7			

The data in the table are approximate values

☞ The voltage generated with the tune control is internally added to the voltage at input ❷. This input is normally used to control the pitch of the sampler/wavetable oscillator in play mode with an external control voltage following the 1V/oct standard (e.g. the A-190 MIDI-to-CV interface).

③ Run

LED ③ is used for different **monitoring purposes** depending upon the mode selected. A description of the respective function is given in the corresponding paragraph elsewhere in this manual.

④ Man. Trig.

Button ④ is used to trigger the sampler **manually.** Depending upon the mode selected a **Trigger** or **Gate** leads to different actions. A description of the respective functions is given in the corresponding paragraph elsewhere in this manual.

☞ The manual trigger generated with button ④ and the signal at the gate input ❸ are internally connected, to produce a gate/trigger signal used for all triggered/gated functions.

⑤	⑥	⑦	Function
S1, S2	Dmp	Loop	not implemented
		Norm	Dump a sample
		Wav	Dump a wave
	Play	Loop	Play a loop
		Norm	Play a sample
		Wav	Play a wave
	Rec	Loop	Record a loop
		Norm	Record a sample
		Wav	Record a wave
Eff	Pit	Len	Input sample length required
		Norm	Pitch Shift
		Frz.	Pitch Shift with "Freeze"
	Del	Len	Input sample length required
		Norm	Delay
		Frz.	Delay with "Freeze"
	Rev	Len	Input sample length required
		Norm	Reverse Delay
		Frz.	Reverse Delay with "Freeze"

⑤ Switch • ⑥ Switch • ⑦ Switch

With the 3-position **switches** ④ to ⑥ the operating mode is selected. The table on the left lists all possible modes. The modes are described in the following paragraphs.

In particular the gate signal (gate input ❸ / manual trigger ④) controls different functions in the respective operating modes.

☞ Please note that in some modes it is not sufficient to change the switches position to exit the mode. In the following description of the modes you will find detailed information on how to exit a selected mode.

- **Normal record mode**

⑤	⑥	⑦	Audio / Wave-CV In	Tune / CV
S1, S2	**Rec**	**Norm**	Audio signal	sampling frequency (while Gate = low)

In this mode an audio signal at audio input ① is recorded into one of the 2 memory banks S1 or S2 (depending upon the position of switch ⑤).

Gate = low :

In this case the **pre-listening mode** is active (LED ③ is off); the audio signal at input ① is digitized by the ADC, re-converted by the DAC and forwarded to audio output ④ for pre-listening.

The pre-listening mode contains an **overload/ clipping function**: as soon as the audio signal exceeds a predefined upper or lower threshold the **LED** ③ lights up for a short moment (about 10 ms). During this time the audio signal is not scanned and the output remains at the last DAC value. The onset of clipping (i.e. overload distortion) is immediately audible.

☞ The sound quality in the pre-listening mode is very poor. The quality if a signal is recorded and played back is much better!

The **pre-listening mode** is also used to find out and set the **sampling frequency**. When record mode is entered (see below) the last sampling frequency in pre-listening mode is used.

Gate = high:

When the gate level changes from low to high **Record** is triggered and the audio signal is sampled into the memory bank selected with switch ⑤. LED ③ is now on. Recording starts at address 0 and continues until the last address (65 535) is reached and LED ③ turns off. If gate turns low before the end of the sampling memory (address 65 535) is reached the record process stops. You can use this function to sample chosen segments of sound.

- **Normal play mode**

⑤	⑥	⑦	Audio / Wave-CV In	Tune / CV
S1, S2	**Play**	**Norm**	- - - - - - -	sampling frequency

In this mode a previously recorded sample in the sampling memory (S1 or S2, depending upon the position of switch ⑤) is played back.

Gate = low:

The module is waiting for gate = high; LED ③ is off (see fig. 1 - a).

Gate = high:

When the gate level changes from low to high **Playback** is triggered and the audio signal in the memory bank is played back. LED ③ is now on. Playback starts at address 0 and continues until the last address (65 535) is reached and LED ③ turns off. Even if the gate goes low before the end of the sampling memory is reached the playback continues (see fig. 1 - b).

Only if the gate goes low and high again before the end is reached the sample is **retriggered**, i.e. the playback starts again at address 0 (see fig. 1 - c).

If the gate is still high when the end of the sample memory is reached the playback stops (i.e. no loop if gate remains high). For this purpose the loop mode is used.

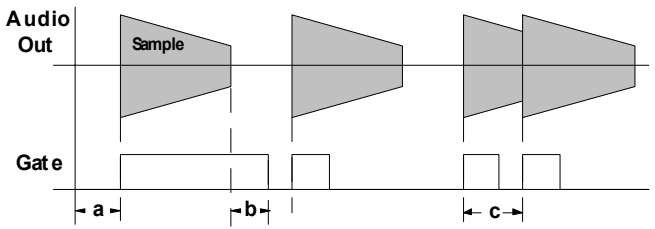

fig. 1: normal play mode

- **Loop record mode**

⑤	⑥	⑦	Audio / Wave-CV In	Tune / CV
S1, S2	**Rec**	**Loop**	audio signal	sampling frequency (only if Gate = low)

This mode is very similar to the normal record mode (see above). The only **difference to the normal record** mode is that **record continues** when the **end of the sample** memory is reached and the **gate level is still high**.

In this case the record starts again at the first memory address. This loop continues (LED ③ on) until gate turns low.

- **Loop play mode**

⑤	⑥	⑦	Audio / Wave-CV In	Tune / CV
S1, S2	**Play**	**Loop**	- - - - - - - - -	sampling frequency

In normal play mode the playback stops if the end of the sample memory is reached. The loop play mode allows the **continuous playback of a pre-defined section** of the sample memory.

Gate function:

As long as the gate level is high the sample is played continuously. When the end of the sample is reached, playback starts again at the beginning (see fig. 2 - a). LED ③ is on.

As soon as the **gate goes low** the present position within the sample is defined as **loop end** (see fig. 2 - b). Playback starts at the beginning (address 0) and runs continuously from the beginning to the loop end as long as the gate level remains low (see fig. 2: loop 1).

If gate turns high (see fig. 1 - c) the loop end is cancelled and the sample playback uses the full range again (i.e. loop end = end of sample memory, see fig. 2 - d).

If the gate goes low again a new loop end is set (see fig. 2 - e, loop 2).

To **exit** loop play mode a short **trigger pulse** (max. duration 100 ms) is required (see fig. 2 -f).

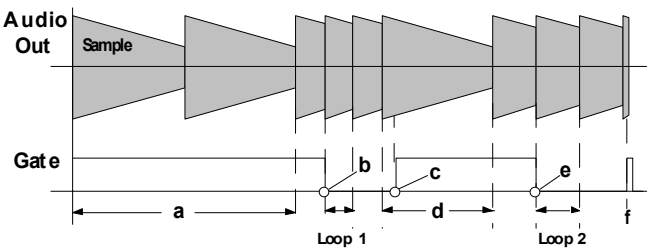

fig. 2: Loop play mode

- **Wave record mode**

⑤	⑥	⑦	Audio / Wave-CV In	Tune / CV
S1, S2	**Rec**	**Wav**	audio signal	sampling frequency (if gate = low) / wavetable number (if gate = high)

In this mode one or more **wavetables** are recorded into the memory bank selected.

The **number of the wavetable (page)** results from the position of the **Tune control** ② and the voltage applied to the **CV input ❷**.

Gate = low :

The **pre-listening mode** is active (LED ③ is off); the audio signal at input ① is digitized by the ADC, reconverted by the DAC and forwarded to audio output ④ for pre-listening.

All functions and controls (overload/clipping, adjustment of sampling frequency ...) are the same as in the normal record mode (see above).

Gate = high:

When the gate goes high **record** starts (**LED** ③ is **on**). The last sampling frequency while gate was low is used as the sampling frequency. The wavetable number (page) is derived from the position of the **Tune control** ② and the voltage applied to the **CV input ❷**. The audio input is sampled and 256 bytes are written into the wavetable memory (page) selected.

When the last byte of the page (i.e. byte no. 256 of the page) is written record starts again at the first byte of the page. This process continues (LED ③ on) until the gate goes low.

The record process stops immediately at the present position as soon as the gate goes low. You can use this function to sample chosen segments of sound.

When reaching the last position of the current wavetable page the number of the next page is defined by the position of the Tune control ② and the voltage applied to the CV input ❷ (provided that gate is still high). Consequently different pages may be selected during record if the control voltage (e.g. from an ADSR) or the position of the tune knob is changed .

In fig. 3, the CV input is fed from the sine output of a LFO. The sampling frequency is 32kHz, the LFO frequency 21 Hz. The resulting wavetable pages are shown in the boxes.

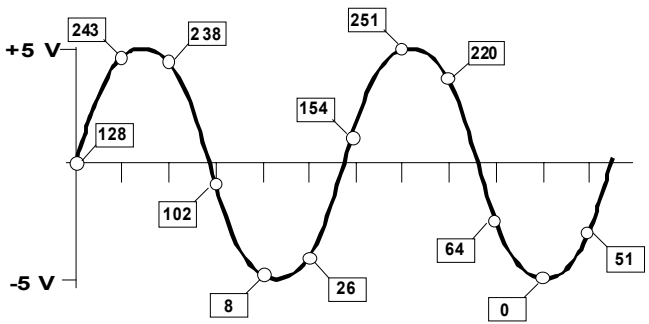

fig. 3: wave record mode with modulated wavetable page number

Waves recorded in this way may be played back in the normal play mode, often leading to some fairly drastic effects.

- **Wave play mode**

⑤	⑥	⑦	Audio / Wave-CV In	Tune / CV
S1, S2	**Play**	**Wav**	Number of wave-page	sampling frequency

In this mode A-112 works as a **wavetable oscillator**. The **wavetable number** (page) that determines the sound of the audio output is set by the control voltage applied to the **audio/wave CV input ❶**

Gate = low:

The module is waiting for gate = high; LED ③ is off.

The initial sampling frequency (i.e. the first frequency when gate turns to high, see below) is set. **Prelistening mode** is also used to find out and set the **sampling frequency**.

Gate = high:

When the gate goes high the wavetable number (audio/wave input) and the sampling frequency (tune control and CV input) are set, and playback of the recorded wavetable begins, using the sampling frequency previously set (LED ③ turns on). When the end of the wavetable is reached the process starts again,

i.e. the next wavetable and the next sampling frequency are determined. This continues until the gate goes low.
When a dynamic voltage -2.5...+2.5V is used as the wavetable control voltage (e.g. ADSR output connected to audio/wave input ❶) wavetable are swept.

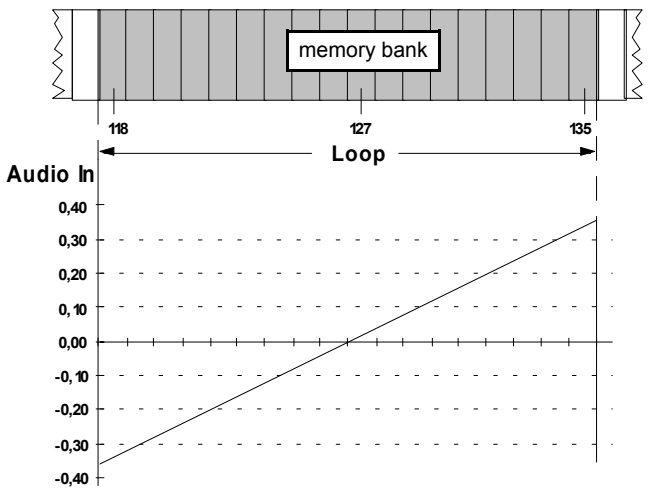

fig. 4: wavetable selection with CV voltage applied to audio/wave input

- **Normal dump mode**

⑤	⑥	⑦	Audio / Wave-CV In	Tune / CV
S1, S2	**Dmp**	**Norm**		

In this mode a sample (bank 1 or 2) can be transferred as a **MIDI system exclusive string** (SysEx **Dump**) via MIDI out ❻. You can then record this string with a MIDI computer sequencer or download it using a MIDI dump program for storage on hard disk or any other storage device. The sampling frequency is also transferred within the string.

It is also possible to receive a **sample dump** via MIDI input ❺. The dump is written to the memory bank selected (S1 or S2).

Gate = low:

In this state (LED ③ off) MIDI input ❺ is scanned. As soon as an **incoming sample dump** is detected LED ③ turns on and the dump data is written into the memory bank selected.
If a **sample dump request** is received via MIDI IN the sample memory is transferred via MIDI OUT as a SysEx string. LED ③ turns on as well. Refer to the description of MIDI input and output in chapter 5.

☞ During Data transmission via MIDI OUT the MIDI input and gate are not scanned. Therefore a new dump cannot be triggered by mistake.

Gate = high:

As soon as the gate goes high (e.g. by pressing button ④) the sample memory is transferred as a SysEx dump via MIDI OUT and LED ③ turns on (same function as sample dump request via MIDI in).

☞ To trigger a sample dump manually a short high gate level is sufficient. It is not necessary to keep the gate level high.

- **Wave dump mode**

⑤	⑥	⑦	Audio / Wave-CV In	Tune / CV
S1, S2	**Dmp**	**Wav**		wave page number

This mode is very similar to the normal dump mode (see above). The **difference from the normal dump mode** is that the data of a **single wavetable** (page) of 256 bytes is **transferred** instead of the complete sampling memory of a bank.

The **number of the wavetable** is determined by the position of the tune control ② and the voltage applied to CV input ❷.

- **Delay mode**

⑤	⑥	⑦	Audio / Wave-CV In	Tune / CV
Eff	**Del**	**Norm**	audio signal	sampling frequency

This mode generates a simple **delay**. The incoming audio signal is delayed and passed to the audio output.

☞ **The memory bank S2** is overwritten in this mode!

Principle: The incoming audio signal is sampled and written into a memory position in bank S2. Before this the old value at this position is transferred to the audio output. The number of the memory position is increased by 1 and the process is repeated. When reaching the last memory position the process starts at memory position 1. The last memory position depends upon the length (Len, see below).

The **length** of the delay memory is defined by the parameter **Len** (see below). The maximum length is the complete sampling memory (64kbyte = 65536 bytes). With a sampling frequency of 32 kHz this corresponds to 2 seconds delay time. The **actual delay time** is decided by a combination of the **length of the delay memory** (Len) and the **sampling frequency**.

Gate = low:

The module is waiting for gate = high; LED ③ is off. The initial sampling frequency is set.

Gate = high:

The delay mode is started; LED ③ turns on. Retrigger is active, i.e. a gate transition to low and back to high starts the delay mode again.

☞ Moving from delay mode directly to delay with freeze is not possible. To perform this one has to interrupt the delay mode (switch ⑤ to S1/S2 or switch ⑦ to Len) and then select the desired mode.

By feeding the A-112 output back to its input one obtains a repeat or echo (see fig 5). Beware: too much feedback leads to an avalanche-like effect. In this case the feed back component has to be reduced.

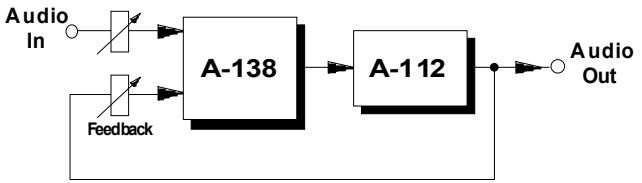

fig. 5: Echo

- **Reverse delay mode**

⑤	⑥	⑦	Audio / Wave-CV In	Tune / CV
Eff	**Rev**	**Norm**	audio signal	sampling frequency

This mode is the same as the delay mode but the playback of the delayed signal takes place in reverse.

☞ **Memory bank S2** is overwritten in this mode!

Principle: Same as the normal delay mode but writing into the delay memory is performed forward, and reading the delay memory is performed backward. As this is a very simple “bog standard“ algorithm, overlapping effects may occur and lead to interference, glitches or clicks in the audio output signal.

☞ All functions and controls (sampling frequency, length of delay memory ...) are the same as in the normal delay mode (see above).

- **Pitch shift mode**

⑤	⑥	⑦	Audio / Wave-CV In	Tune / CV
Eff	**Pit**	**Norm**	audio signal	sampling frequency

In pitch shift mode the audio input signal is sampled and played back at the audio output with shifted pitch/ tuning.

☞ **Memory bank S2** is overwritten in this mode!

Principle: The incoming audio signal is sampled with a fixed sampling frequency (about 16 kHz) and written into memory bank S2. Each sample increases the memory position by 1. Simultaneously the memory is read out with a sampling frequency that is determined by the Tune control ② and the voltage applied to the CV input ❷.
If the read frequency is nearly the same as the write frequency (i.e. about 16 kHz) no pitch shift occurs - just a delay depending upon the memory length (Len).

If read and write frequency differ the audio signal is read out faster or slower and the pitch shift effect occurs.

Because of this very simple “bog standard“ algorithm overlapping effects may occur and lead to interference, glitches or clicks in the audio output signal.

☞ All functions and controls (read sampling frequency, length of delay memory ...) are the same as in the delay mode (see above).

Very interesting sounds can be obtained if the original audio signal is mixed with the pitch shifted signal of the A-112 (using a mixer A-138a/b).

- **Freeze option**

⑤	⑥	⑦	Audio / Wave-CV In	Tune / CV
Eff	**Del, Rev, Pit**	**Frz.**	audio signal	sampling frequency

The effect modes delay, reverse delay and pitch shift may also run with the **Freeze option**.
In this case the audio input is no longer sampled and the memory data no longer overwritten. Instead, the **frozen** memory data are played back. The parameters memory **length** (Len) and **sampling frequency** determine the effect.

Gate control:

The module is waiting for gate = high; LED ③ is off. The initial sampling frequency is determined.
If only a short **gate pulse** appears (i.e. gate turns to high only for a short time and becomes low again) the effect selected functions **without freeze**. LED ③ is off.

As soon as **gate turns high and remains high** the **freeze option** of the effect in question is **active**. LED ③ is on. The data in the memory are “frozen“ as long as the gate remains high.

When **gate turns low** the **freeze option** is **cancelled** and the module returns to the respective effect without freeze. To re-activate the freeze option, one simply has to turn the gate to high.

☞ Changing directly to the normal effect without freeze (permanently) is not possible. To perform this one has to interrupt the freeze option (switch ⑤ to S1/S2 or switch ⑦ to Len) and select the desired mode after this.

- **Effect parameter "Len"**

⑤	⑥	⑦	Audio / Wave-CV In	Tune / CV
Eff	**Del, Rev, Pit**	**Len**		memory length for the effect in question

In this operation mode the parameter **Len** is adjusted. This value determines the **length of the sampling memory** in bank S2 used for the effect modes.

Gate = low:

In this state the **Tune control** ② adjusts the **Len** parameter. The resolution for the length is one page (256 bytes). The tune knob turned fully to the left (ccw position 0) corresponds to one page, turned fully to the

right (cw position 10) it corresponds to the whole memory (64 kbyte or 256 pages). During the adjustment of Len with the tune control no external voltage should be applied to the CV input ❷.

Gate = high:

As soon as the gate goes high the current position of the tune control is used to set the Len value.

For the different effect modes the following notes also apply:

Delay, Pitch Shift:

The **factory setting** is **4 kBytes** (i.e. 16 pages). This corresponds to a tune control setting of about 0.5.

Reverse Delay:

The **factory setting** is **64 kBytes** (i.e. 256 pages). This corresponds to tune control setting 10.

The reverse delay effect seems to go very strange with tune control settings of about 1.5 down to 0, i.e. the reverse delay becomes a normal delay, but with extreme distortion.

4. In / Outputs

❶ Audio In / Wave-CV In

At this socket the **audio input signal** is patched in (i.e. the signal to be sampled or used for effects). This is a line level input (+/-2.5V or 5Vss). Note that the audio signal must be at line level – microphones won't give enough output.

☞ Exception: In **wavetable play mode** this is the wavetable control voltage input -2.5...+2.5V (not an audio signal input)!

❷ CV In

Control voltage input for **sampling frequency** during **record, or pitch/tune** during play. This input follows to the 1V/oct. standard and has 1/4 semitone resolution.

☞ The control voltage applied to CV in ❷ is internally added to the voltage generated by the tune control ②.

❸ Gate In

At the **Gate input ❸** the **gate signal** is patched in. The function depends upon the mode selected.

☞ The gate signal applied to this socket is internally connected with the signal coming from the button ④. If either of these is high, the module gate is high.

Gate In ❸	Man. Trig. ⑦	result. Gate
high	high	high
high	low	high
low	high	high
low	low	low

❹ Audio Out

Socket ❹ is the **audio output** of the A-112.

☞ The audio signal from the DAC passes a simple **low-pass filter** to suppress the sampling frequency. It is possible to bypass this internal filter if a more sophisticated low-pass filter (A-120, A-121, A-122) is used or if the sampling frequency should not be suppressed for special effects. For this the internal jumper J1 has to be removed.

❺ MIDI In

Socket ❺ is the **MIDI input** used to receive sample data (SysEx dump) via MIDI. For this the dump or wave dump mode has to be selected (see above) and the gate has to be low.

Moreover a sample dump request or a wave dump request message can be received by the A-112 in this mode.

The MIDI SysEx message for a **sample dump request** has the following structure:

F0	
00 20 20	Doepfer SysEx-ID
7F	
< bank>	bank number (00 : S1, 01 : S2)
F7	

When receiving this message the A-112 transmits at the **MIDI output ❻** a **sample dump** (LED is on). The length of the dump is 74.909 bytes altogether. Additionally the current sampling frequency is transmitted.

The SysEx message for a **wave dump request** has the following structure:

F0
00 20 20 Doepfer SysEx-ID
7D
< Wave-Nr., Bit 7 - 1 >
< Wave-Nr., Bit 0 >
F7

As the data range in a SysEx message is 0...127 (7 bit) the wave number requires 2 bytes.

Example: Dump of wave no. 201 ("11001001"):

F0
00 20 20
7D
64 "110100"
01 "1"
F7

When it receives this message the A-112 **transmits a wave dump** at the **MIDI output ❻** (LED is on). The length of the dump is 305 Bytes altogether. Additionally the current sampling frequency is transmitted.

❻ MIDI Out

The **MIDI output ❻** transmits MIDI dump information during sample or wave dumps.

5. User Examples

The obvious application of the A-112 is the sampling and playback of external sounds or sounds generated with other A-100 modules. On top of this the module opens up a huge number of sound experiment possibilities – far too many to be covered in this manual.

The following examples concentrate on **wavetable** applications of the module.

Wavetable Oscillation

The wavetable oscillator feature and the loop feature of the A-112 have already been described in chapter 3. Smooth sequencing of the wavetables with an external control voltage requires a certain amount of subtle intuition - and additional A-100 modules - as it is necessary to control the offset and amplitude of the voltage applied. You do then also have the ability, though, of selecting a specific starting wavetable (offset) and starting the up/down sweep through the waves (amplitude) at this particular point.

For the most effective wavetable control we recommend using the A-129/3 (attenuator and offset generator, see below).

The control voltage range 0...+5V corresponds to the 256 tables (0V = table no. 1, +5V = table no. 256). To move from one table to the next one a voltage difference of about 0.02 V (5V/256) is required.

Example: To sweep with an LFO (Triangle output) through 64 tables starting with table no. 96 (i.e. passing through the tables 64...128) the following conditions are required: An offset voltage of 96*5V/256 = 1.875V and an attenuation of the LFO signal to 64*5V/256 = 1.25V (peak-to-peak). Using a A-129/3 the offset voltage is adjusted with the offset control and the LFO level with the attenuator control.
If each of the 64 tables are to be used - i.e. none of the tables is to be skipped - there is a maximum frequency that the controlling signal (LFO) must not exceed. If the sampling frequency is 32kHz each wavetable (256 byte) takes 8 milliseconds. All 64 tables take 512 milliseconds. This corresponds to 1.95 Hz LFO frequency. Consequently the frequency of the LFO must be about 2 Hz or less to play each table without skipping. This sounds very mathematical and theoretical but it is a good idea to understand these facts as some unforeseen things may happen if one ignores these details. In practice of course the resulting sound is all that counts.

Sequencer-controlled wavetable playback

In the patch in fig. 6 the Analog/Trigger Sequencer A-155 controls the **playback of different wavetables** (step 1, 4, 5 and 7).

The sawtooth output of the LFO, patched via offset generator A-129/3 generates the control voltage to sweep through the wavetables. This voltage is added to the sequencer voltage (post out 2). Thus different ranges of the wavetable memory are used for each step (displayed by different sound symbols). Regarding offset, attenuation and LFO frequency, see the notes on the previous page.

The sequencer control voltage Post Out 1 is used to control the decay of an VC-ADSR, i.e. for different decay times for each step.

Instead of an LFO an ADSR or VC-ADSR may be used. The attack control is used in this case to adjust the speed of sweep (decay, sustain and release control = 0).

Wavetable playback of a normal sample

Very interesting sounds can be obtained if a normal sample is played back in wavetable mode - especially if human voice is recorded.
During normal sample playback the sample length depends upon pitch and the so-called Mickey Mouse effect occurs.

If the wavetable mode is used the sample length depends only upon the slope of the controlling voltage (e.g. sawtooth) but not upon the pitch. This is adjusted independently with the tune control and pitch CV.

Suggestions for sound experiments:

- If the slope of the voltage controlling the wavetable is running backwards (e.g. a falling sawtooth) sampled words seem to be spoken backwards (sort of).
- By selective scanning of a spoken sample one may obtain voice or vowel loops.
- Using a random or S&H voltage for controlling the wavetables leads to the basics of what is often referred to as granular synthesis.

For the above suggestions it is important that the period of the sampled sound fits almost exactly into the space allotted to each wavetable (256 Bytes). If the result is not satisfactory another record sampling frequency should be used until the desired sound is obtained.

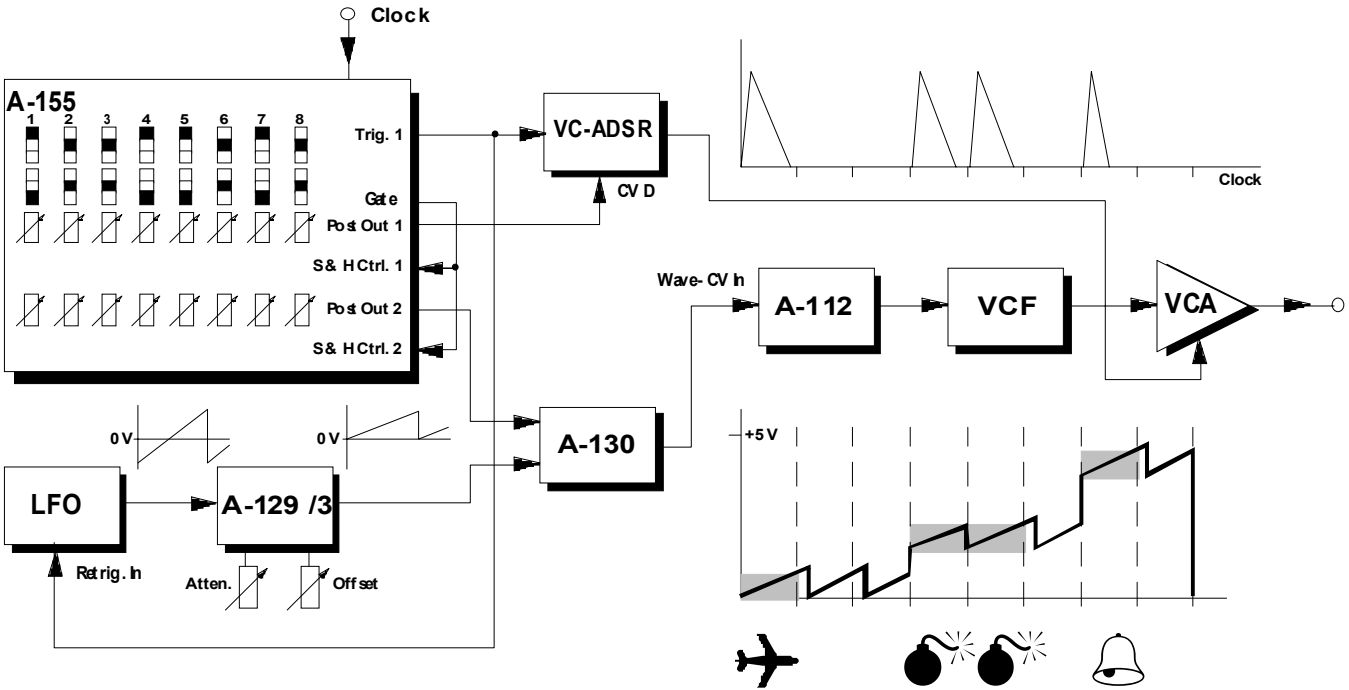

fig. 6: sequencer-controlled wavetable playback

6. A-112 Sample Dump Loader

The A-112 MIDI interface enables the transfer of sample and wave data from and to the device using MIDI SysEx strings. For that purpose a standard MIDI sequencer may be used.

In addition we include a 3 1/2“ floppy disk containing a **A-112 sample dump loader** software for PC.

Version 1.2 of this software (see fig. 7) enables bi-directional transfer between A-112 and the PC. Samples and waves can be organized and stored on the storage device (e.g. hard disk) of a PC. In the PC each sample or wave can be assigned any name (DOS convention, i.e. max. 8 characters) and stored as a **WAV file** (8 bit mono). The A-112 format is automatically converted into the WAV format.

Conversely, **any WAV file can be transferred to the A-112.** The program reads any WAV file in 8, 12 or 16 bit mono or stereo formats. Stereo WAV files are converted to mono before transfer to the A-112.

The WAV file format opens up a wide pool of sounds for use with the A-112. You may try out Windows system sounds or modifying sounds with a sample editor program and then re-loading back into to the A-112.

For the next version of the sample dump loader program we are planning to include the ability to generate sample dump MIDI files.

☞ The **latest version** of the sample dump loader can be found on our **internet homepage** (**http://www.doepfer.com**) for free download.

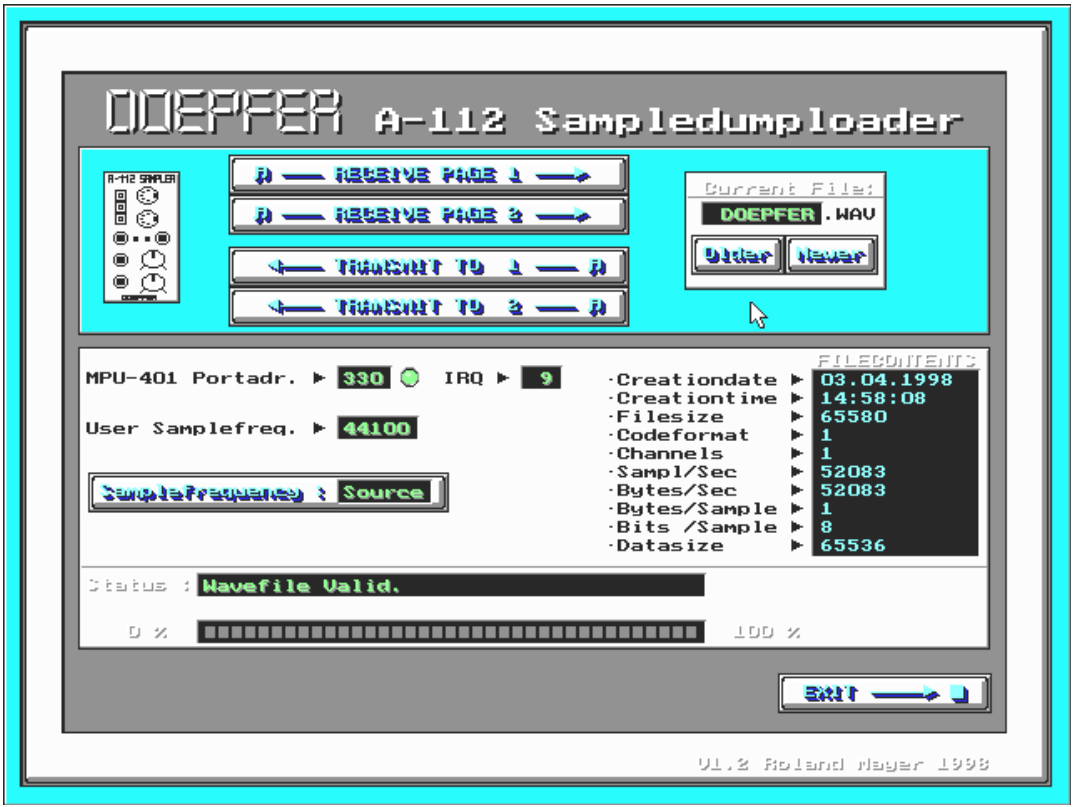

fig. 7: A-112 sample dump loader

7. Patch-Sheet

The following diagrams of the module can help you recall your own **Patches**. They're designed so that a complete 19" rack of modules will fit onto an A4 sheet of paper.

Photocopy this page, and cut out the pictures of this and your other modules. You can then stick them onto another piece of paper, and create a diagram of your own system.

Make multiple copies of your composite diagram, to use for remembering good patches and set-ups.



- Draw in patchleads with coloured pens
- Draw or write control settings in the little white circles

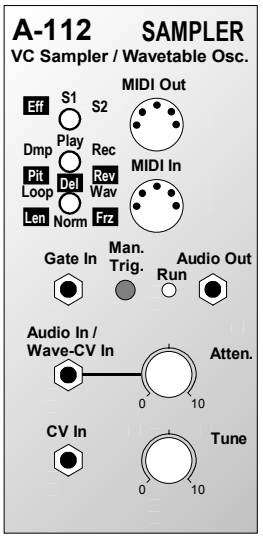

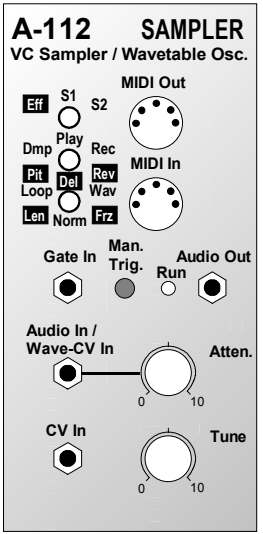

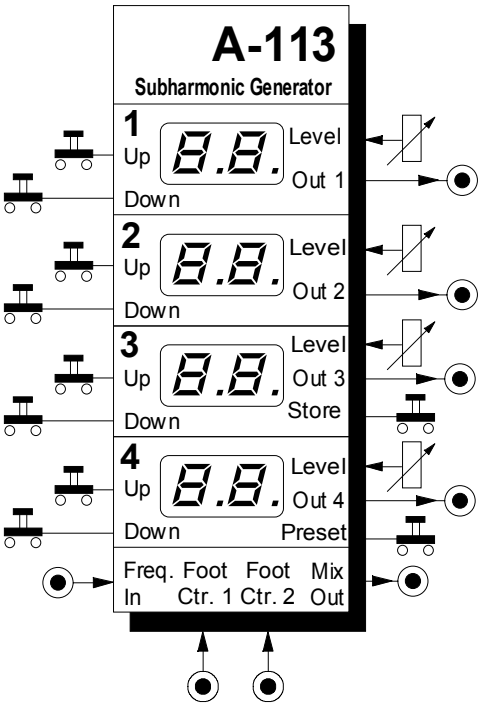

Attention ! The A-113 module requires an additional +5V power supply with 100mA (e.g. the separate +5V power supply or the +5V low-cost adapter)

1. Introduction

Module **A-113 (Subharmonic Generator)** is an additional sound source that derives four independend so-called ***Subharmonics*** from an incoming pulse signal. The module represents the sound generation core of the ***Mixtur-Trautonium*** introduced by **Oskar Sala** (ref. chapter 6).

Subharmonic means in this context a sawtooth wave whose frequency is derived from a master frequency. The master frequency is divided by an integer 1...24 to obtain the subharmonic. The subharmonics are available as **4 single outputs** as well as **mix output** with adjustable level for each subharmonic.

The integer **divisor** for each subharmonic is set with up/down buttons. The current divisors are displayed with four 2-digit LED displays.

The combination of 4 divisors is called **mixture**. 4 mixtures form a **preset**. 50 presets can be stored and called up within the module.

Two **gate inputs** are available to switch between the 4 mixtures within one preset (controlled by any gate signals, e.g. from foot controllers).

2. Basic principles

The Subharmonic Generator A-113 contains four times the following elements (see fig. 1)

- digital frequency divider (rectangle outputs) with 2-digit display and up/down buttons for divisor adjustment
- rectangle/sawtooth converter (with single output)
- attenuator controlling the amount (i.e. the amplitude) of the subharmonic in the mix output

The incoming signal (preferably the rectangle ouput of a VCO) is fed into the four frequency dividers. The frequencies of the rectangle signals generated by the frequency dividers are determined by the current divisors (1...24).

The rectangle outputs are converted to sawtooth waveforms by means of the rectangle/sawtooth converters.

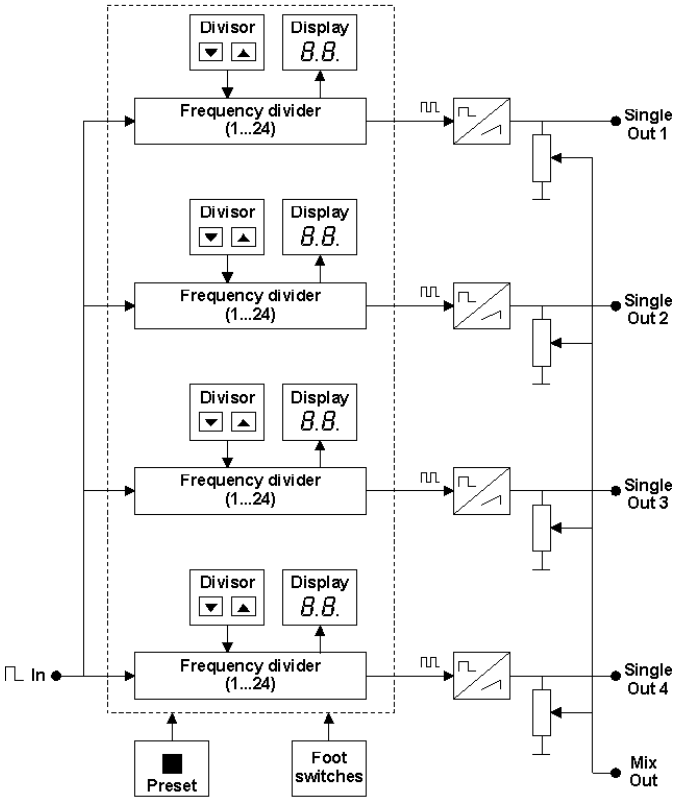

Fig. 1: Basic layout of the A-113

Subharmonics

The **subharmonics** result from **integer division of the frequency of the input signal**.

The table in fig. 2 shows the frequencies and corresponding tone pitches of the resulting subharmonics derived from an input signal with the tone pitch C ^{5} (i.e. 523,2 Hz).

Divisor	Freq. [Hz]	Note
1	523,2	C^{5}
2	261,6	C^{4}
3	174,6	F^{3}
4	130,8	C^{3}
5	103,8	As^{2}
6	87,3	F^{2}
7	73,4	D^{2}
8	65,4	C^{2}

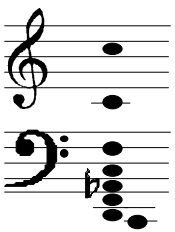

Fig. 2: *Subharmonics* of a signal with tone pitch C ^{5}

It becomes apparent that the subharmonics are equivalent to the tones of the **minor chord scale**.

By way of contrast the **harmonics** are equivalent to the tones of the **major chord scale**. Harmonics are integer multiples of the basic frequency (see fig. 3). The undertone series (i.e. subharmonics) are the mirror image of the overtone series (i.e. harmonics).

Factor	Freq. [Hz]	Note
1	65,4	C^{2}
2	130,8	C^{3}
3	196,0	G^{3}
4	261,6	C^{4}
5	329,6	E^{4}
6	392,0	G^{4}
7	466,1	B^{4}
8	523,2	C^{5}

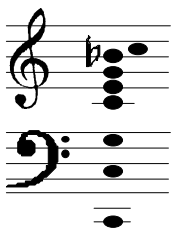

Fig. 3: *Harmonics* of a signal with tone pitch C ^{2}

☞ The term "subharmonic" is not quite correct as the A-113 outputs are sawtooth waveforms in contrast to the sine waves used in the harmonics theory. A sawtooth wave has a marked harmonic spectrum with odd and even overtones in contrast to the sine wave which is a “pure” wave without overtones. For details concerning harmonic contents of different waveforms please refer to the A-110 or A-111 manual (VCO´s).
We wanted to use the same terms as Oscar Sala in his *Mixtur Trautonium* and this is why we call the outputs of the A-113 *subharmonics* though they are sawtooth outputs.

Mixture

The combination of four subharmonics is called a **mixture**. **Four different mixtures** ("00", "01", "10" und "11") are available but only **one mixture** is **active** at a time. The original Mixtur-Trautonium had only three mixtures available but due to the binary structure of the A-113 we introduced 4 mixtures.

The active mixture is selected by the current state of the two **gate control inputs**. In the original Mixtur-Trautonium 2 foot switches mounted left and right of the volume foot controller are used to switch between the 3 mixtures.

Preset

A **preset** consists of 4 mixtures with 4 divisors each (see fig. 4). 50 presets can be stored and called up within the A-113 module. The original Mixtur-Trautonium had no presets available. Each mixture had to be changed manually.

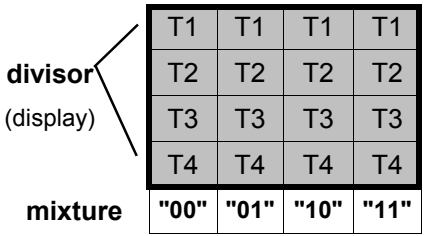

Fig. 4: Structure of a preset

2. Overview

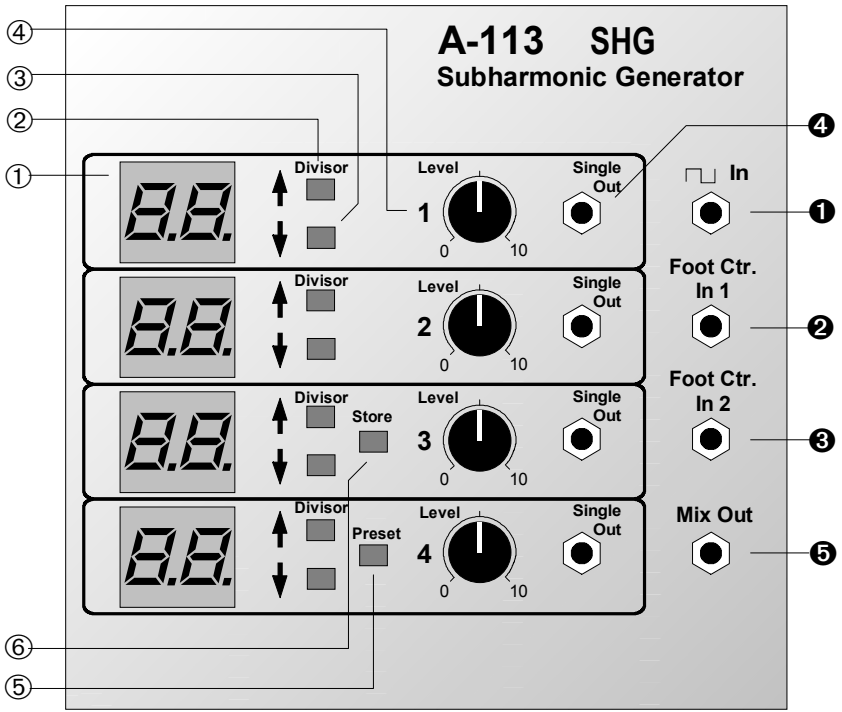

Controls:

①	**Display** :	displays the current divisor
②	**Up** :	button to increase the divisor data
③	**Down** :	same to decrease
④	**Level** :	output level control (mix output)
⑤	**Preset** :	preset selection button
⑥	**Store** :	preset store button

In / Outputs:

❶	**In** :	common audio input (rectangle input)
❷	**Foot Ctr. 1** :	gate input 1 to switch between the mixtures
❸	**Foot Ctr. 2** :	gate input 2 to switch between the mixtures
❺	**Mix Out** :	audio mix output
❹	**Single Out** :	audio single output

3. Controls

① Display

This is the 2-digit LED display that shows the **current value of the divisor**.

In addition the **decimal points** of the displays are used to display the **current mixture** (see fig. 5):

- **no** decimal point is on: **mixture "00"**
- **right** decimal points are on: **mixture "01"**
- **left** decimal points are on: **mixture "10"**
- **both** decimal points are on: **mixture "11"**

The mixture selected depends upon the states of the two gate inputs ❹ und ❺ (see chapter 4).

② Up • ③ Down

The Up button ② resp. the Down button ③ are used to adjust the **divisor** (range *01* to *24*) for the corresponding frequency divider.

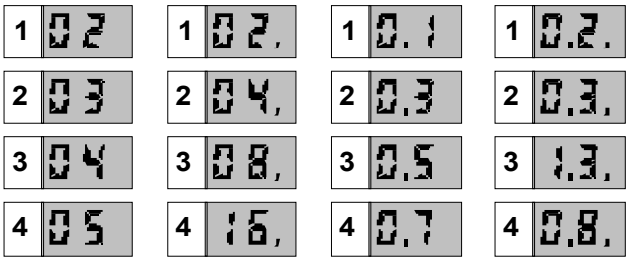

Fig. 5: Display of mixtures by means of decimal points (from left to right: "00", "01", "10", "11")

☞ Before you adjust the divisors be sure that you have selected the right mixture!

The **Up/Down** buttons of **frequency divider 4** are used for **preset selection** instead of divisor adjstment if the preset button ⑤ is operated simultaneously.

④ Level

The attenuators ④ control the **amount of the respective subharmonic** present at the mix output ❺.

⑤ Preset

While button ⑤ is operated one reaches the **preset mode** (see chapter 2 concerning the term *preset*). In this state the displays of the third and fourth frequency divider show "**Pr**" resp. the number of the preset currently selected (e.g. "**45**", see fig. 6a):

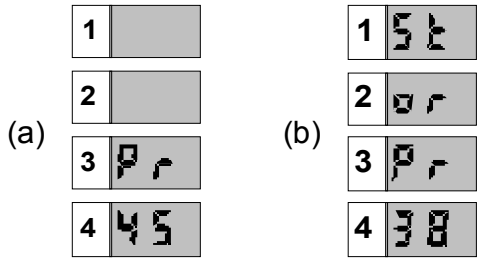

Fig. 6: (a): display of the current preset
(b): store preset with new preset number

To **select a new preset** the up/down buttons ② and ③ of the fourth frequency divider are used while the preset button ⑤ is operated until the desired preset number appears in the fourth display.
As soon as the preset button ⑤ is released the module returns to the normal mode. The displays show the divisors of the new preset and the divisors can be adjusted with the corresponding up/dow buttons.

⑥ Store

The store button ⑥ is used to **store presets**. The following steps are required to store a new preset:

- ❒ Operate the preset button ⑤ and keep this button pressed down (see fig. 6a).
- ❒ The up/down buttons ② and ③ are used to select the preset number in which the current preset will be stored (preset button ⑤ remains operated).
- ❒ Pressing the store button ⑥ (preset button ⑤ still remains operated) causes the storage of the current preset into the preset number selected. In the upper displays appears "**St**" and "**or**" as confirmation of the storage process (see fig. 6b).

☞ **Pay attention not to select a preset number that already contains preset data you may need in the future. Any former preset data in the selected preset number are deleted!**

As soon as both buttons preset ⑤ and store ⑥ are released the module returns to the normal mode. The displays show the divisors and the divisors can be adjusted with the corresponding up/dow buttons.

4. In / Outputs

❶ In

Socket ❶ is the subharmonic generator's audio input. Connect up the signal you wish to use as master frequency signal (normally the rectangle output of a VCO).

❷ Foot Ctr. In 1 • ❸ Foot Ctr. In 2

The gate inputs ❷ and ❸ are used to **select the mixture**. Any gate type signals may be used (e.g. Foot Controller, Sequencer gate outputs, MIDI interface) (see fig. 7).

Foot Ctr. In 1	Foot Ctr. In 2	Mixture	Display example
0	0	"00"	02
0	1	"01"	04.
1	0	"10"	0.1
1	1	"11"	1.3.

Fig. 7: Selecting mixtures with gate signals (0: gate = low or no gate signal applied, 1: gate = high)

The mixture is displayed with the decimal points (see chapter 3, fig. 5).

❹ Single Out

Sockets ❷ outputs the **single subharmonic** of the respective frequency divider. The attenuators ④ do not affect the level at these sockets.

❺ Mix Out

At output ❸ the mix of the 4 subharmonics adjusted with the 4 attenuators ④ is available.

5. User Examples

Simulation of a Mixtur-Trautonium

The **Trautonium** is an electronic musical instrument invented by Friedrich Trautwein in the thirties in Berlin, Germany, with enhancements made by Oskar Sala in the fifties which led to the well known Mixtur-Trautonium. The Trautonium can be divided into two logical sub-units: the control unit and the sound generation unit.

A detailed description of the **Mixtur-Trautonium** and the realization with the A-100 modular system can be found on our web site www.doepfer.com.

The replica of the Trautonium sound generation with the A-100 presents itself as the A-113 contains all the basic sound source elements of the Trautonium. The Trautonium Format Filter A-104 completes the sound generation as it is a copy of the lowpass/bandpass arrangement of the Mixtur Trautonium. Only a few A-100 standard modules (VCO, VCA, LFO, ADSR) have to be added to obtain the typical Trautonium sound.

Fig. 8 shows the schematic construction of the Trautonium sound generation using A-100 modules.

A-113 as a complex sound source

A-113 in combination with a VCO makes available a very complex and powerful sound source for a lot of sound experiments. The four subharmonics generated by the A-113 contain strong harmonic spectra with even and odd harmonics. They represent ideal basic sound sources to be modified with separate sound processing modules.

Fig. 9 shows an example. "XYZ" represents any sound processing combination of modules: e.g. VCF, VCA, Phaser, Distortion, Ring Modulator, Vocoder, Frequency Shifter, Spring Reverb and so on with controlling modules like ADSR, LFO, Random, S&H, Theremin, Light-controlled CV, Joy Stick, MIDI interface and so on. The controlling modules may be triggered or synchronized (e.g. with a keyboard or sequencer controlled gate) or free running.

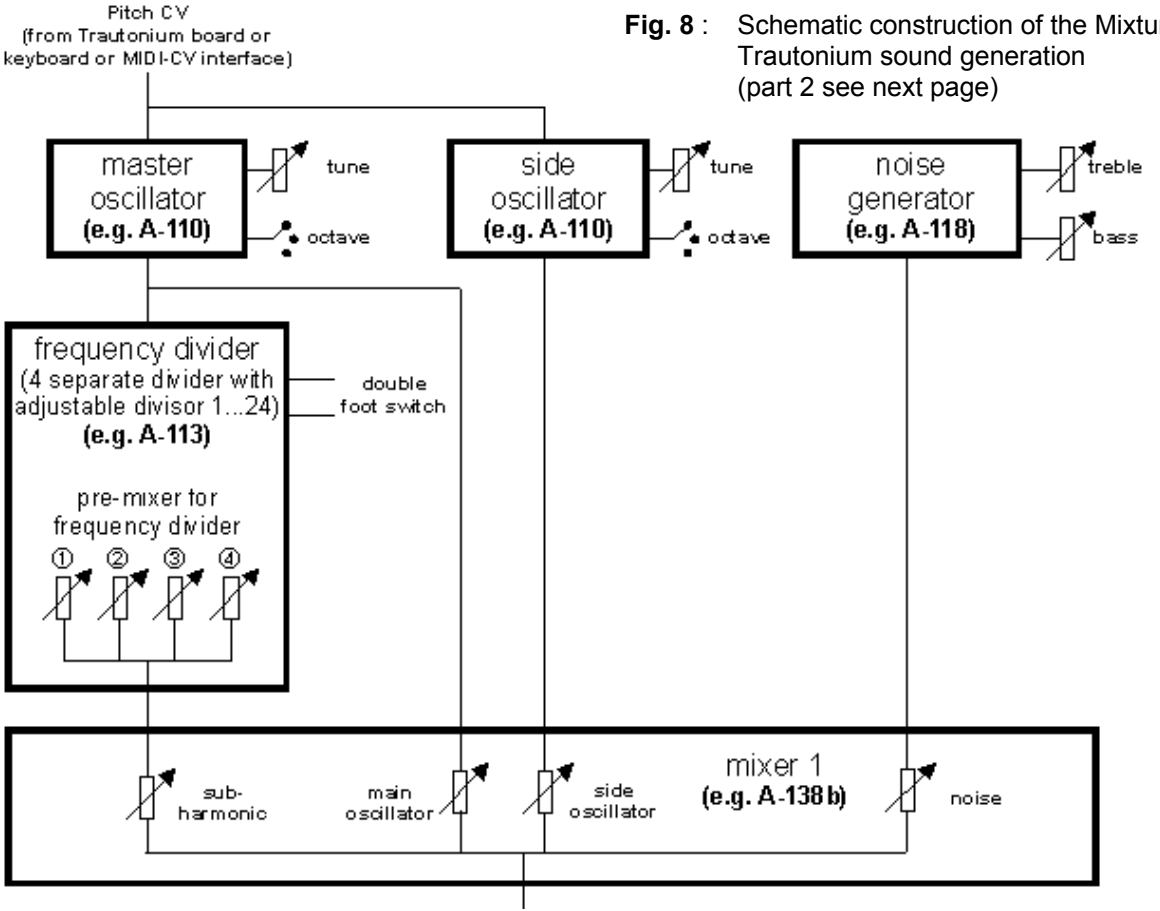

Fig. 8 : Schematic construction of the Mixtur-Trautonium sound generation
(part 2 see next page)

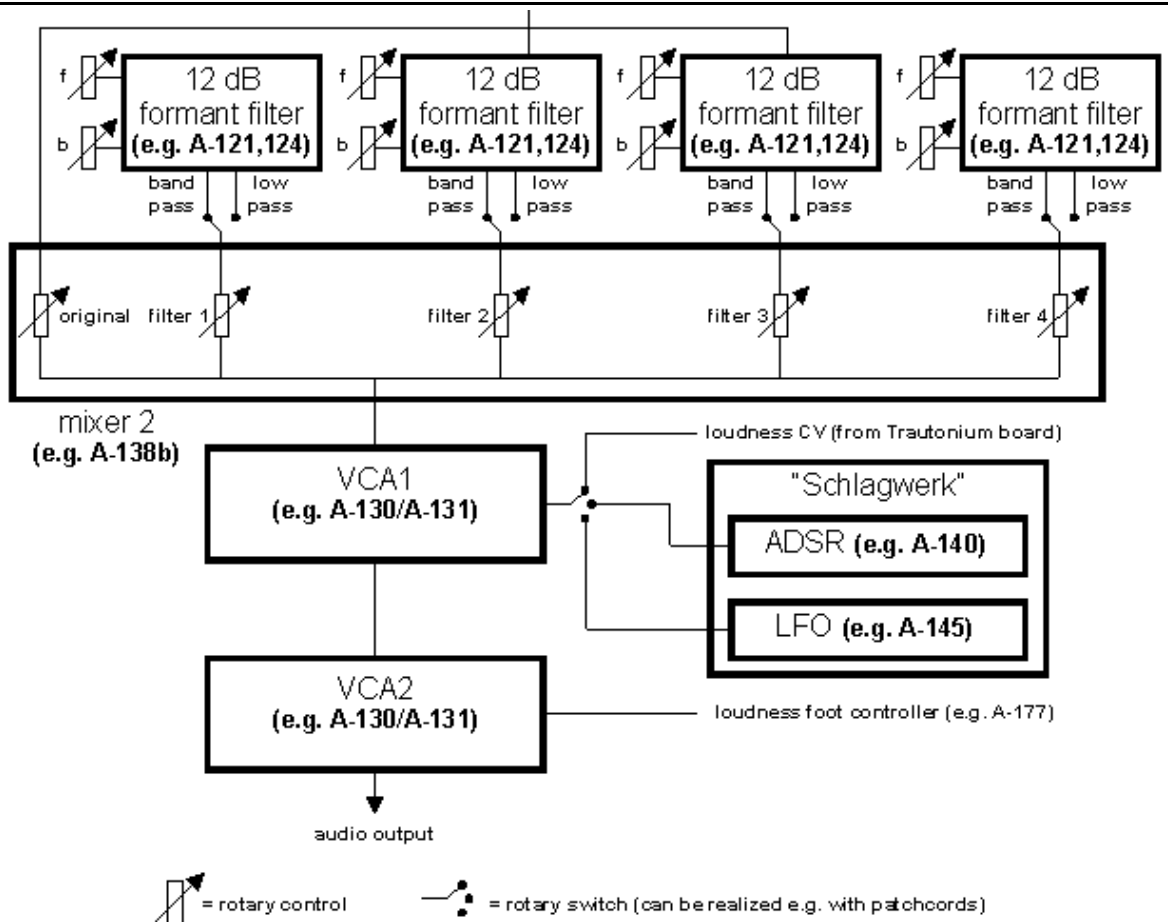
f
b
12 dB formant filter (e.g. A-121,124)
band pass
low pass
original
filter 1
filter 2
filter 3
filter 4
mixer 2 (e.g. A-138b)
VCA1 (e.g. A-130/A-131)
VCA2 (e.g. A-130/A-131)
loudness CV (from Trautonium board)
"Schlagwerk"
ADSR (e.g. A-140)
LFO (e.g. A-145)
loudness foot controller (e.g. A-177)
audio output
= rotary control
= rotary switch (can be realized e.g. with patchcords)

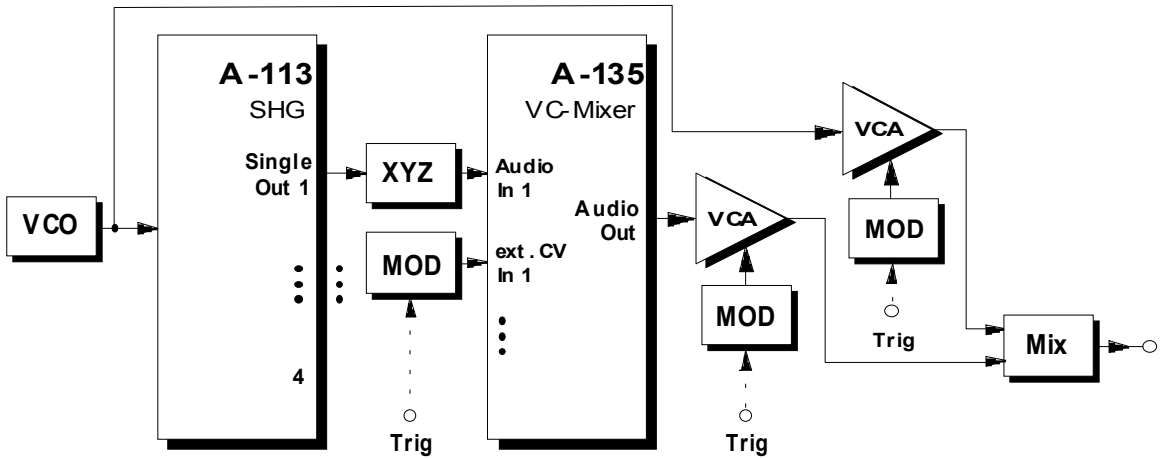

Fig. 9: A-113 as a complex sound source

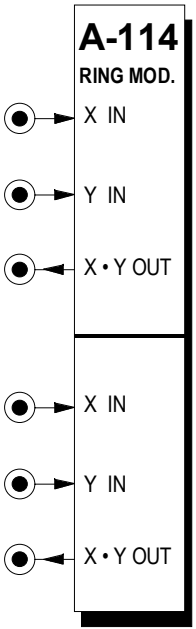

1. Introduction

Module **A-114 (Dual Ring Modulator)** contains two separate **ring modulators**.

A ring modulator outputs the product (Multiplication X • Y) of the signals at inputs X and Y. It's similar to a VCA, but whereas a VCA only responds to positive voltages at the inputs (2-quadrant multiplication), the ring modulator responds to both positive and negative voltages (4-quadrant multiplication).

The ring modulator thus provides a refinement of amplitude modulation (AM). Ordinary amplitude modulation will output the original carrier frequency f_C as well as the two side bands ($f_C - f_M$, $f_C + f_M$) for each of the spectral components of the carrier and modulation signals - but ring modulation cancels out the carrier frequencies, and just lets the side-bands pass to the output (see Fig. 1).

A ring modulator is used for the production of bell-like sounds, alien voices, or just to produce new timbres.

2. Dual Ring Modulator - Overview

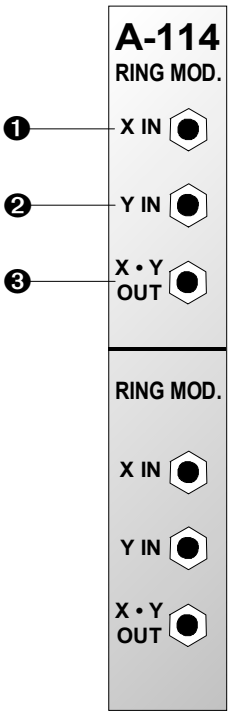

In / Outputs:

❶ **X In** : Signal input

❷ **Y In** : Signal input

❸ **X*Y Out** : Output

3. In / Outputs

❶ X In • ❷ Y In

Sockets ❶ and ❷ are the **signal inputs for the** A-114. Patch the signals you would like to ring modulate into these sockets.

The inputs need to have AC signals - so you should use audio signals, not control voltages. For control voltages, use a VCA.

❸ X*Y Out

Socket ❸ is the ring modulator **Output.**

4. User examples

Basic ring modulation

Fig. 1 shows a basic form of ring modulation using two sine waves. This patch can provide **bell-** and **vibes - like sounds.**

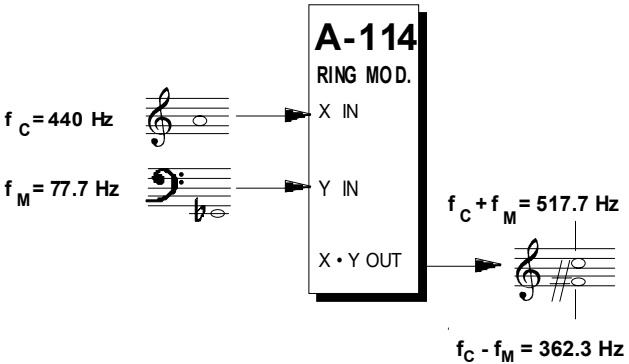

Fig. 1: Ring modulation with two sine waves

Ring modulation of audio signals

A ring modulator is very good at doing **weird things** to **audio signals** (for instance, voices, strings, sax).

The example at Fig. 2 shows an audio signal (input via module A-119 "Ext. In") ring modulated with a sine wave. The spectrum at the output contains the sum and difference of the frequency of the sine wave with *every single one* of the components of the audio signal's sound spectrum.

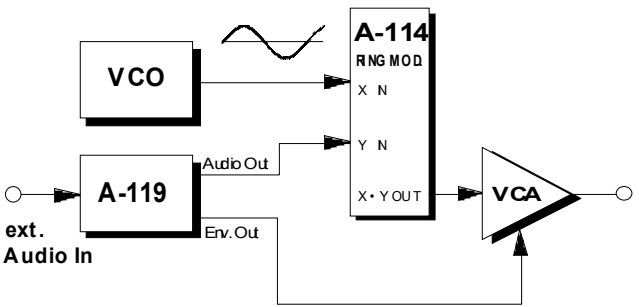

Fig. 2: Ring modulation of an external audio signal.

In this patch, the A-119 performs two functions.

On the one hand, it's bringing the level of the external signal up to the A-100's operating level (round about 5 V_{SS}).

On the other hand, it's also sending the envelope follower output (the envelope generated by the external audio signal) to a VCA. This is necessary because the ring modulator doesn't completely shut off when there's 0V input. The VCO is still just audible, at approximately -50 to -60dB, even when there's no external audio signal. The VCA gates it completely.

Experiment with this set-up, for instance by replacing the sine wave with other waveforms (eg. sawtooth, square wave, etc.)

The waveform you use can itself also be modulated (for instance by PWM, AM, FM, or audio signal).

“Glissando ring modulation”

The patch in Fig. 3. produces some interesting sounds. Input two VCOs set to an exact harmonic interval (eg. a fifth or octave) into the ring modulator. Send the pitch CV direct to the first VCO, but run the second oscillator’s CV through the upper section of the slew limiter (A-170) first.

Whenever the pitch CV changes, the ring modulation causes gradual changes in the sound spectrum.

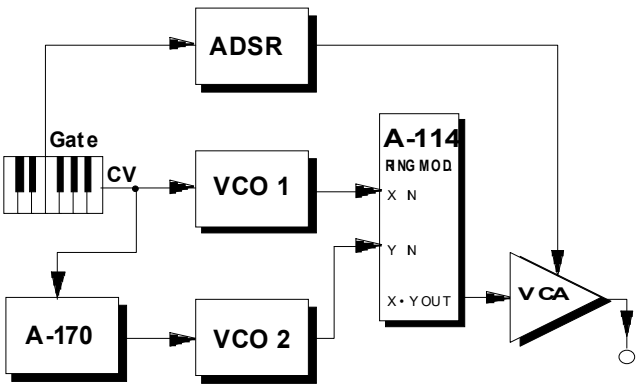

Fig. 3: “Glissando ring modulation”

☞ Use the **upper** part of the A-170 for this, because the diode offset in the lower part wlll put the VCO out of tune.

5. Patch-Sheet

The following diagrams of the module can help you recall your own **Patches**. They're designed so that a complete 19" rack of modules will fit onto an A4 sheet of paper.

Photocopy this page, and cut out the pictures of this and your other modules. You can then stick them onto another piece of paper, and create a diagram of your own system.

Make multiple copies of your composite diagram, and use them for remembering good patches and set-ups.



• Draw in patchleads with colored pens.

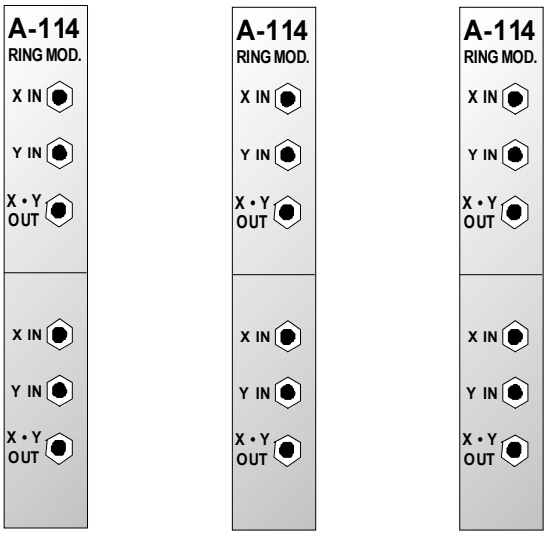



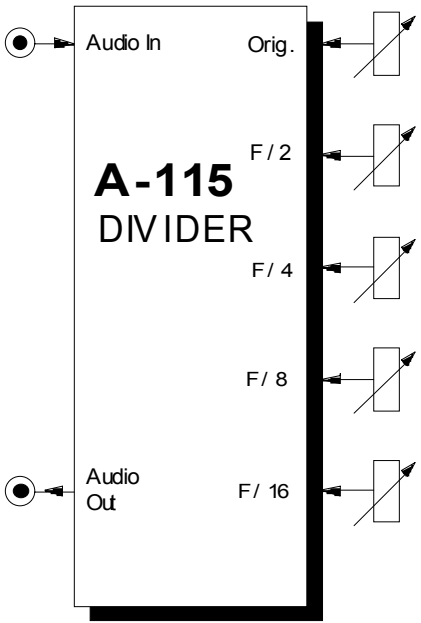

1. Introduction

Module **A-115 (DIVIDER)** is a four-way **frequency divider**.

The frequency of a signal at the input is halved (half frequency = first sub-octave), quartered (1/4 frequency = second sub-octave), and so on.

In this way, the DIVIDER produces **four sub-octaves** (F/2 down to F/16).

At the output, the A-115 produces a summed **mix** of the original and the four sub-octaves. There are attenuators to control the amount (ie. **Amplitude**) of the original signal and each of the sub-octaves.

Bear in mind that the sub-octaves output by the A-115 are all true square waves. If you put, eg., a sawtooth into the Divider, it changes it into a square wave before the frequency division takes place (using the Schmitt-Trigger system, if you're interested). At the output, therefore, there are always four square waves and the original signal available.

2. DIVIDER - Overview

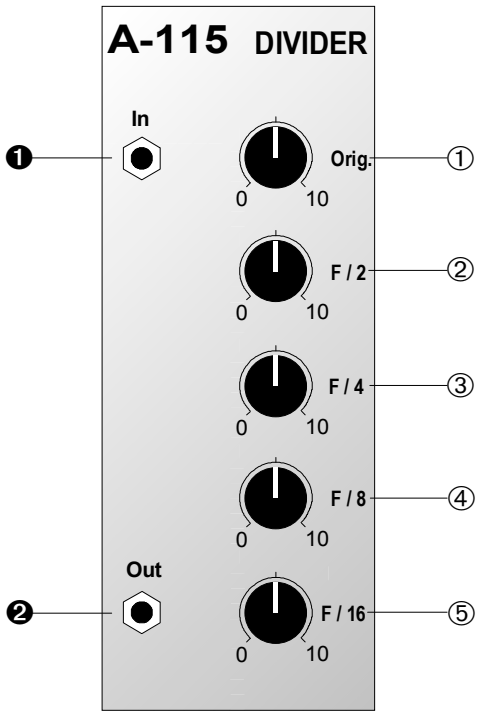

Controls:

① **Orig.** : Attenuator controlling the amount of the original input signal present at the mix output ❷

② **F / 2** : Attenuator controlling the amount of the first sub-octave present at the mix output ❷

③ **F / 4** : ditto for the second sub-octave

④ **F / 8** : ditto for the third sub-octave

⑤ **F / 16** : ditto for the fourth sub-octave

In / Outputs:

❶ **In** : Signal input

❷ **Out** : Mix signal output

3. Controls

① Orig.

This attenuator controls the **amount of the original input signal** present in the mix output.

② F / 2 ... ⑤ F / 16

These attenuators ② to ⑤ control the **amount of the respective sub-octaves** present in the mix output.
Say your production needs a stronger bass-line: you can add a square wave an octave below the original signal simply by setting attenuators ① and ② to maximum, and attenuators ③ to ⑤ to 0.

4. In / Outputs

❶ Audio In

Socket ❶ is the divider's **input**. Connect up the signal whose frequency you wish to divide.

☞ The divider is basically set up to divide rectangle waveforms. If you put another waveform into the input (for instance a sawtooth) the A-115 will change it into a square wave before dividing it.

❷ Audio Out

At **output ❷** the total mix of the original signal and four sub-octaves (depending on the position of attenuators ① to ⑤) is available.

5. User examples

A-115 as a "frequency generator"

With the A-115, you can start out with a VCO's basic square wave and produce more complex waveforms.

Fig. 1 shows how the A-115 can take a simple square wave and create a new wave form. Turn attenuators ① to ④ up to maximum, and set attenuator ⑤ to 0.

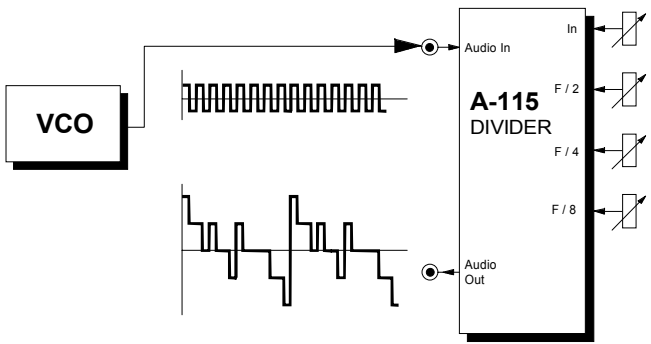

Fig. 1: The A-115 as a frequency generator

Experiment with different level settings for each attenuator, and also with other waveforms (for instance, a square wave modulated by a slow LFO).

Frequency division of external audio

The patch in Fig. 2 shows how the A-115 can frequency-divide an external monophonic signal (such as a vocal, flute, or single-note guitar).

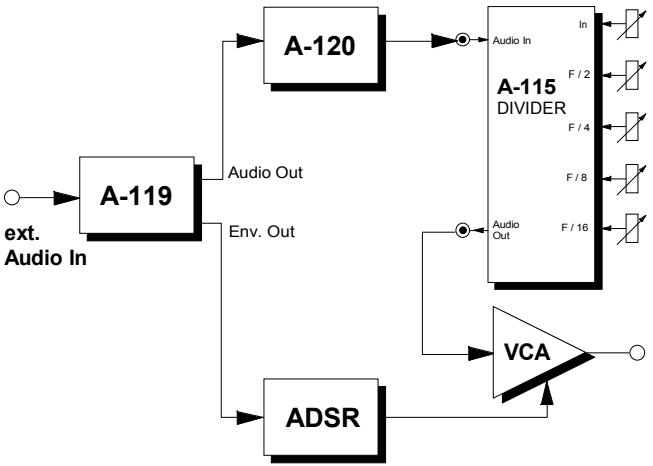

Fig. 2: Frequency division of external audio

The A-119 again has a double task: to bring the external signal up to the level the A-100 needs, so that the divider works properly, and to send voltages to an ADSR. That means that the **Threshold** control must be set relatively high, so that when the signal isn't gated, there's enough level for the divider to work correctly.

The ADSR controls a VCA, and closes it as soon as the gate shuts down, so that possible glitches (eg. when the sound of a string is dying away), are avoided.

☞ The ADSR's release parameter must be set to Zero.

If you like, you can patch an A-120 low pass filter (not voltage controlled) in before the A-115. This may improve the frequency division.

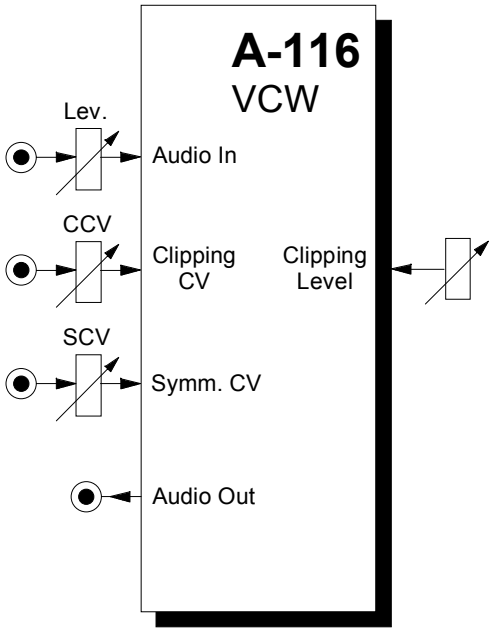

1. Introduction

Module **A-116 (Voltage Controlled Waveform Processor)** provides **voltage-controlled dynamic waveform modification** of audio signals. It can produce new waveforms from the standard VCO shapes, and **modulate these changes** in real time.

The signal first of all goes through an **input amplifier,** which can attenuate the signal as well as amplify it by up to a factor of 2.

After the input amplifier, the signal goes through **two parallel processors:** a **clipping circuit,** and an **asymmetrical amplifier**. The processed signals are **added together** and sent to the output.

Clipping-Level and **Symmetry** amounts are not just manually controllable, but can also be **modulated** by control voltages, to produce complex, constantly changing waveforms.

2. VC Waveform Processor - Overview

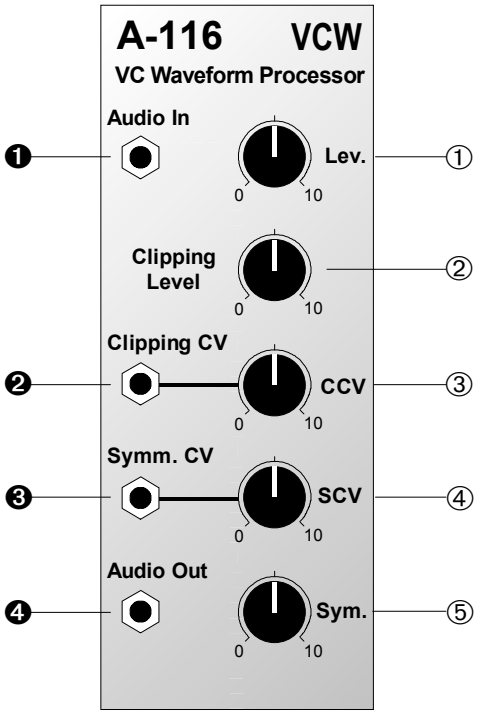

Controls:

①	**Lev.** :	Input ❶ amplifier level control
②	**Clipping Level** :	Clipping threshold control
③	**CCV** :	Clipping CV attenuator
④	**SCV** :	Symmetry CV attenuator
⑤	**Sym.** :	Symmetry control

In / Outputs:

❶	**Audio In** :	Signal input
❷	**Clipping CV** :	Clipping CV input
❸	**Symm. CV** :	Symmetry CV input
❹	**Audio Out** :	Signal output

3. Controls

① Lev.

The **input amplifier**'s gain can be set with attenuator ①. Since the gain amount is variable from 0 up to a factor of 2, you can attenuate as well as amplify input signals.

② Clipping Level

With control ②, you set the **clipping threshold** level in a range from -10 V to +10 V. Any part of a waveform which was **above** this threshold is clipped - that is, held at the threshold level (see Fig.1).

③ CCV

If you want to use a CV at input ❷ to control or modulate the clipping threshold, set the **clipping control voltage level** with Attenuator ③.

④ SCV

Symmetry can likewise be controlled or modulated by voltage control. Use attenuator ④ to control the **level of the symmetry control voltage** at input ❸.

⑤ Sym.

Symmetry, that is the g**ain factor of the internal symmetry VCAs**, is altered by control ⑤. The Symmetry VCA is a special amplifier which operates in the amplification range from -1 to +1, so can amplify negative as well as positive voltages (see Fig. 2).

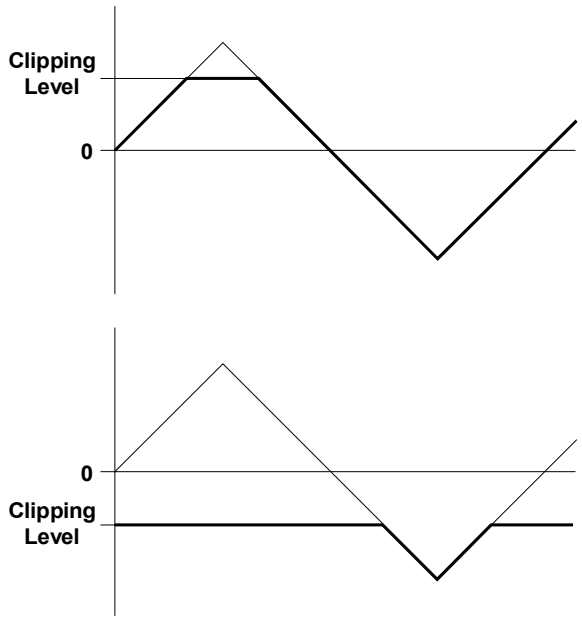

Fig. 1: how the clipping level works

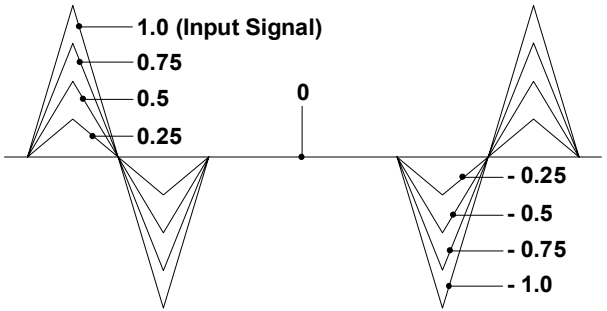

Fig. 2:In this example, a triangle wave is symmetrically amplified by the internal symmetry VCA, with various gain factors from 1.0 to -1.0

4. In / Outputs

❶ Audio In

Socket ❶ is the A-116 audio input.

❷ Clipping CV

The input to use for **voltage control** of the **clipping threshold.**

❸ Symm. CV

The input to use for **voltage control** of **symmetry**.

❹ Audio Out

Socket ❹ is the A-116 **output**.

5. User examples

The VC Waveform Processor A-116 is a very complex module, which, especially through the modulation of clipping level and symmetry parameters, can give any number of sometimes drastic waveform transformations. It's definitely worth systematically investigating all its possibilities. There follow a few suggestions, which may be helpful starting points.

- ❒ Begin with waveforms like sine and triangle waves, which have few overtones. Experiment with different combinations of symmetry and clipping level, and listen to the results.
- ❒ Fig. 4 shows an example of the different waveforms which emerge from clipping a triangle wave and putting it through different amounts of symmetrical amplification.
- ❒ Try modulating one parameter with an LFO while keeping the other constant. Experiment with different LFO waveforms and frequencies.
- ❒ Repeat this process with different settings for the second parameter.
- ❒ Try the same with the first parameter fixed, and the second modulated by an LFO.
- ❒ Modulate both the clipping level and symmetry at the same time. Try different combinations of modulation, such as

- LFO (sine wave) for Symmetry,
  LFO (square wave) for Clipping Level
- RANDOM for Clipping Level,
  Modulation wheel for Symmetry

etc.

❒ Try the same experiments with more complex (rich in harmonics) waveforms like a square wave, sawtooth, PWM, FM, or ring modulated sounds, or external audio, for the input signal. Listen to the results and take note.

❒ patch the original signal and the A-116's output into a mixer.

❒ Try using the waveforms generated by the A-116 to modulate other modules such as a VCF or VCA.

❒ Try using as an input the signal coming from a ring modulator or a synced VCO. You can also get interesting results by feeding the output of the A-116 into a ring modulator, or into the sync input socket of a VCO (see Fig. 3).

By experimenting in these and other ways, you'll soon realise what a powerful and endless source of dynamic wave form variations the A-116 is.

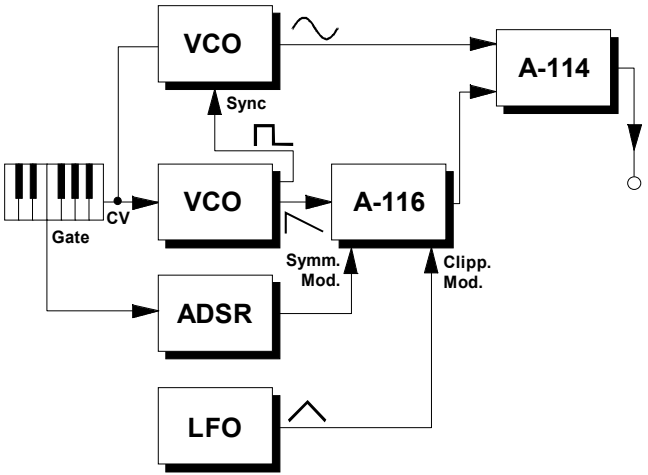

Fig. 3: The A-116 used in combination with a ring modulator and synced VCOs.

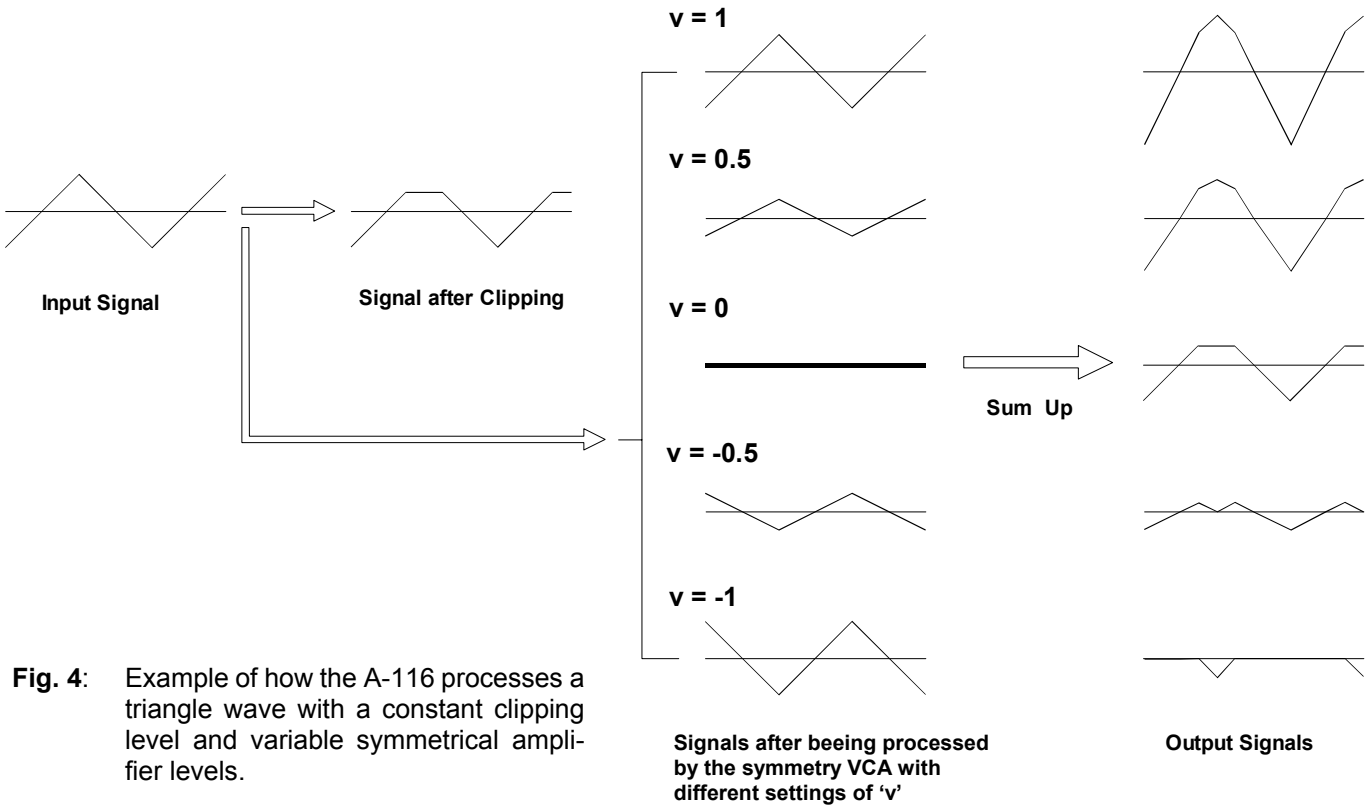

Fig. 4: Example of how the A-116 processes a triangle wave with a constant clipping level and variable symmetrical amplifier levels.

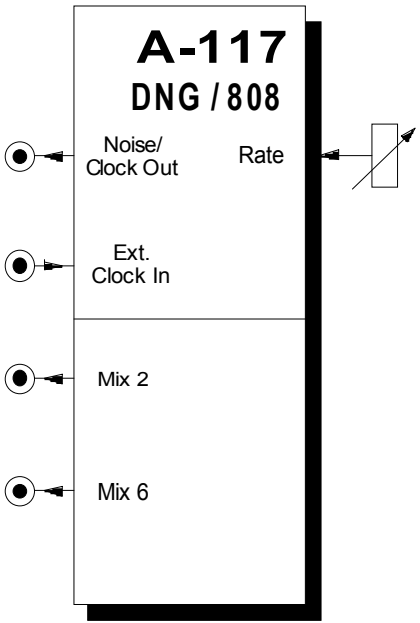

1. Introduction

Module **A-117 (DNG)** is a combination module, including a **digital noise generator** and an **808 source**.

The digital noise generator uses random sequences of square waves, (18-band, with multiple slewed feedback loops), whose rate can go from **random clicks** to **pure noise**. The colour of the noise is very different from the analog noise produced by the A-118.

In addition to a manual setting, the rate can be controlled by an external clock - eg. VCO, LFO or MIDI clock).

The 808 Source aims to re-create the sort of **multi-oscillator array** that was used in **Roland's TR-808** and **606** drum machines as the basis of the sound of the hi-hat, cymbals and cowbell. The **cowbell mix** uses two oscillators, and the **cymbals mix** six.

2. DNG / 808 - Overview

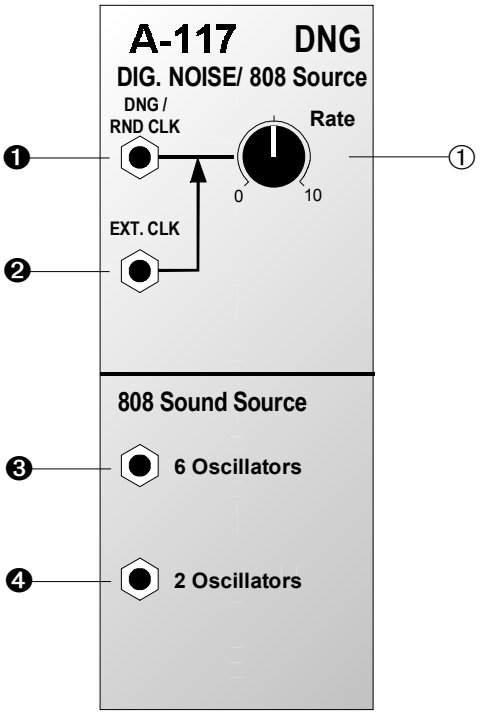

Controls:

① **Rate** : Pulse rate control for random clock / noise output ❶

In / Outputs:

❶ **DNG / RND CLK** : Output for random clock / digital noise

❷ **EXT. CLK** : Input for external clock signal

❸ **6 Osc.** : Output for 808 source (6 oscillators)

❹ **2 Osc.** : Output for 808 source (2 oscillators)

3. Controls

① Rate

This is used to adjust the pulse rate of the random clocks generated. At low pulse rates, individual pulses can be heard (see Fig.1, top), but with higher pulse rates (see Fig.1, bottom) the sound merges into **noise**.

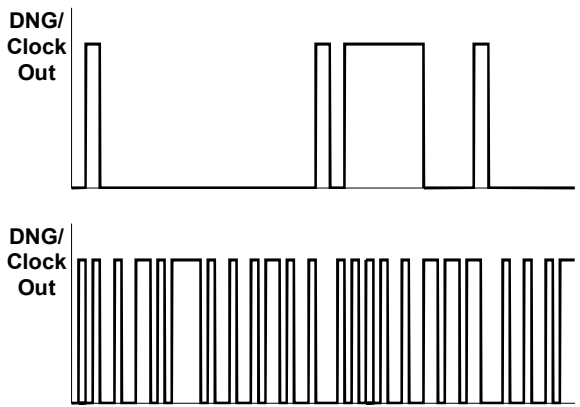

Fig. 1: A-117 output signals at different pulse rates

4. In / Outputs

❶ DNG / RND CLK

Output ❶ produces random clock pulses or digital noise, depending on the pulse rate set.

❷ EXT. CLK

Input ❷ is a **normalled** socket, so that the rate knob controls pulse rate, unless a signal is patched into this socket.

This external clock can be provided eg., by a square wave from a VCO or LFO, or from a MIDI clock, etc.. In this case, control ① has no effect. Pulse rate is then simply decided by the frequency of the external clock.

❸ 6 Oscillators

Output ❸ delivers a six-oscillator mix, like the raw material of the TR-808's cymbal sound.

❹ 2 Oscillators

Output ❹ delivers a two-oscillator mix, like the raw material of the cowbell sound on the Roland TR-808.

5. User examples

Module A-117 is an inexhaustible source of scraping, lip-smacking, bell or other untuned percussion sounds, so the following examples should be taken just as starting points for further experimentation.

Random clock pulses

With low pulse rate settings, the A-117's output ❶ is a source of randomly sequenced clicks or clocks. You can use these for modulating a variety of things - for instance the final ADSR in a patch, to produce sudden sharp peaks in the filter cut-off point.

Alternatively, you can use the clock pulses to **control** the **voltage controlled switches** A-150 and A-151, or the **clock divider / sequencer** A-160/161. Relevant patches can be found in the manual sections fo r the respective modules.

The patch in Fig. 2 shows another application, where the clock pulses are used with a filter for **sound creation**.

It uses the ability of a filter to 'ring': if you patch a pulse with a steep rising edge into a filter, it can set the filter into a brief burst of resonance. Depending on the filter type, different settings of the cut-off point and resonance amount can lengthen a click into bell-like sounds.

For example, if you use the 12dB band pass filter output on the A-121, with the cut-off set at around 5, and resonance set just below self-oscillation, you can create effective **dripping sounds**. A slow LFO (c. 5 Hz) modulating the filter cut-off point, makes each drip sound different.

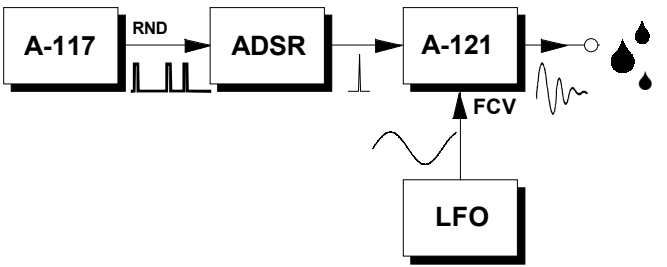

Fig. 2: random production of dripping sounds

Use the filter's resonance control to adjust the nature of the sound, from a drier, cracking / clicking type of sound (with little resonance) to a wetter, tinkly / bell-like sound (with the resonance set high, just below self-oscillation).

Change the band pass for a high pass filter, put the cut-off to high and the resonance to minimum, and summon up a hailstorm.

Experiment with different filter kinds, and settings for cut-off and resonance. You'll find all sorts of combinations of settings and filter types that produce well usable percussion sounds.

The A-117 as noise generator

At higher pulse rates, **digital noise** is available at output ❶. For example, you can add this unfiltered to other sounds. In Fig. 3, a patch for an 808-like bass drum sound uses a VCA, two ADSRs (one with a very short envelope) and a band-pass filter, to create a burst of bass energy. This standard bass drum sound benefits from filter ringing - see above.

Again, this basic patch will work well with other filter types, and cut-off and resonance settings, to produce different sounds like tom and snare drums.

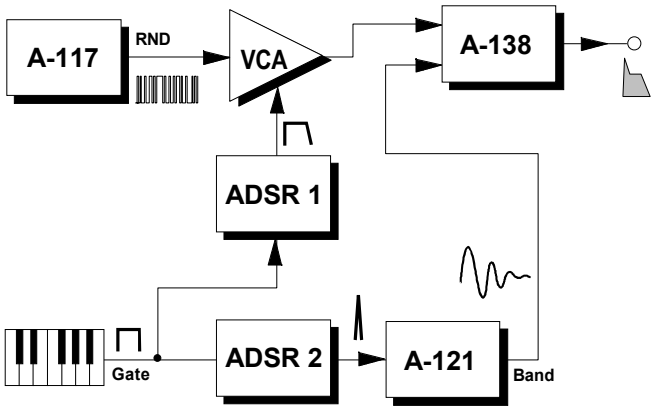

Fig. 3: Producing bass drum sounds

"Playable" noise

If you patch a VCO's square wave output into the external clock input, the frequency of the digital noise follows the pitch of the VCO, to produce a sort of pitched noise. Best for this is the High End VCO A-111, which has a greater usable frequency range than the standard VCO A-110.

"Octave noise"

Patch the digital noise into an A-115 **Audio Divider** and create **extra sub-octave bands** in the character of the noise.

The A-117's digital noise is an excellent sound source for the synthesis element in the A-129 vocoder.

Producing percussion sounds á la TR-808

To produce a sound like the TR-808's **cowbell**, use output ❹ (2 oscillators). Fig. 4 shows the relevant patch.

With that same patch, you can also produce **hi-hat** and **cymbal** sounds, using output ❸ (6 oscillators). IN this case, the filter cut-off point neds to be about 10 kHz.

Instead of the band pass filter, you can use a low pass filter for the cowbell sound, and a high pass filter will work for hi-hat and cymbal sounds.

Try other settings for filter cut-off and resonance, and other types of filter, to produce all sorts of different percussive sounds.

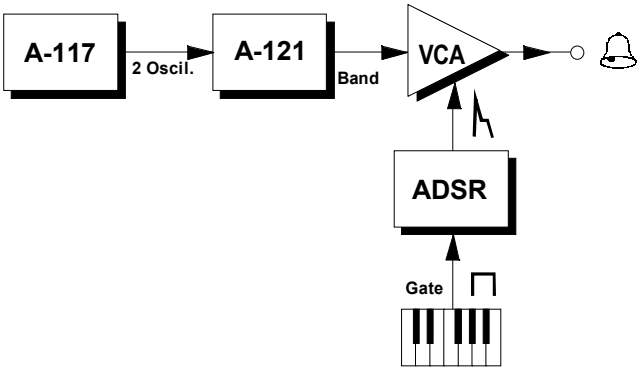

Fig. 4: producing a TR-808 cowbell sound.

Use **full range** digital noise as **source material** for **noises** and **percussive sound effects**, patching it into an A-128 fixed **filter bank** and VCA, which in turn is controlled by an ADSR. Experiment with all sorts of different combinations of filter bank settings.

Another thought: the 6 oscillator signal at output ❸ of the A-117 works very well as an excellent **sound source** for the synthesis section of the A-129 **vocoder (A-129/2).**

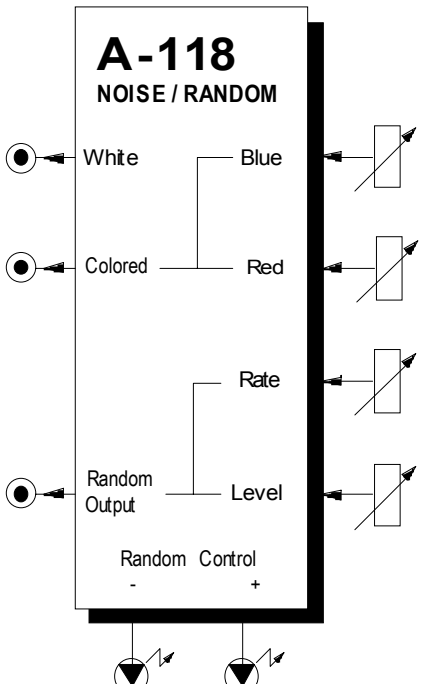

1. Introduction

Module **A-118 (NOISE / RANDOM)** is (as you might have guessed) a **noise and random voltage generator.**

It produces three types of signal: **white noise, colored noise,** and **random voltage.**

White and colored noise can be used as audio sources, and also, in conjunction with a sample & hold module, as control voltages, and the random voltage is a useful source of voltage control, especially for its low frequency content.

The A-118 gives you the ability to mix the relative amounts of **Red** (low frequency component) and **Blue** noise (high frequency component) in the colored noise output.

There are knobs to control the **rate of change** and **amplitude** of the random voltage, and two LEDs indicate the state of the voltage at any one time.

2. NOISE / RANDOM - Overview

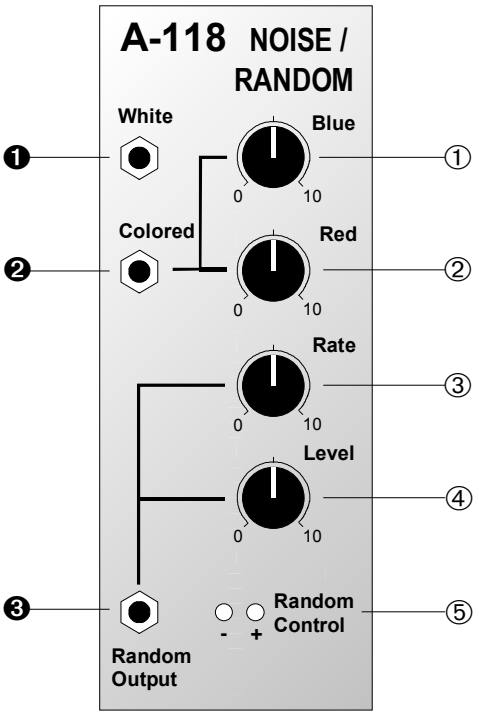

Controls:

① **Blue**: Control for blue noise component at colored noise output ❷

② **Red**: Control for red noise component at colored noise output ❷

③ **Rate**: Control for the cycle time of the random voltage at output ❸

④ **Level**: Control for the amplitude of the random voltage at output ❸

⑤ **Random Control**: LEDs indicating the state of the random voltage at output ❸

In / Outputs:

❶ **White**: White noise output

❷ **Colored**: Colored noise output

❸ **Random Output**: Random voltage output

3. Controls

The A-118 produces white and colored noise. **White noise** contains all audio frequencies, at random amplitude. The spectrum of white noise is completely flat - ie. each section of the sound spectrum contains the same amount of energy (see Fig. 1).

Another type of noise is **pink noise**. This also contains all audio frequencies, but with equal weighting for each octave rather than each frequency, so the higher frequencies get progressively quieter (see Fig. 1).

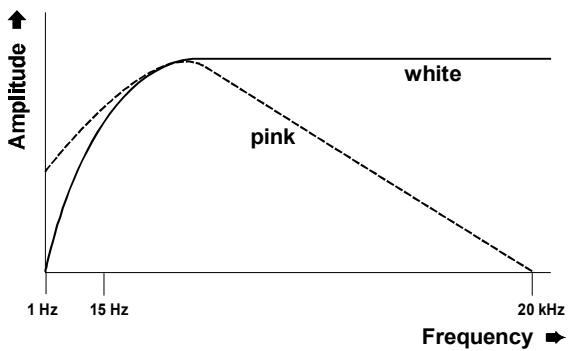

Fig. 1: Spectra of white and pink noise

① Blue

Use control ① to adjust the amount of **blue noise** (the **high frequency components**) in the signal at output ❷ .

② Red

Use control ② to adjust the amount of **red noise** (the **low frequency components**) in the signal at output ❷ .

③ Rate

Use control ③ to adjust the **cycle time T** of the random voltage at output ❸. T is a theoretical figure, because of the random voltages the module produces. In practice, a setting of 0 on the knob means fast changes in voltage, producing a spectrum similar to pink noise (see Fig. 2); and 10 means slow changes (see Fig. 3).

Remark: The random voltage is derived from the colored noise output by low pass filtering. Consequently the settings Blue and Red will affect the random output. If desired the random voltage can be derived from the white noise output. Please refer to the A-100 service manual or contact Doepfer if you want to modify your A-118.

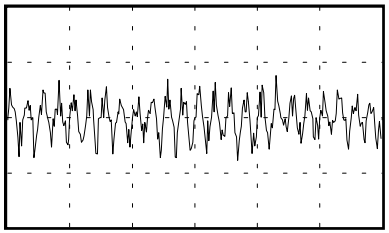

Fig. 2: Random voltage with **Rate = 0**

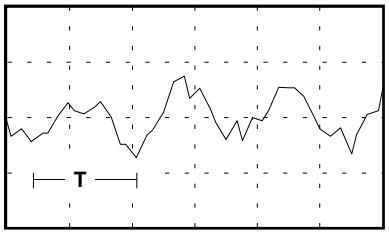

Fig. 3: Random voltage with **Rate = 10**

④ Level

The amplitude of the signal at output ❸ is adjusted with this control.

⑤ Random Control

Use these two LEDs to keep track of whether the **random voltage** is **positive** (+) or **negative** (-) at any point in time. Their relative brightness also shows amplitude.

4. Outputs

❶ White

Output ❶ produces **white noise**.

❷ Colored

Output ❷ produces **coloured noise,** whose spectrum is determined by the position of controls ① and ②.

❸ Random Output

Output ❸ produces a **random voltage**, whose rate of change and amplitude are determined by controls ③ and ④.

5. User examples

The A-118 as wind FX generator

- ❒ Patch the A-118 into an A-120 VCF as below. Set CV2 to zero, the frequency to a mid position, and the resonance to just below self-oscillation.
- ❒ Now increase CV2's level. An irregular wind sound should emerge. Knobs ③ and ④ on the A-118 control the rate of change and amount of this irregularity. ① and ② control the wind's timbral content.

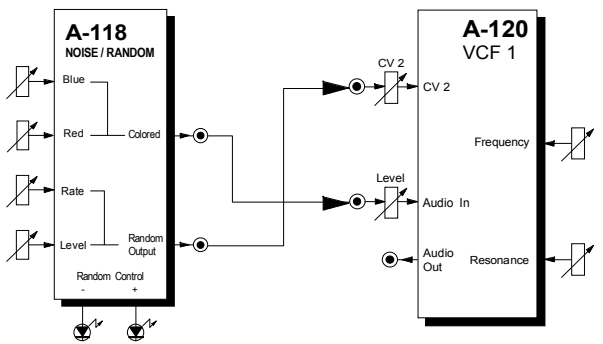

Fig. 4: Using the A-118 and A-120 for wind noises

Random arpeggios

In this example, momentary random voltages from the A-118's random output are captured by a **Sample & Hold Module** which is itself triggered by an LFO. Every time the LFO completes a cycle, a new random note is played by the VCO. It's possible to patch a VCA in before the VCO, and, by adjusting the gain and output parameters, control the frequency range of the arpeggios.

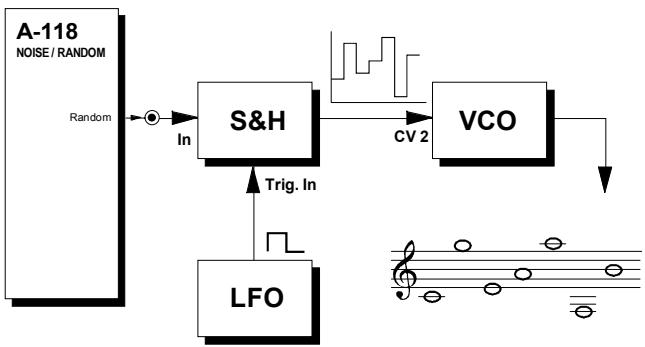

Fig. 5: Rhythmic random arpeggios

6. Patch-Sheet

The following diagrams of the module can help you recall your own **Patches**. They're designed so that a complete 19" rack of modules will fit onto an A4 sheet of paper.

Photocopy this page, and cut out the pictures of this and your other modules. You can then stick them onto another piece of paper, and create a diagram of your own system.

Make multiple copies of your composite diagram, and use them for remembering good patches and set-ups.

- Draw in patchleads with colored pens.
- Draw or write control settings in the little white circles.

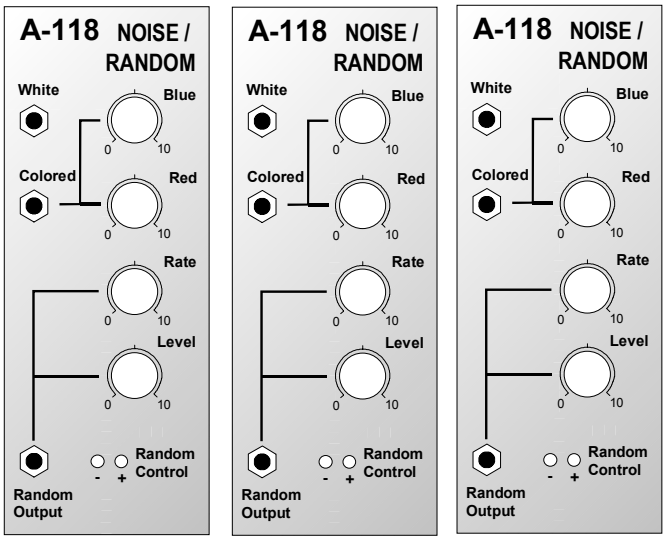

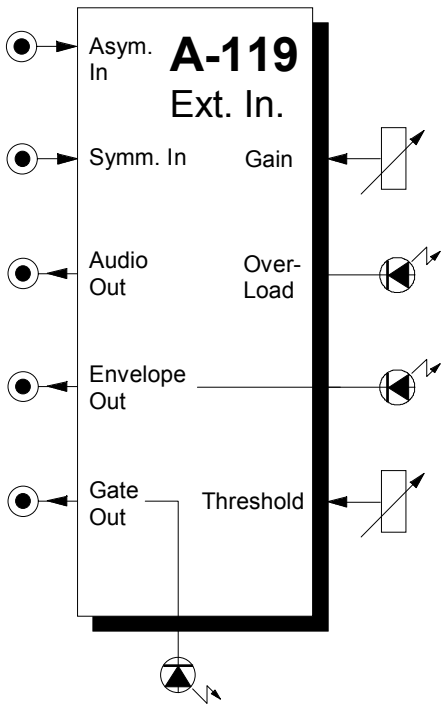

1. Introduction

Module **A-119 (External Input / Envelope Follower)** is designed to allow external audio signals to be integrated into the System A-100. It comprises a **pre-amp**, **envelope follower**, and **comparator**.

The pre-amp has two inputs: an **unbalanced input** for line level signals, with a gain factor of from 0 to 20, and a **balanced input** with a gain factor of from 0 to 500, for insertion of low level signals, for instance from a microphone or electric guitar.

The Envelope Follower reads the signal level of the input, and puts out a proportional voltage as an envelope at its own output (see chapter 3. How it works).

The comparator generates a gate signal whenever the input goes above an adjustable trigger threshold (see chapter 3. How it works).

Three LEDs help you keep track of overload, the envelope, and the gate signal.

2. A-119 - Overview

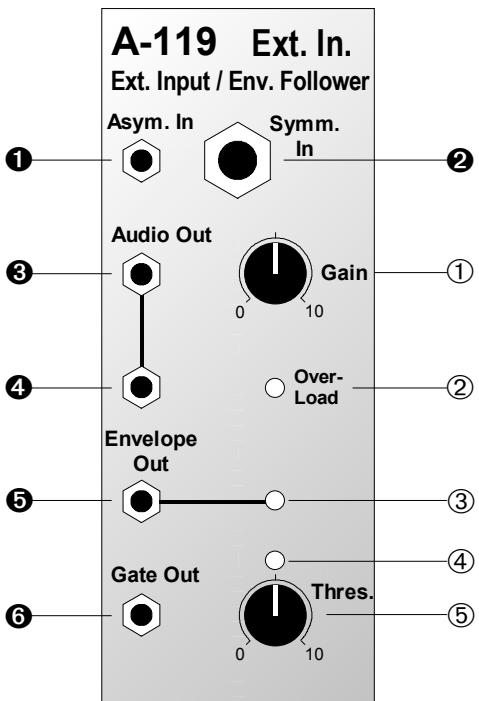

Controls and indicators:

① **Gain** : Control for input signal level

② **Over-Load** : LED overload warning

③ **LED** : Envelope level indicator at (output ❺)

④ **LED** : Gate indicator (output ❻)

⑤ **Thres.** : Trigger threshold control

In / Outputs:

❶ **Asym. In** : Unbalanced input for line-level audio

❷ **Symm. In** : Balanced input for mic or instrument-level signals (6.3 mm jack socket)

❸ **Audio Out** : Output for pre-amped audio signal

❹ **Audio Out** : ditto, linked with output ❸

❺ **Env. Out** : Envelope output

❻ **Gate Out** : Gate output

3. The Envelope Follower: how it works

The external audio signal (see Fig. 1a) is patched into input ❶ or ❷, depending on its level. It is amplified by an amount set by the gain control ①, brought up to A-100 internal operating level, and can then be output from audio outs ❸ and/or ❹.

To produce envelope and gate signals, the amplified signal is put through a full-wave rectifier, so that the internal signal output has only positive voltages (see Fig. 1b).

Next, the rectified signal passes through a 50 Hz low pass filter, and is sent to envelope output ❺.

☞ With input frequencies of less than 50 Hz, patch the envelope output ❺ into an A-170 slew limiter, set to a time constant of greater than 20 ms, to avoid remnants of the signal being audible in the envelope.

The signal at the envelope output is compared with the adjustable trigger threshold (**T** in Fig. 1c), to produce gate signals, available at output ❻.

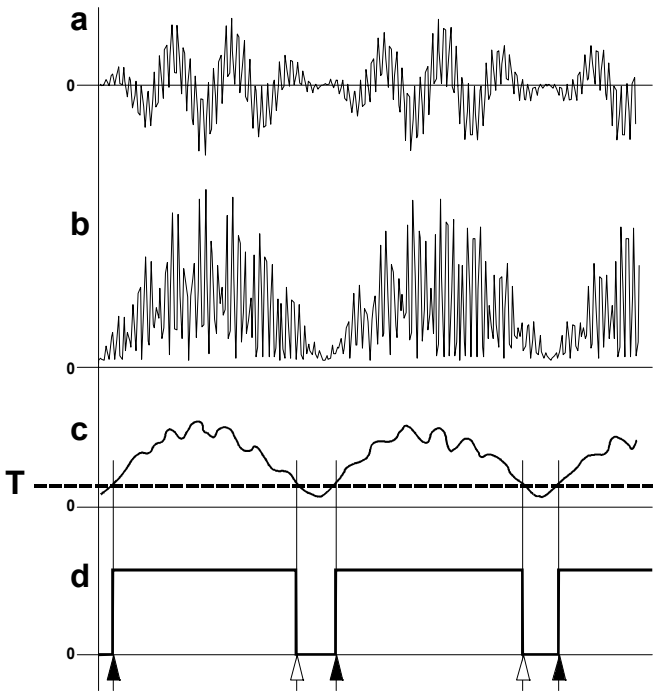

Fig. 1: The envelope follower: how it works

As soon as the envelope amplitude exceeds the trigger threshold T, the gate signal is output (see the black arrows in Fig. 1d on the previous page). When the signal drops below the threshold again, the gate signal stops (see the white arrows in Fig. 1d).

4. Controls and indicators

① Gain

This knob controls the **amount of amplification** the external signal receives. This depends on the input chosen:

- unbalanced input ❶ : 0 ... 20
- balanced input ❷ : 0 ... 500.

② Overload

LED ② lights when the circuit is overloaded - that is, when the amplified signal exceeds 10 V.

③ LED

The **voltage of the envelope** produced at output ❺ can be monitored with LED ③.

④ LED

LED ④ monitors the **gate signal** at output ❻.

⑤ Threshold

Control ⑤ is used to set the **trigger threshold T,** above which a gate signal is generated (see Fig. 1c).

5. In / Outputs

❶ Asym. In

The 3.5 mm mono mini-jack socket ❶ is the A-119's **unbalanced input**, designed predominantly for line level external audio signals and/or audio generated within the A-100 system.

❷ Symm. In

The 6.3 mm stereo full-size jack socket ❷ is the A-119's **balanced input,** for low level signals such as from a microphone, electric guitar, and so on.

☞ Because there's just one gain control for two inputs, only use one input at a time. If you use both at once, their signals will be mixed in a 1:25 ratio.

❸ Audio Out • ❹ Audio Out

The external audio signal, **amplified** by an amount set by the gain control, is available at audio output ❸ and/or ❹. These two sockets are simply linked as a “mini-multiple”.

❺ Env. Out

The **envelope** generated by the A-119 is available at this output ❺ (see Fig. 1c).

❻ Gate Out

The **gate signal** generated by the A-119 is available at this output (see Fig. 1d).

6. User examples

Manipulating external audio signals

The A-119 is what makes it possible for individual parts of the A-100 to manipulate external signals. In the patch in Fig. 2, an external audio signal is filtered by a VCF, whose cut-off frequency is controlled by an ADSR.

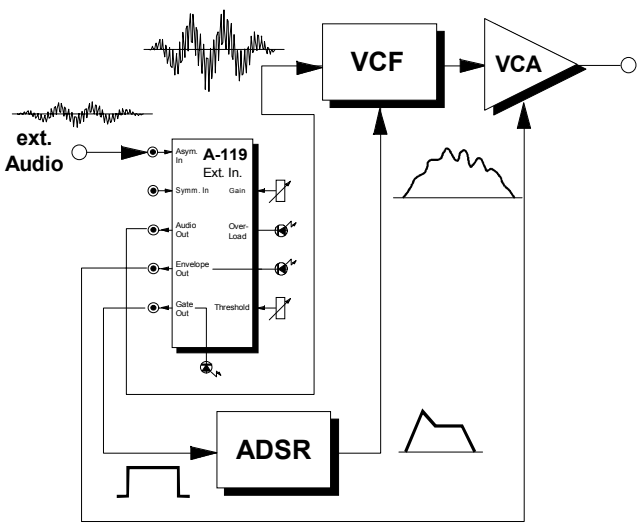

Fig. 2: Filtering an external audio signal

Ring modulator squelch patch

A ring modulator works particularly well with **external audio signals** such as voices, strings, or saxophone. In the patch in Fig. 3 a typical external audio signal is ring modulated with a sine wave.

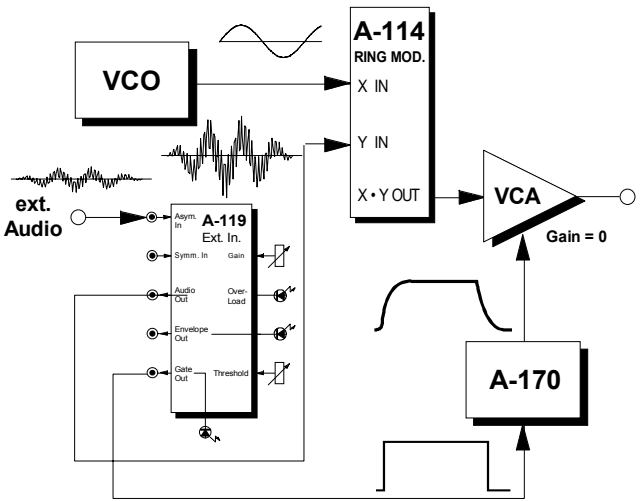

Fig. 3: Ring modulator squelch patch

In this patch, the A-119 has two functions. One is to bring the level of the signal output at ❸ and/or ❹ up to the operating level of the A-100 (c. 5 V). The other is to generate an envelope which can then control the ring modulator's output via a VCA.

This is necessary because the ring modulator doesn't shut down completely when there's a 0 V input. It goes to about -50 or -60 dB, and so traces of the VCO or external signal can still be heard.

The combination of the A-119 and VCA causes the ring modulator to shut down completely ('squelch') if there is no input present.

The A-170 slew limiter smooths out the gate signal generated by the A-119 a little, to avoid clicks in the VCA.

Instead of gate signals, you can use the envelope generated by the A-119 to control the VCA, and thus maintain the loudness pattern of the original sound.

“Ducking”, using an external signal

In the patch in Fig. 4 the amplitude of an external audio signal controls the loudness of an A-100 patch. Whenever an external audio signal is present, the internal A-100 sound is attenuated (set the gain of VCA 2 high).

Without the A-175 inverter, the opposite of this occurs (set the gain of VCA 2 to zero).

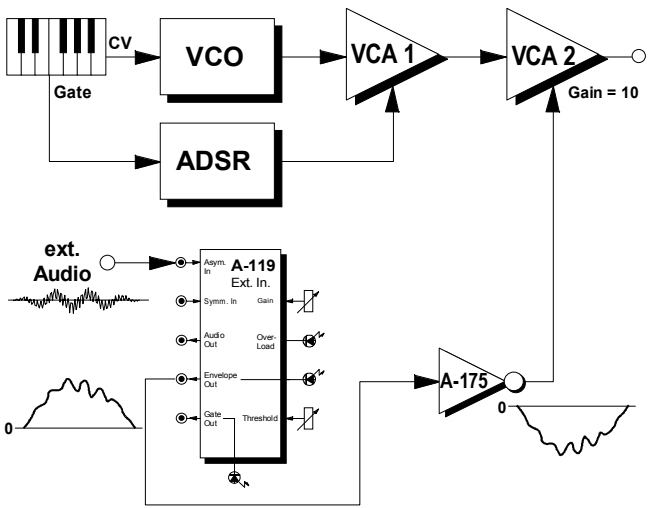

Fig. 4: “Ducking” by using an external signal

"Singing synth"

With the patch in Fig. 5, you can create a ‘singing synth’: when you sing into the microphone, out of the VCA comes a very interesting sound, distinctive but difficult to describe. Turn up the first and second sub-octaves on the A-115, and **turn the original ound right down**.

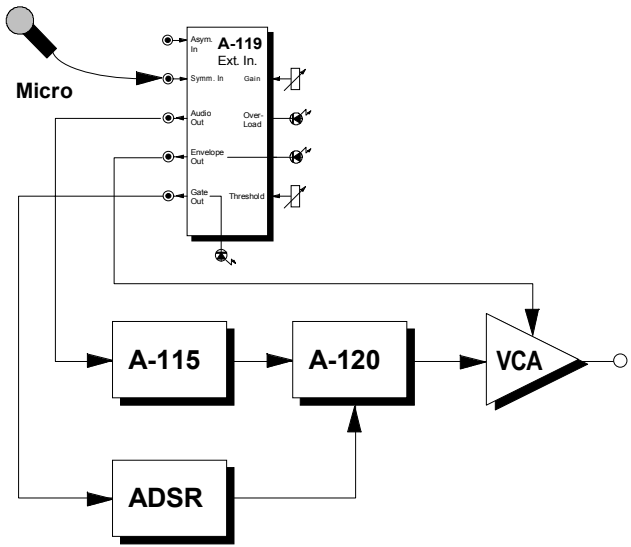

Fig. 5: "Singing synth"

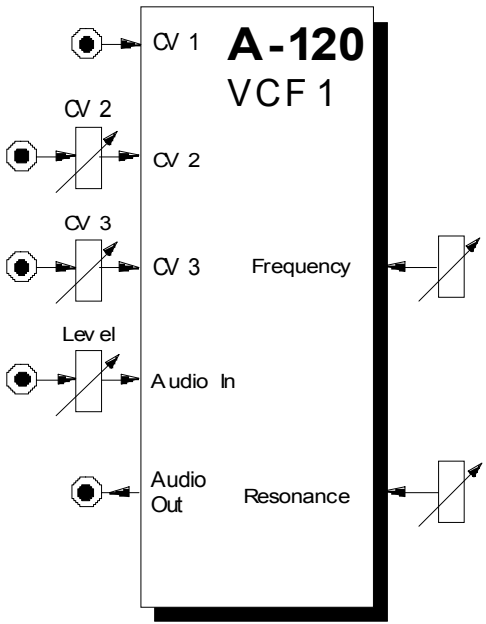

1. Introduction

Module **A-120 (VCF 1)** is a **voltage controlled low-pass filter**, which filters out the higher parts of the sound spectrum, and lets lower frequencies pass through.

The **Cut-Off Frequency** determines the point at which filtering takes effect. You can control this manually, or by voltage control (**filter modulation**, for instance by an LFO). Three CV inputs are available, and the sum of the voltages from these affects the filter cut-off.

VCF1 is a co-called "**transistor ladder**" design, with a cut-off slope of -24 dB/octave, as in various Moog synthesizers. That's what gives it its classic, legendary Moog sound.

Resonance (or Emphasis) is adjustable all the way up to self-oscillation - in which case the filter behaves like a sine wave oscillator.

2. VCF 1 - Overview

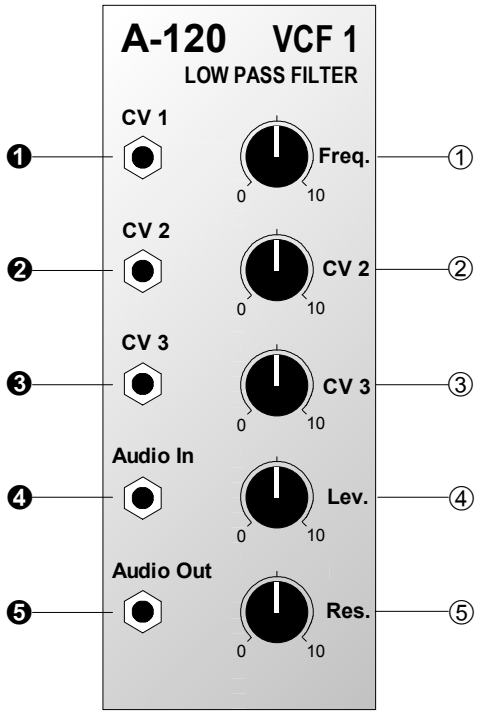

Controls:

①	**Freq.**:	Cut-off frequency control
②	**CV 2**:	Attenuator for CV at input ❷
③	**CV 3**:	Attenuator for CV at input ❸
④	**Lev.**:	Attenuator for audio input ❹
⑤	**Res.**:	Control for setting the filter's resonance (emphasis)

In / Outputs:

❶	**CV 1**:	Voltage control input
❷	**CV 2**:	ditto, level controlled by ②
❸	**CV 3**:	ditto, level controlled by ③
❹	**Audio In**:	Input to the filter
❺	**Audio Out**:	Output from the filter

3. Controls

① Freq.

With this control you adjust the **Cut-Off Frequency f_c**, above which the filter attenuates all frequencies. At 10, the filter is fully open. The more you turn down this control, the more the high frequencies are filtered. The sound becomes mellower and less bright (see Fig. 1) until at 0 the filter is completely shut, and there will be no output signal at all.

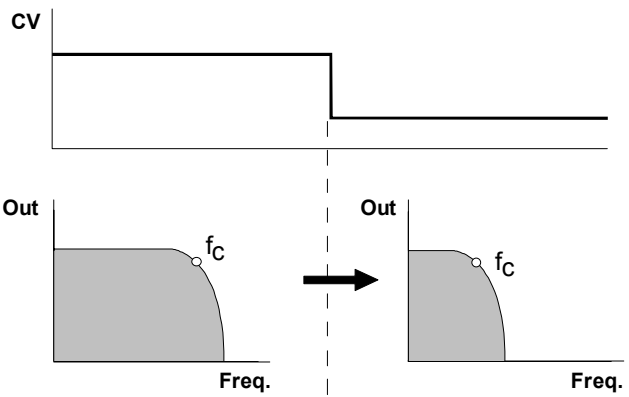

Fig. 1: White noise put through a low pass filter.

② CV 2 • ③ CV 3

For voltage control or modulation of the cut-off frequency, use these CV inputs ❷ and/or ❸ (see Fig. 1). Use attenuators ② and/or ③ to adjust the **control voltage level**.

④ Lev.

Use this attenuator to control the amount of signal entering the filter input ❹.

☞ If the filter's output distorts, turn this control down, unless you deliberately want the sound as a special effect.

⑤ Res.

With this control you adjust the filter's **resonance** (emphasis) - the parameter which emphasises the frequencies around the cut-off point f_C (see Fig. 2 on p.4).
Close to its maximum setting, the filter becomes so resonant that it goes into self-oscillation, and starts behaving like a **sine wave**. You can take advantage of this effect, and use the VCF as an additional oscillator.

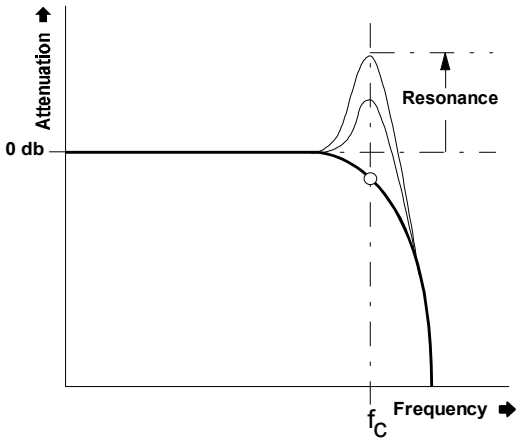

Fig. 2: How resonance affects the response of a low pass filter

4. In / Outputs

❶ CV 1

Socket CV 1 is the filter's standard **voltage control input**, and works on the 1V / octave rule, like the VCOs.

If you patch a modulation source (eg LFO, ADSR) to this input, the cut-off frequency of the filter will be modulated by its voltage: ie., the sound color changes according to the voltage put out by the modulator.

If you use the VCF as a sine wave oscillator, connect the pitch CV into this socket. Do the same if you want the filter's cut-off frequency to track exactly with the pitch of a note.

❷ CV 2 • ❸ CV 3

Sockets CV 2 and CV 3 are also **voltage control inputs for the filter.** Unlike CV 1, you can control the level of voltage - the intensity of modulation effect on the filter - with attenuators ② and ③.

❹ Audio In

This is the filter's **audio input** socket**.** Patch in the output from any sound source (eg. VCO, noise generator, mixer).

❺ Audio Out

Filter output ❺ sends out the filtered signal.

5. User examples

The filter's cut-off frequency can be modulated in various ways:

- **VCF - LFO**
  Modulation of the cut-off frequency produces cyclical changes of the **sound spectrum**. At low frequencies (c. 1 - 5 Hz), you get a **"Wah-Wah"-effect**. Modulation in the audio range produces interesting sounds; the same principles apply here as with frequency modulation of the A-110 VCO (see chapter 6).

- **VCF - ADSR**
  Modulation by an envelope results in gradual change of the **sound spectrum**. Typical uses would be the **synthesis of electric bass or drum sounds**, and **filter sweeps**, which slowly sweep through the audio spectrum, emphasising different harmonics.

- **VCF - Keyboard CV**
  This modulation produces pitch-related filter opening: the higher the pitch, the more the filter opens, and the brighter the sound becomes.

Producing wind FX with A-120 and A-118

❒ Patch coloured noise into the audio input, and random voltage CV into CV2. Set the filter CV to 0, cut-off to a middle value, and the resonance just below self-oscillation.

❒ Now turn CV 2 up. A whistling wind sound will occur. You can control the rate and amount of its irregularity with controls ③ and ④ on the A-118, and the tone colour with the A-118's controls ① and ②.

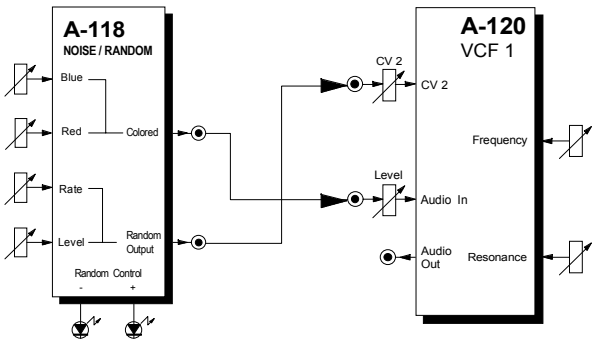

Fig. 3: Creating wind effects

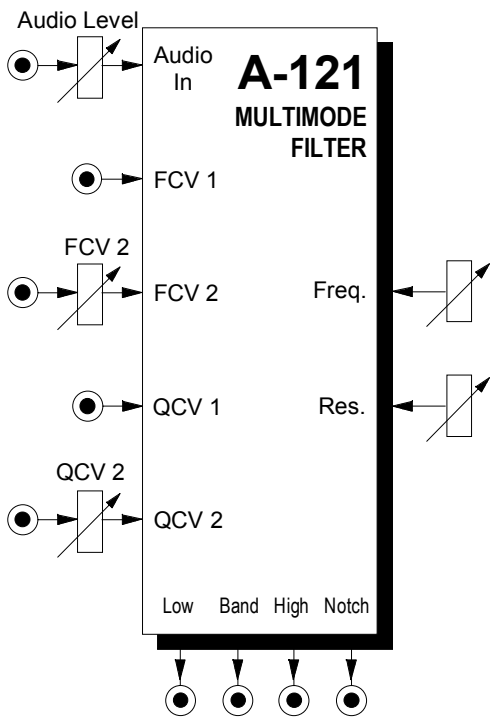

1. Introduction

Module **A-121 (VCF 2)** is a **voltage-controlled multi-mode filter** with a **cut-off slope** of **-12 dB / octave**.

Four simultaneous outputs are available, each with different characteristics: **low-pass**, **band-pass**, **high-pass** and **notch** (or band reject).

The **cut-off frequency** determines the point at which the respective filter effects appear. The frequency can be adjusted manually, or by voltage control (**Filter modulation**, for instance by an LFO or ADSR). Two CV inputs are available, whose control voltages are summed.

Resonance (Emphasis or **Q**) can be adjusted manually, or by voltage control (**voltage-controlled resonance / VCQ**), right up to self-oscillation, in which case it will behave like a sine wave oscillator.

2. VCF 2 - Overview

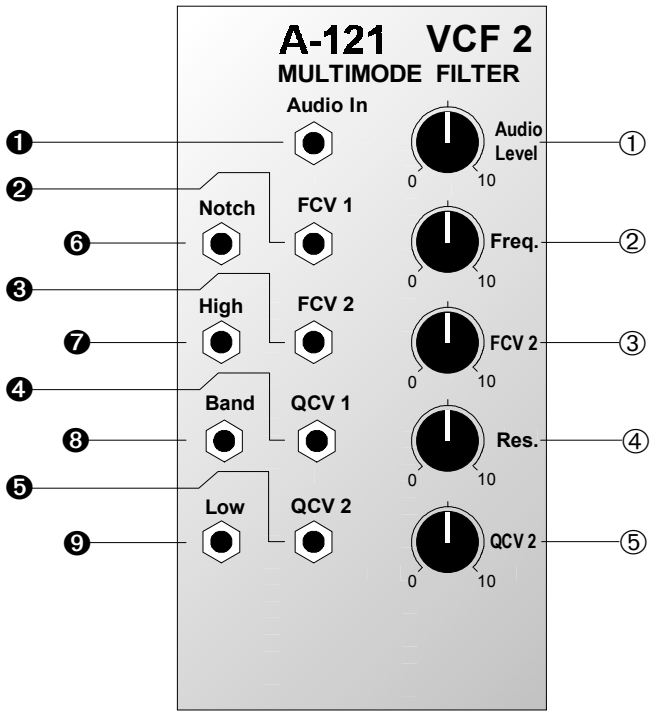

Controls:

① **Audio Level** : Input signal attenuator
② **Freq.** : Cut-off frequency control
③ **FCV 2** : Attenuator for filter CV ❸
④ **Res.** : Resonance control
⑤ **QCV 2** : Attenuator for resonance CV ❺

In / Outputs:

❶ **Audio In** : Audio input to the filter
❷ **FCV 1** : Cut-off frequency CV input
❸ **FCV 2** : ditto, level controlled by ③
❹ **QCV 1** : Resonance CV input
❺ **QCV 2** : ditto, level controlled by ⑤
❻ **Low** : Low-pass filter output
❼ **Band** : Band-pass filter output
❽ **High** : High-pass filter output
❾ **Notch** : Notch filter output

3. Basics

Low Pass

The most common type of filter in analogue sound production is the low-pass, which filters out the higher parts of the sound spectrum, and lets the lower frequencies pass unchanged. **Cut-off frequency f_C** determines the frequency at which this occurs (see Fig. 1).

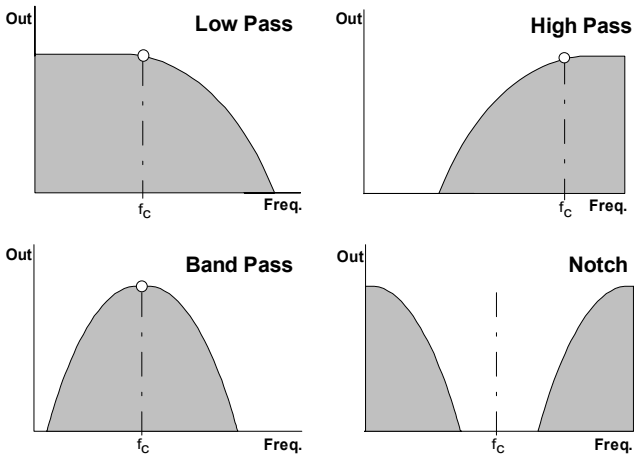

Fig. 1: Typical response curves of the four filters.

High Pass

The high-pass filter is a precise mirror-image of the low-pass filter: while it lets frequencies that are higher than the cut-off frequency f_C through, it attenuates frequencies below the cut-off point (see Fig. 1).

Band Pass

In a band-pass filter, both ends of the frequency spectrum are attenuated (see Fig. 1), and the cut-off frequency f_C becomes the **mid frequency.** It gives you the ability to highlight a particular frequency band.

Notch

A notch filter is the opposite of a band-pass filter, letting through the upper and lower end of the frequency spectrum, but rejecting a band in the middle (see Fig. 1). If the mid-frequency f_C is modulated by an LFO, the result sounds very similar to phasing.

Resonance

Another filter parameter is **resonance,** also known as emphasis or **Q**. As the value for Q gets higher, the frequencies around the cut-off frequency f_C are emphasised. Fig. 2 shows this process using a low-pass filter as an example (a high-pass filter would produce a mirror-image). This way, you can make the frequencies around the cut-off point stand out more.

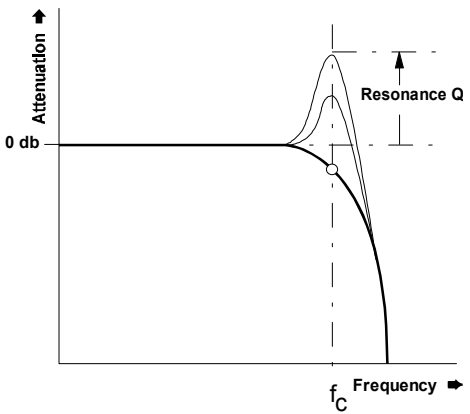

Fig. 2: How resonance affects the response of a filter around the cut-off frequency.

In band-pass mode, an increase in Q's value makes the bandwidth narrower.

The same is true of notch mode, but of course in this case this narrower band will be rejected, instead of let through.

Setting the resonance close to maximum sends the filter into self oscillation, and makes it behave like a sine wave oscillator.

☞ The A-121's resonance is not frequency dependent to any significant degree. As long as resonance is kept below the self-oscillation level, any variation is imperceptible. The one exception to this is at high levels of resonance, coupled with a high cut-off frequency setting, when an increase in resonance can lead to a small drop in the sine-wave output's frequency. This is a characteristic of the **CEM 3320 filter IC,** and is not due to a design fault in the A-121's control system.

4. Controls

① Audio Level

This attenuator controls the **input level** of the signal to be filtered, entering the module at input ❶ .

☞ If the filter's output signal is distorted, turn this control down, unless the distortion is wanted as a special effect.

② Freq.

The filter frequency is adjusted with this control.

③ FCV 2

If you want to control or modulate the cut-off frequency by a voltage patched into input ❸, use attenuator ③ **FCV 2** to set **the level of voltage control**.

④ Res.

With this control you adjust the **resonance** of the filter, which emphasises the frequencies around the cut-off frequency f_C.

Close to the maximum position, the filter goes into self-oscillation. In this mode it behaves like a sine wave oscillator, and can be used as an alternative sound source.

⑤ QCV 2

Attenuator ⑤ lets you control the **level of voltage control signal modulating the resonance** (Q).

5. In / Outputs

❶ Audio In

This socket is the filter's **audio input**. Patch the output of a sound source (such as a VCO, noise generator or mixer) into it.

❷ FCV 1

Socket FCV 1 is a **voltage control input for the filter frequency**. It works to the 1 V / octave standard (like a VCO).

If you patch a modulation source (eg LFO, ADSR) to this input, the cut-off frequency of the filter will be modulated by its voltage: ie., the sound color changes according to the voltage put out by the modulator.

If you use the VCF as a sine wave oscillator, connect the pitch CV into this socket. Do the same if you want the filter's cut-off frequency to track exactly with the pitch of a note.

❸ FCV 2

Socket FCV 2 is another **voltage control input for the filter.** Unlike CV 1, you can control the level of voltage - the intensity of the modulation effect on the filter - with attenuator ③.

❹ QCV 1

This socket is the **voltage control input** for the filter's **resonance**. It works to the 1 V / octave standard (like a VCO).

If you patch a modulation source (eg LFO, ADSR) to this input, the resonance of the filter will be modulated by its voltage: ie., the sound color of the frequencies around the cut-off point changes according to the voltage put out by the modulator.

❺ QCV 2

This is another **voltage control input for controlling the resonance**, but unlike QCV1 it gives you the ability to use Attenuator ⑤ to control the amount of voltage control, and therefore the intensity of its effect on the filter's resonance.

❻ Notch • ❼ High • ❽ Band • ❾ Low

Sockets ❻ to ❾ are the **filter outputs**. They simultaneously carry the input signal modified by the respective filter types (see Fig.1).

6. User examples

The A-121's cut-off frequency can be modulated in a variety of ways:

- **VCF - LFO**
  Modulation of the cut-off frequency produces cyclical changes of the **sound spectrum**. At low frequencies (c. 1 - 5 Hz), you get a **"Wah-Wah"-effect**. Modulation in the audio range produces interesting sounds; the same principles apply here as with frequency modulation of the A-110 VCO (see chapter 6).

- **VCF - ADSR**
  Modulation by an envelope results in gradual change of the **sound spectrum**. Typical uses would be the **synthesis of electric bass or drum sounds**, and **filter sweeps**, which slowly sweep through the audio spectrum, emphasising different harmonics.

- **VCF - Keyboard CV**
  This modulation produces pitch-related filter opening and closing.

Spatial manipulation of the spectrum

Fig. 3 shows an interesting application of the multimode filter. Each of the four outputs is fed to one corner of a quadraphonic sound stage (VCAs and amplifiers, etc. have been omitted for the sake of clarity).

Each channel sends out only a part of the audio spectrum, depending on its respective filter's frequency response, and the result is interesting spatial distribution of the different spectral elements of the sound.

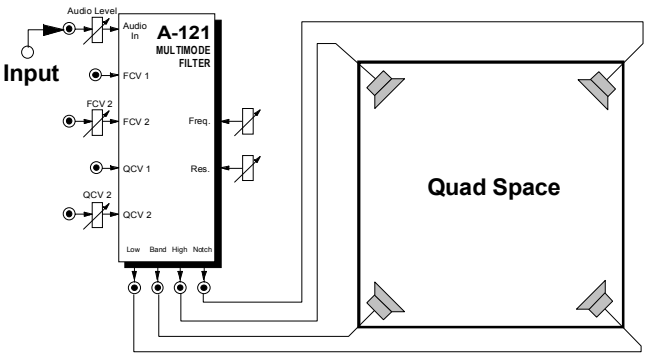

Fig. 3: spatial manipulation of the spectrum

Generating vocal effects

With the patch in Fig. 4 (see next page) vocal effects can be produced, using two A-121 filters.

A sawtooth at around 100 Hz or less is patched into two A-121 filters. Set Q to a small or medium level, and use different mid-frequencies for each of the two filters.

Modulate the VCO and both filters with a triangle wave LFO at about 1 Hz, but with the voltage input to one of the filters inverted by an A-175 inverter. Set the modulation amount for the VCO (Attenuator CV3) and for the filter (Attenuator FCV2) to a small or medium value.

You can control the intensity of the modulation with a dynamic MIDI controller - aftertouch, mod wheel, etc..

Experiment a little with this patch (see next page). With careful setting up and tweaking, interesting vocal-like timbres can be produced.

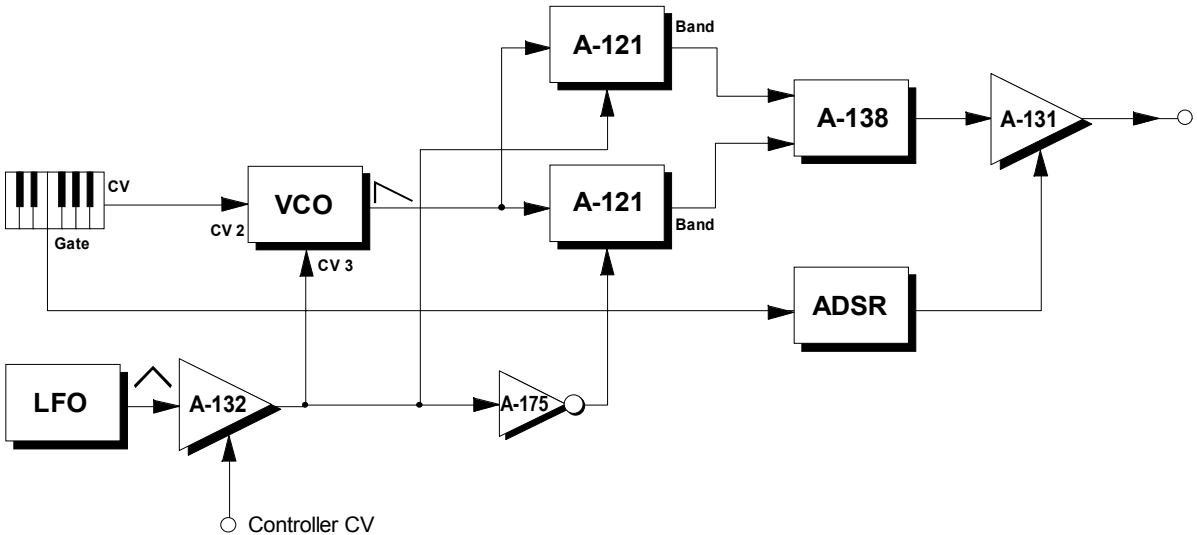

Fig. 4: Producing vocal-like sounds

Check out various different combinations of mid-frequency settings on the filters.

Experiment with different envelope settings.

By turning down the pitch CV input to the VCO, more speech-like intonation can be achieved.

Patch a Slew Limiter (A-170) in before the VCO's CV input, so that the 'voice' intonation slides, rather than jumping in discrete steps.

7. Patch-Sheet

The following diagrams of the module can help you recall your own **Patches**. They're designed so that a complete 19" rack of modules will fit onto an A4 sheet of paper.

Photocopy this page, and cut out the pictures of this and your other modules. You can then stick them onto another piece of paper, and create a diagram of your own system.

Make multiple copies of your composite diagram, and use them for remembering good patches and set-ups.

- Draw in patchleads with colored pens.
- Draw or write control settings in the little white circles.

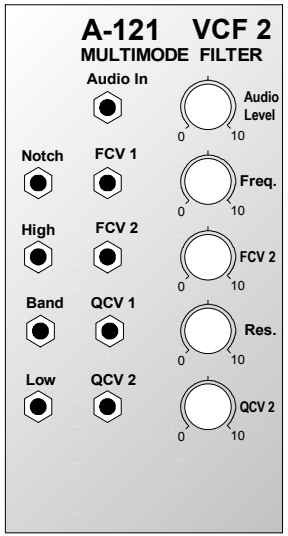

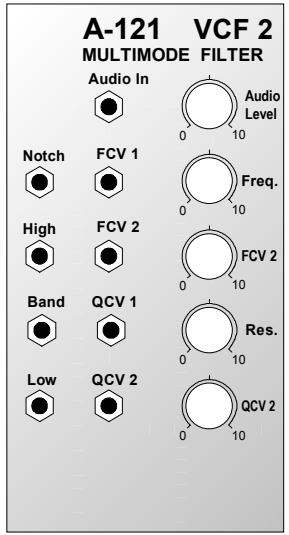

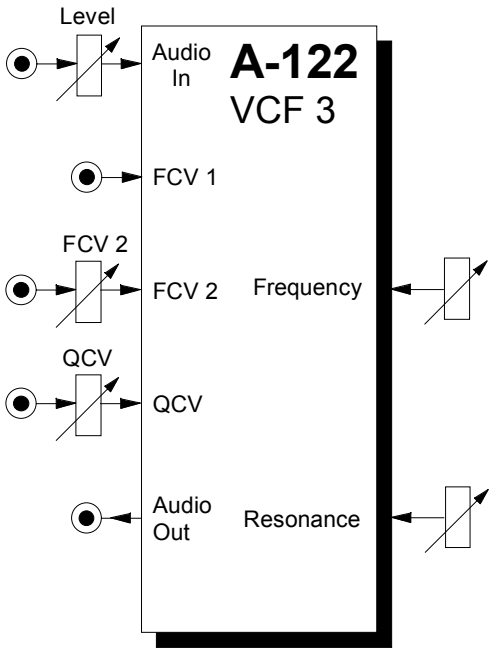

1. Introduction

The modules **A-105** and **A-122** are **voltage-controlled low-pass filters**, which filter out the higher parts of the sound spectrum, and lets lower frequencies pass through.
The **cut-off frequency** determines the point at which filtering takes effect. You can control this manually, or by voltage control (**filter modulation**, for instance by an LFO). Two CV inputs are available. The cut-off slope is **-24 dB/octave**.
Voltage controlled resonance: for both A-105 and A-122, resonance can be controlled not just manually, but by voltages as well, right up to self-oscillation. In this case, the filter behaves like a sine wave oscillator.
The **A-105** is based on the special circuit **SSM2044**, that was used in several devices of the companies Korg (Polysix, Mono-Poly), Sequential Circuits (Prophets, Pro-One), PPG, Fairlight, Emu and Kawai.
The circuitry of the **A-122** uses a Curtis CEM 3320 chip, and is very similar to the classic **Oberheim filter sound**. Because of the different circuits the A-105 and A-122 have considerably different sounds and even sound different compared to the other filters (e.g. A-120 Moog-type low pass, A-102 Diode Low Pass or A-103 18dB low pass, A-124 Wasp filter).
As the functions and controls are the same for both modules they are a combined in one manual.

2. VCF 3 - Overview

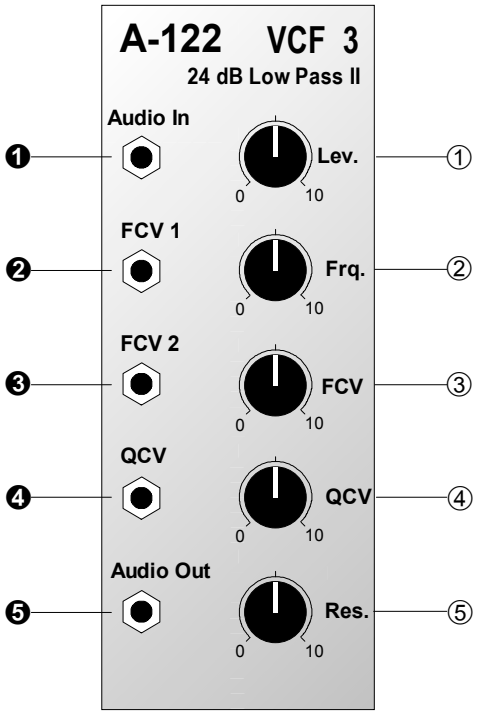

Controls:

① **Lev.** : Attenuator for audio input ❶

② **Frq.** : Cut-off frequency control

③ **FCV** : Attenuator for filter CV at input ❸

④ **QCV** : Attenuator for resonance CV at input ❹

⑤ **Res.**: Control for setting the filter's resonance (emphasis)

In / Outputs:

❶ **Audio In** : Input to the filter

❷ **FCV 1** : Input for voltage control of the filter cut-off frequency (1 V /octave)

❸ **FCV 2** : ditto, level controlled by ③

❹ **QCV** : Input for voltage control of the filter's resonance; level controlled by ④

❺ **Audio Out** : Output from the filter

3. Controls

① Lev.

Use this attenuator to control the amount of signal entering the filter input ❹.

☞ If the filter's output sounds distorted, turn this control down, unless you deliberately want the sound as a special effect.

② Freq.

With this control you adjust the **Cut-Off Frequency f_c**, above which the filter attenuates all frequencies. At 10, the filter is fully open. The more you 'close down' the filter, the more the high frequencies are filtered (see Fig. 1): the sound becomes mellower and less bright, until at 0 the filter is completely shut down, and there will be no output signal at all.

③ FCV

For voltage control or modulation of the cut-off frequency using CV input ❸ (see Fig. 1), use attenuator ③ to control the **level of voltage control**.

④ QCV

Attenuator ④ gives you control over the **level of voltage control** applied to resonance.

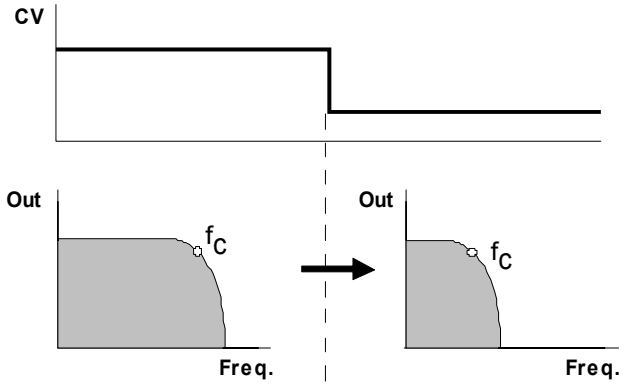

Fig. 1: White noise put through a low pass filter

④ QCV

Attenuator ④ gives you control over the **level of voltage control** applied to resonance.

⑤ Res.

With this control you adjust the filter's **resonance** (or 'emphasis') - the parameter which emphasises the frequencies around the cut-off point f_C (see Fig. 2). It strengthens or emphasises the band of frequencies around the filter's cut-off point.

At close to maximum resonance, the filter starts to self-oscillate, and behaves like a **sine wave oscillator.** Thanks to this effect, you can use the filter as an independent tone source.

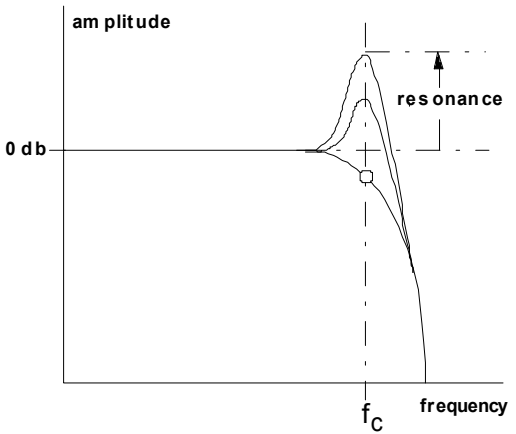

Fig. 2: How resonance affects the behaviour of a low pass filter.

4. In / Outputs

❶ Audio In

This is the filter's **audio input** socket, where you patch in the output from any sound source.

❷ FCV 1

Socket FCV 1 is a **voltage control input** for the filter. It works on the 1V / octave rule, like the VCOs.

If you connect the output of a modulation source (eg LFO, ADSR) to this input, the cut-off frequency of the filter will be modulated by its voltage: ie, the sound color changes according to the voltage put out by the modulator.



If you use this VCF as a sine wave oscillator, connect a pitch control voltage to this input. Do the same if you want the filter's cut-off frequency to track exactly with the pitch of a note.

❸ FCV 2

Socket ❸ is also a **voltage-control input** for the filter. Unlike on socket ❷, though, you can adjust the level of voltage by using the attenuator ③ , and thus control the intensity of modulation effect on the filter.

❹ QCV

This socket is the **voltage control input** for the filter's **resonance**.

If you patch a modulation source (eg LFO, ADSR) to this input, the resonance of the filter will be modulated by it: increases in voltage will increase the amplitude of the frequencies around the filter cut-off point.

❺ Audio Out

Filter output ❺ sends out the filtered audio signal.

5. User examples

The filter's cut-off frequency can be modulated in various ways:

- **VCF - LFO**
  Modulation of the cut-off frequency produces cyclical changes of the **sound spectrum**. At low frequencies (c. 1 - 5 Hz), you get a **"Wah-Wah" effect**. Modulation in the audio range produces interesting sounds; the same principles apply here as with frequency modulation of the A-110 VCO (see chapter 6).
- **VCF - ADSR**
  Modulation by an envelope results in gradual change of the **sound spectrum**. Typical uses would be the **synthesis of electric bass or drum sounds**, and **filter sweeps**, which slowly sweep through the audio spectrum, emphasising different harmonics.
- **VCF - Keyboard CV**
  This modulation produces pitch-related filter opening: the higher the pitch, the more the filter opens, and the brighter the sound becomes.

24 dB Bandpass • 24 dB Notch

By combining the A-123 high pass filter with the A-122 low pass filter, it's possible to create **24 dB band pass** or **24 dB notch filters** (as opposed to the

A-121 multi-mode filter's 12 dB) with **voltage controlled resonance**.
To create a **bandpass** filter, put both modules **in series** (see Fig. 3). The band-width is governed by the difference between the cut-off frequencies of the two filters $\mathbf{f_L}$ (A-122) and $\mathbf{f_H}$ (A-123); the middle frequency is half way between the two: $\mathbf{f_M} = (\mathbf{f_L} + \mathbf{f_H}) / 2$.

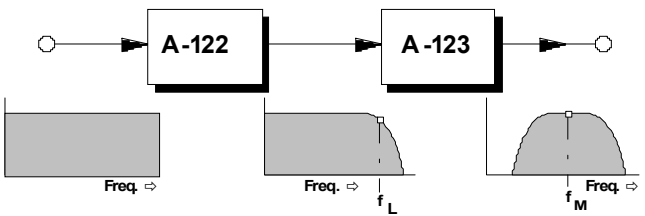

Fig. 3: 24 dB band pass filter (resonance = 0)

A **notch filter** is created by putting both modules in **parallel**, and controlling their outputs with an A-138 mixer (see Fig. 4). The band-width and middle frequency are determined by the same factors as in the bandpass.

When modulating these 'construction kit' filter types, certain rules apply:-

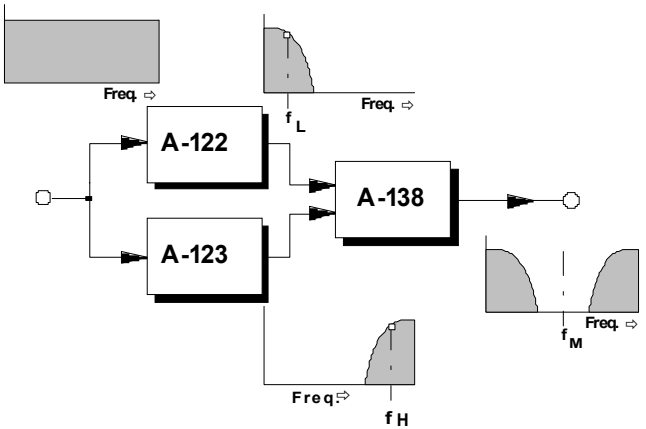

Fig. 4: 24 dB notch filter (resonance = 0)

- To **maintain the exact bandwidth**, the cut-off frequencies of both filters must be modulated by the same amount.
- If you modulate the cut-off frequency of just one of the filters, or both of them by different amounts, or different modulators, the bandwidth and middle frequency will themselves be modulated.
- At a resonance setting of greater than zero, or when the resonance is modulated, the middle frequency will be skewed. With different resonance settings or modulation of each filter, this will have the same result.

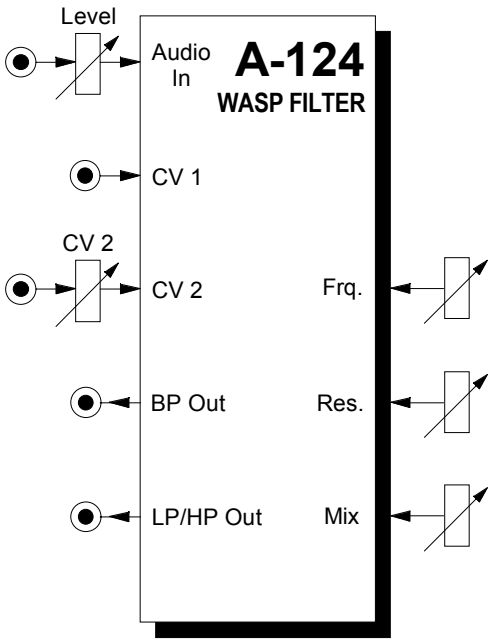

1. Introduction

Module **A-124 (WASP FILTER)** is a special **voltage-controlled multimode filter** with a **cut-off slope** of **-12dB / octave**.
The **special feature** of the A-124 is the peculiar electronic circuitry of the **Wasp** synthesizer manufactured at the end of the seventies by the UK company EDP (Electronic Dream Plant). This synthesizer is well known for its eye-catching black/yellow wasp design and its distinctive filter. Its circuitry "abuses" digital inverters as analog operational amplifiers leading to distortions and other "dirty" effects that generate the specific sound of this filter.

Our version is equipped with a **band pass** output and a combined **low/notch/high pass** output. For this latter output a control knob defines the **relative amounts of low and high pass** signals. If both signals appear at the same level (i.e. middle position of the Mix knob) one obtains a **notch** filter. Otherwise the low or high pass signal predominates.
Resonance can be adjusted manually. The filter can't go into self oscillation, in contrast to most of the other VCFs in the A-100 system.
The **cut-off frequency** can be adjusted manually, or by voltage control. Two CV inputs are available.

2. VCF 5 - Overview

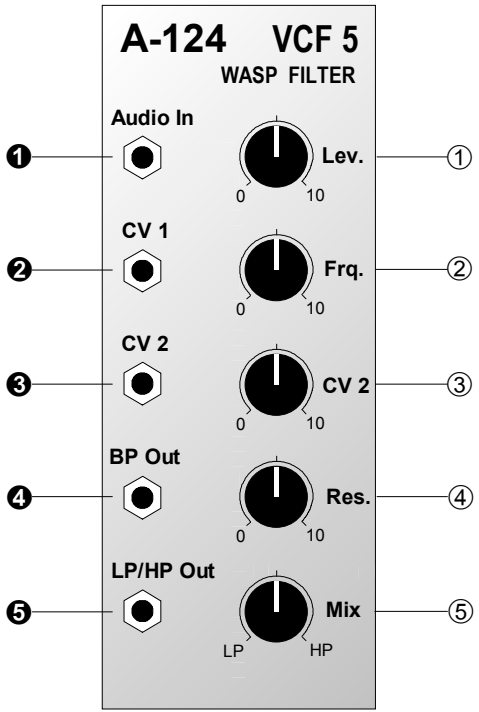

Controls:

①	**Audio Level** :	Input signal attenuator
②	**Frq.** :	Cut-off frequency control
③	**CV 2** :	Attenuator for filter CV ❸
④	**Res.** :	Resonance control
⑤	**Mix** :	Control for relative amounts of low and high pass signal

In / Outputs:

❶	**Audio In** :	Audio input to the filter
❷	**CV 1** :	Cut-off frequency CV input
❸	**CV 2** :	ditto, level controlled by ③
❹	**BP Out** :	Band-pass filter output
❺	**LP/HP Out** :	Mixed low-pass / high-pass filter output

3. Basics

Module A-124 contains three filter types: low-pass, high-pass and band-pass. Low-pass and high-pass signals are internally mixed and appear as the mixed LP/HP output ❹. The mix control ⑤ governs the relative amounts of low-pass and high-pass.

With the mix control fully counterclockwise, at "LP", the mix output forms a *pure* **low-pass**. This is the most common type of filter in analogue sound production, which filters out the higher parts of the sound spectrum, and lets the lower frequencies pass unchanged. **Cut-off frequency f_C** determines the frequency at which this occurs (see Fig. 1).

With the mix control fully clockwise, at ”HP”, the mix output is a *pure* **high-pass**. The high-pass filter is a mirror-image of the low-pass filter: while it lets frequencies that are higher than the cut-off frequency f_C through, it attenuates frequencies below the cut-off point (see Fig. 1).

With the mix control in its middle position, the result is a *symmetrical* **notch** filter, letting through the upper and lower end of the frequency spectrum, but rejecting a band in the middle. If the mid-frequency is modulated by an LFO, the result sounds very similar to phasing.

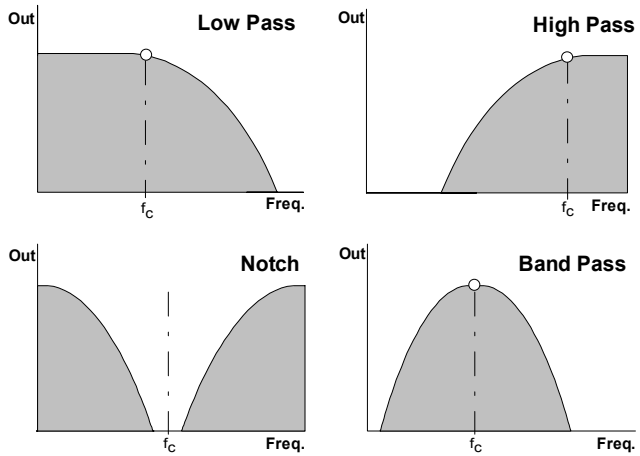

Fig. 1: Typical response curves of the four filter types.

When the mix control deviates from the middle position the **notch** is *asymmetrical*, i.e. the low-pass or high-pass share predominates.

In the band-pass filter, which has its own output, both ends of the frequency spectrum are attenuated (see Fig. 1), and the cut-off frequency f_C becomes the **mid frequency.** It gives you the ability to highlight a particular frequency band.

4. Controls

① Lev.

This attenuator controls the **input level** of the signal to be filtered, entering the module at input ❶ .

☞ If the filter's output signal is distorted, turn this control down, unless the distortion is wanted as a special effect.

② Freq.

The **filter frequency** is adjusted with this control.

③ CV 2

If you want to control or modulate the cut-off frequency by a voltage patched into input ❸, use attenuator ③ **CV 2** to set **the level of voltage control**.

④ Res.

With this control you adjust the **resonance** of the filter (also known as **emphasis** or **Q**), which emphasises the frequencies around the cut-off frequency f_C. As the value for Q gets higher, the frequencies around the cut-off frequency f_C are emphasised. Fig. 2 shows this process using a low-pass filter as an example (a high-pass filter would produce a mirror-image). This way, you can make the frequencies around the cut-off point stand out more.

In band-pass mode, an increase in Q's value makes the bandwidth narrower. The same is true of notch mode, but of course in this case this narrower band will be rejected, instead of let through.

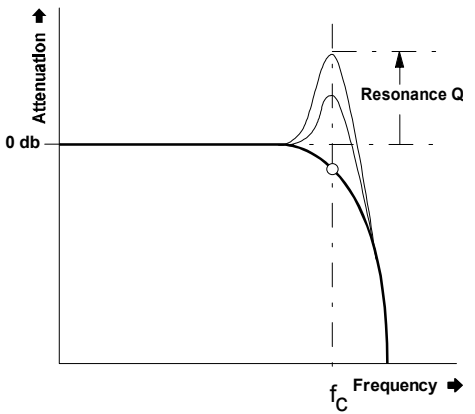

Fig. 2: How resonance affects the response of a low-pass filter around the cut-off frequency.

⑤ Mix

Mix control ⑤ adjusts the relative amounts of low-pass and high-pass signals appearing at the LP/HP mix output ❺.

You can move from pure low pass (LP position on the control) via asymmetrical / symmetrical / asymmetrical notch to pure high pass (position HP).

5. In / Outputs

❶ Audio In

This socket is the filter's **audio input**. Patch the output of a sound source (such as a VCO, noise generator or mixer) into it.

❷ CV 1

Socket CV 1 is a **voltage control input for the filter frequency**. It works approximately to the 1 V / octave standard (like a VCO). Due to the simple Wasp filter design the control scale is not very precise.

If you patch a modulation source (eg LFO, ADSR) into this input, the cut-off frequency of the filter will be modulated by its voltage: ie, the sound color changes according to the voltage put out by the modulator.

❸ CV 2

Socket CV 2 is another **voltage control input for the filter.** Unlike CV 1, you can control the level of voltage - the intensity of the modulation effect on the filter - with attenuator ③.

❹ BP Out

This is the **band-pass** output.

❺ LP/HP Out

This is the **mixed low-pass/high-pass** output.

6. User examples

The A-124's cut-off frequency can be modulated in a variety of ways (see table below).

Modulator	Result
LFO	cyclical changes of the sound spectrum (e.g. A-145, A-146, A-147, A-191)
ADSR	gradual change of the sound spectrum (e.g. A-140, A-141, A-142)
random	random sound changes (e.g. A-118, A-148)
pitch CV	pitch-related filter opening and closing
sequencer	rhythmical sound changes (e.g. A-155)
theremin	body controlled sound changes (e.g. A-178)
light CV	sound changes controlled by illumination intensity (e.g. A-179)
env. follower	sound changes controlled by the envelope of an audio signal (e.g. A-119)
foot control	sound changes controlled by foot controllers (e.g. A-177)
MIDI	sound changes controlled by MIDI events e.g. MIDI controllers (A-191)
...	

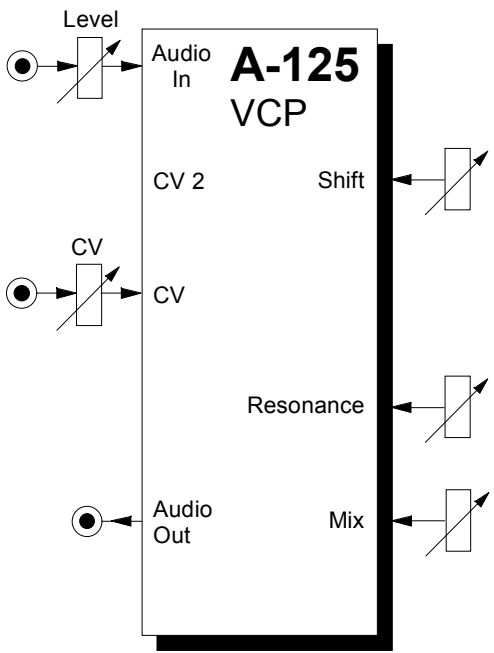

1. Introduction

Module **A-125 (VC Phaser)** is a voltage controlled phase shifter.

Phase shifting can be controlled either manually or by voltage control.

Other parameters which can be controlled are **resonance** (governing the depth of the comb filtering, and tonal color - see page 3) and **mix** (the amount of the original signal which is added to the phase-shifted signal).

2. VC Phaser - Overview

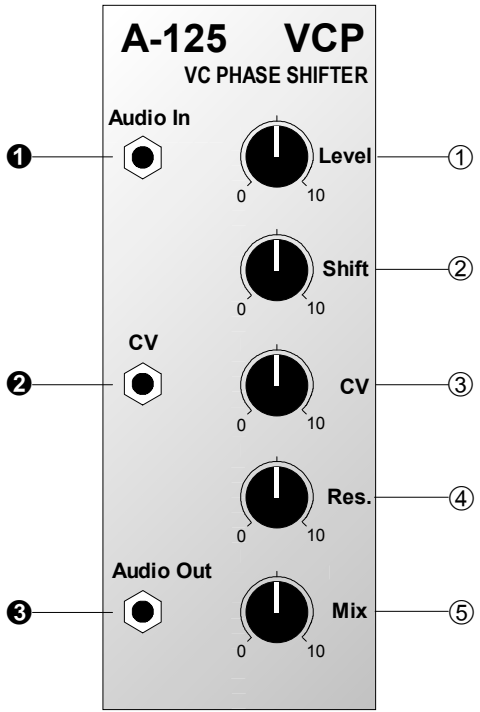

Controls:

① **Level** : Attenuator to control the level of the signal at input ❶

② **Shift** : Control for manually setting the amount of phase shift

③ **CV** : Attenuator for the phase shift voltage control signal at input ❷

④ **Res.** : Resonance control

⑤ **Mix** : Control for setting the amount of the original signal added to the phase-shifted signal

In / Outputs:

❶ **Audio In** : Audio input

❷ **CV** : Input for pitch-shift voltage control

❸ **Audio Out** : Audio output

3. Basic principles

The phasing process relies on dynamic comb filtering. The comb filtering produces a series of gaps in the audio spectrum (in Fig. 1, at 200 Hz, 1 kHz and 5 kHz), by the cancelling process which is created byhaving identical sounds 180° out of phase with each other (or 'inverted').

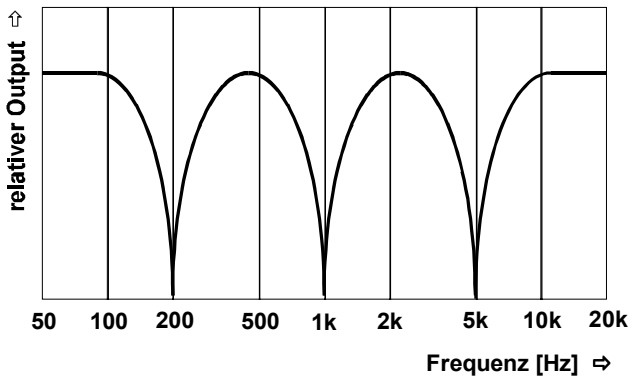

Fig. 1: The principle of phasing

These zero points are continuously swept through the audio spectrum, cancelling out different frequencies, and producing the characteristic phasing sound.

The principle can be explained by looking at the diagram (Fig. 2) of a phaser created by three band pass filters. Here, audio is input to the three filters BP1 to BP3 (notch filters also work), set to different middle frequencies. A slow LFO modulates the frequencies.

The outputs of the band pass filters are then mixed with the original signal. Because of the phase reversal inherent in the filter design (most apparent close to the middle frequency), different areas of the audio spectrum are cancelled out.

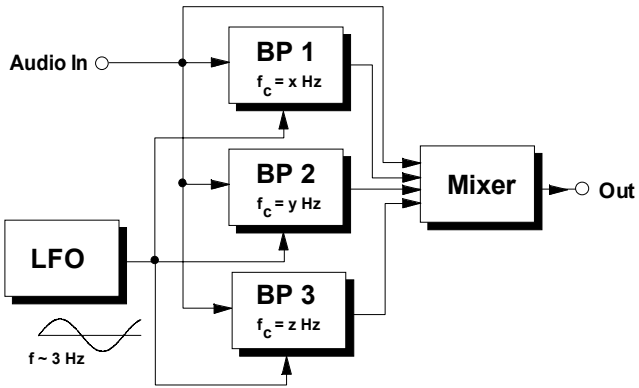

Fig. 2: A phaser model using separate modules

4. Controls

① Level

Attenuator ① controls the **level of the input signal**.

② Shift

Phase shift amount is controlled with this knob, in a range from around 0° to 180°.

③ CV

As well as manual phase shifting, a control voltage at input ❷ can modulate the shift. Attenuator ③ sets the level of voltage control.

As a rule, a slowly changing signal (eg LFO, ADSR, Random, etc.) is used for this modulation.

④ Res.

This knob controls the **resonance** - the amount of the output signal fed back to the input. With this you can control the exact depth of the signal cancellation (see Fig. 1). The resonance parameter controls the tone-colour of the sound; you can't use resonance to make the phaser self-oscillate like on a VCF.

⑤ Mix

Use control ⑤ to determine the exact balance of phase-shifted and original signal. From minimum to maximum produces the following:

Mix = 0 : just phase-shifted signal - "phase / vibrato": the signal sounds somehow skewed.

Mix = 10 : 50% phase-shifted + 50% original signal - phasing: typical swooshy phaser sound.



Try out different settings for resonance and mix, to see how what effect these parameters have on the sound.

5. In / Outputs

❶ Audio In

Socket ❶ is the phaser's audio input.

❷ CV

The control voltage for modulating the speed of phase shifting is input at socket ❷. You can set the level of this CV with control ③.

❸ Audio Out

Output ❸ has the mix of phase-shifted and original signals determined by the position of control ⑤.

6. User examples

Standard set-up

Fig. 3 shows a typical patch, with various alternative sources of slow-changing modulators affecting the speed of the phase sweep.

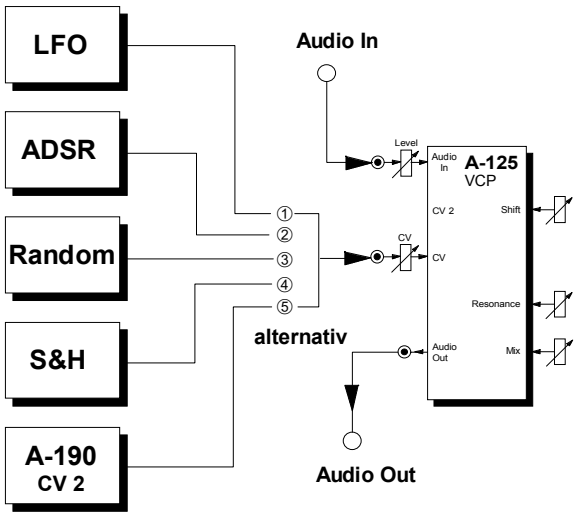

Fig. 3: Typical phaser application

The phaser is simply inserted in the audio path like this. For modulation sources, you could use, for instance, any of the following:

Alter-native	Module	Adjustment	Effect
①	**LFO** A-145	low frequency (< 2 Hz)	free-running phase-shift
②	**ADSR** A-140	slow envelope	keyboard-controlled phaser
③	**Random** A-118	slow random rate	random phasing
④	**S&H** A-148		random phasing
⑤	**A-190** CV 2	any MIDI con-troller for CV 2 (eg. velocity)	MIDI - controlled phasing

With the last two of these alternative modulators particularly, you can optionally use an A-170 Slew Limiter after them, to smooth out sudden jumps of control voltage, and make the phasing transitions less abrupt.

"Stereo"-Phasing

Using two A-125s and the patch in Fig. 4 you can create a wide pseudo-stereo phasing effect, with inverted signals coming out of each of the two audio channels (Out_L und Out_R).

Typically, you can use a slow LFO to provide the modulation for the phase shift, but any other modulator will work, as with standard phasing. Phaser VCP 1 is fed the modulation from the LFO directly, while an A-175 voltage inverter is patched in before the second phaser VCP 2, to invert the modulation.

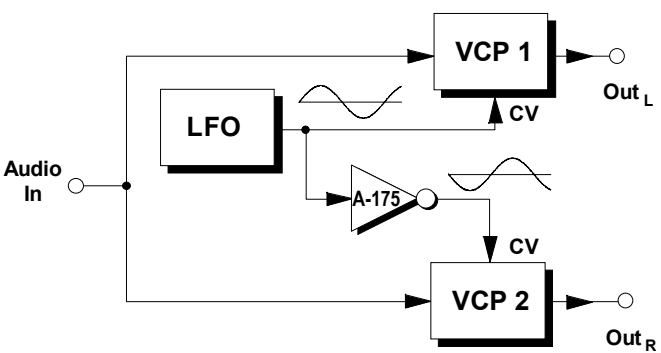

Fig. 4: "Stereo" phasing

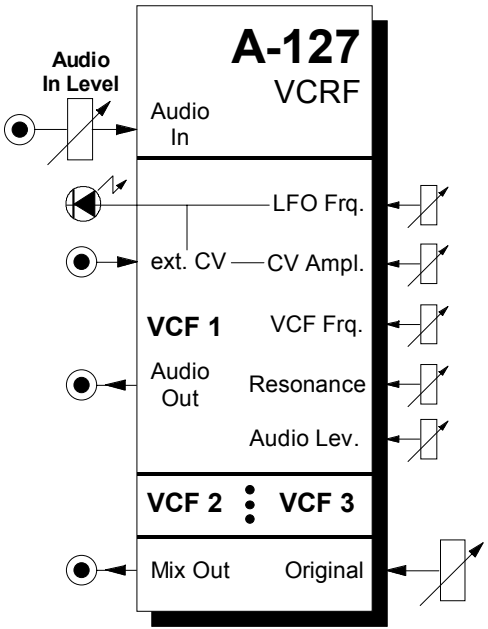

1. Introduction

Module **A-127** is a **Voltage-Controlled Triple Resonance Filter**), consisting of three separate **band pass filters** with one common **input**.

For each of the filters, the **filter frequency** and **Resonance can be manually controlled**, and in addition the filter frequency can be voltage controlled. Each filter has its own **audio output.** There is also a **Mix output** which takes your chosen amounts of each of the three filter outputs and the original signal - set by the Audio Level controls - and outputs them from one socket.

Each of the filters also has an **internal LFO** (a triangle waveform) for modulating the filter, and there are controls for LFO **frequency** and **amplitude**. Instead of the LFO, an **external control voltage** can be used, whose amplitude can be manually controlled.

☞ There is an alternative scenario:- each of the three filters can also be configured as a **12dB low-pass filter** with resonance control. To do this, a jumper has to be repositioned on each of the three circuit boards (see chapter 7, Appendix).

2. VCRF - Overview

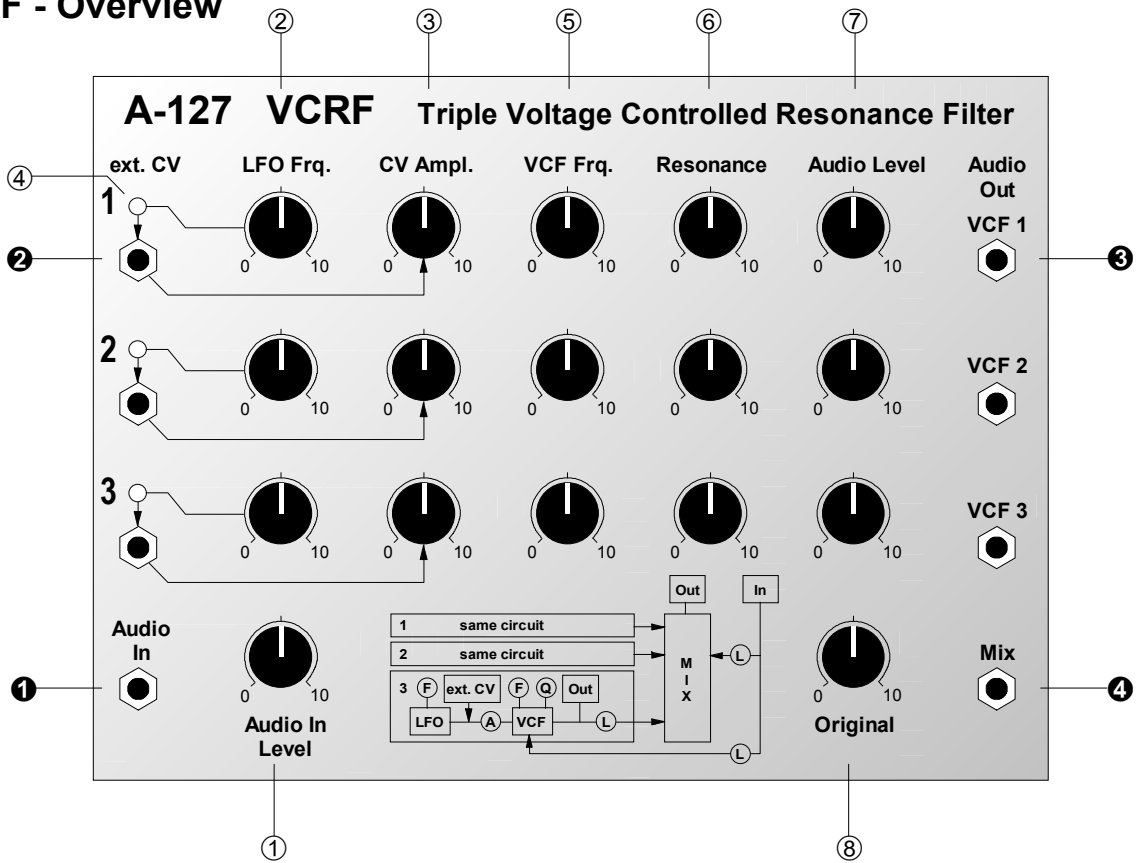

Controls:

① **A. In Level** : Input signal attenuator

per VCF:

② **LFO Frq.** : LFO frequency control

③ **CV Ampl.** : Attenuator for external CV and/or LFO amplitude

④ **LED** : LFO and/or external CV indicator

⑤ **VCF Frq.** : Filter frequency control

⑥ **Resonance** : Filter resonance control

⑦ **Audio Level** : Level control for audio output amplitude of the filter (*)

⑧ **Original** : Control for setting the amount of the original signal present at the Mix output ❹

(*) For modules manufactured until end of 1998 control ⑦ affects both the individual outputs ❸ and the mix output ❹. For modules manufactured 1999 and later control ⑦ affects only the mix output ❹, but not the single outputs ❸.

In- / Outputs:

❶ **Audio In** : Input to the filter

per VCF:

❷ **ext. CV** : Filter frequency CV input

❸ **Audio Out** : Filter output

❹ **Mix Out** : Mix output

3. Basic function

The A-127 is a triple resonant filter containing three band-pass filters each with controllable filter frequency f_M, resonance and amplitude. What a band-pass filter does is to attenuate signals in frequency ranges both above and below the filter frequency - referred to here as the middle frequency - resulting in a bell-shaped response curve (see fig. 1). In this way, a particular part of the audio spectrum can be singled out.

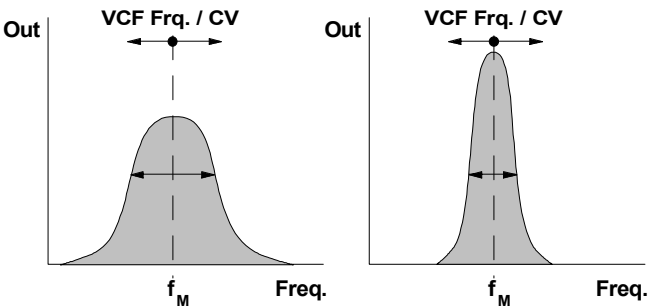

fig. 1: Frequency response of a band-pass filter with lower (on the left) and higher resonance

For each filter you use the frequency control to determine the exact position along the frequency axis, the resonance control to set the width of the frequency band let through, and the Audio Level control to set the volume (see fig. 1).

To make it easier to understand how the A-127 is configured, fig. 2 shows a block diagram of the internal components.

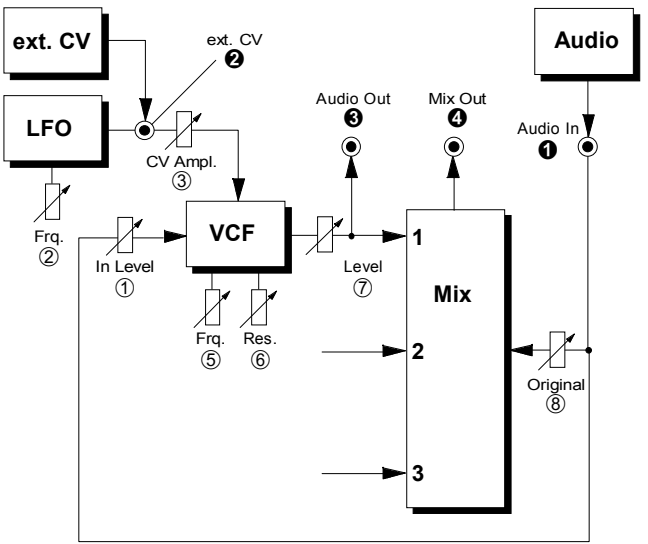

fig. 2: Internal construction of the A-127 (from 1999 output ❸ is not affected by the level control ⑦)

4. Controls

① Audio In Level

With the attenuator ① you can set the **level** of the audio signals coming in to input ❶ .

The filter inputs are very sensitive, so it's possible to **overdrive** the Filter with a normal A-100 signal level (e.g. a VCO). With a VCO being input, overdrive starts kicking in at about halfway on the attenuator knob (①)'s travel.

☞ The module is set up at the factory so that attenuator ① doesn't have any effect on the Original signal level ⑧, so the effected sound (3 Filters) and "Original" sound can be controlled separately, by ① and ⑧ respectively (see fig. 1). It's possible to change this by altering a jumper on the mixer circuit board (see chapter 7, Appendix), so that both the levels (Filter + Original) can be controlled by attenuator ① .

② LFO Frq.

Potentiometer ② gives control of the **LFO frequency**. The frequency of the LFO's **triangle-wave oscillation** can be varied from c. 0.02 Hz (oscillation period c. 1 minute) to c. 20 Hz (oscillation period 1/20 sec).

③ CV Ampl.

The **amplitude** of the **modulation signal** is adjusted with attenuator ③, and the source of this modulation depends on whether anything is connected to socket ❷ .
If the socket has **nothing connected**, the amplitude of the internal **LFO** is controlled; if the socket does have **something connected,** the amplitude of the **external control voltage** is controlled.

④ LED

LED ④ gives a visual indication of the modulation signal produced by the LFO.

⑤ VCF Frq.

Control ⑤ is used to set the **filter frequency f_M** (range: ~ 40 Hz to ~ 8 kHz).

The actual filter frequency is determined by the sum of the voltages from the control knob and the modulation signal (LFO or external control voltage).

⑥ Resonance

Control ⑥ is used to set the **filter resonance**. The higher this control is set, the narrower the **bandwidth** of the bandpass effect (see fig. 1).

If the module has been re-configured to be a **low pass filter**, control ⑥ boosts the frequencies around the filter cut-off point (see also the A-120 and A-122 low pass filter modules). Using the filter at high resonance to produce its own pitched tone (self-oscillation) isn't possible with this module.

⑦ Audio Level

Attenuator ⑦ adjusts the **amount of the signal** from each of the filters to be fed into the **Mix signal** at output ❹.

☞ For modules manufactured until end of 1998 control ⑦ affects both the corresponding individual output ❸ and the mix output ❹. For modules manufactured 1999 and later control ⑦ affects only the mix output ❹, but not the single outputs ❸.

⑧ Original

Whatever original signal was present at socket ❶ can also be added into the internal mixer. The **amount** of the original signal fed into the **mix output signal** is set by attenuator ⑧.

☞ The module is set up at the factory so that attenuator ① doesn't have any effect on the Original signal level ⑧, so the effected sound (3 Filters) and "Original" sound can be controlled separately, by ① and ⑧ respectively (see fig. 1). It's possible to change this by altering a jumper on the mixer circuit board (see chapter 7, Appendix), so that both the levels (Filter + Original) can be controlled by attenuator ① .

5. In- / Outputs

❶ Audio In

This is the socket into which you connect the **audio signal which you want to be filtered.**

❷ ext. CV

Socket ❷ is the **control voltage input,** used for modulating the filter via external voltage control (ADSR, LFO, sequencer - see chapter 7, User Examples).

This is a **normalled (switched) socket**. If no connection is made, the **internal LFO** serves as the modulation source instead.

❸ Audio Out

Each **filter Audio output** ❸ sends out the signal processed by the particular filter. Despite what the diagram on some of the early A-127 modules shows, the Audio Level control ⑦ does also affect these individual outputs, because the individual output comes after the Audio Level control in the circuit.

❹ Mix

At socket ❹ the **mixed output** from the internal mixer is available. That includes the output from each of the three filters (with level from each filter set by control ⑦) and the original signal (with level set by control ⑧).

6. User examples

By controlling filter frequencies with the internal LFO or external voltages, the A-127 can produce extremely complex filtering effects.

The control possibilities available with **external Modulation sources** are almost limitless.

Here are just a few examples:-

- **LFO**
  other waveforms - not just triangle; LFO frequencies in the Audio- range
- **ADSR**
  different envelopes for each of the individual filters; complex filter sweeps
- **MIDI Interface A-191**
  different MIDI controllers for each of the individual filters: MIDI-controlled vowel sounds (see Examples below)
- **Random-CV A-118**
  random filter settings
- **Theremin A-178**
  filter settings by remote control!
- **Sequencer A-155 or MAQ 16/3**
  vocoder- and speech-like effects with specially shaped external CV sequences (see below)

- **S&H filter effects with an A-148**
  the A-148 Sample&Hold samples signals from modulation sources (LFO, Noise, Random, VCO, etc.) at regular clock intervals (see fig. 3)

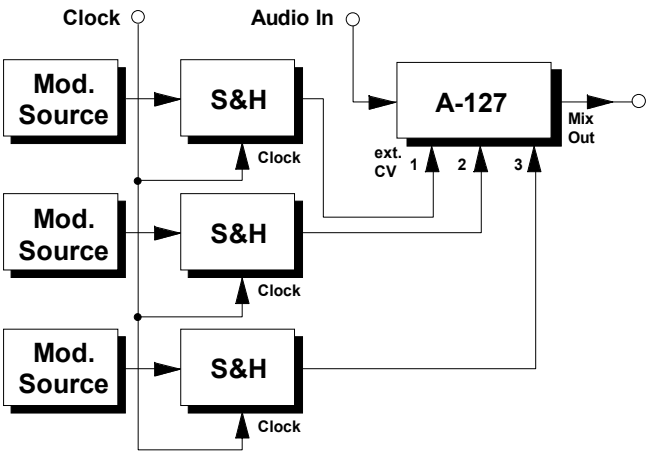

fig. 3: S&H filter effects with an A-148

One of the A-127's particular strengths is its ability to bring out the **formants** that are crucial in re-creating some sounds. It's able to latch on to particular frequencies or ranges of frequencies which are characteristic of an instrument, a room, or an acoustic effect, and emphasise them within the whole frequency spectrum.

Equalisation is often used to suppress these formants when a room's acoustics need to be neutralised; but the A-127 can actually work the other way, to simulate a real room's formants, and bring a sound alive.

A special application of this ability to build up formants can be to simulate human speech - or more exactly, **human vowel sounds.**

What happens when a person pronounces a vowel is that the overtone-rich vocal cord sound sets off all sorts of resonances in the mouth, nose and throat, whose frequency depends mostly on the shape of the mouth and position of the tongue.

The characteristic sound of each vowel is created by formants - ranges of frequencies emphasised by the mouth and throat creating resonant cavities which pick out harmonics from the basic sound of the vocal cords.

The most important frequencies for formants in German vowel sounds is shown in fig. 4.

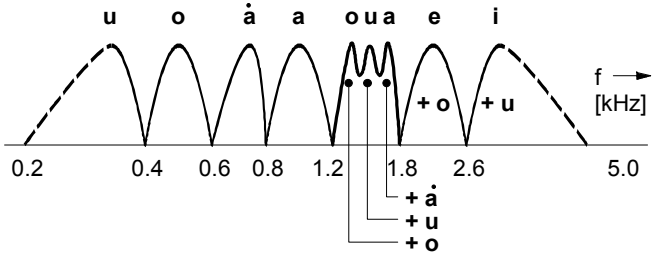

fig. 4: German vowel formant frequency range.

In the patch in fig. 5, this process is simulated by two of the A-127's band-pass filters, with the sawtooth output from a VCO acting as the sound source. An A-155 sequencer controls the A-127. Pitch is controlled by a keyboard.

The resonance of both of the band-pass filters should be set quite high. The sounds from this patch will be more realistic if the individual sounds slide from one to the next (using the Glide Control on the A-155).



It's also possible to use **non-harmonic** sound spectra (e.g. ring modulator signals) for further experimentation.

Another source for discovering the formant frequency range of English language vowel sounds is Allen Strange's book Electronic Music. Here, he specifies three centre frequencies for the formants for each of the vowel sounds (see Table 1).

Band	ee	i	e	ae	ah	aw	u	oo	A	er
1	270	390	530	660	730	570	440	300	640	490
2	1990	1840	1720	1090	1840	1020	870	1190	1350	-
3	3010	2550	2480	2410	2440	2410	2240	2240	2390	1690

Tab. 1: Band-pass filter frequencies 1 to 3 for the production of male vowel sounds (from: Allen Strange, "Electronic Music")

If you're trying out the patch in fig. 5, then just use the first two frequency settings in each set of three.

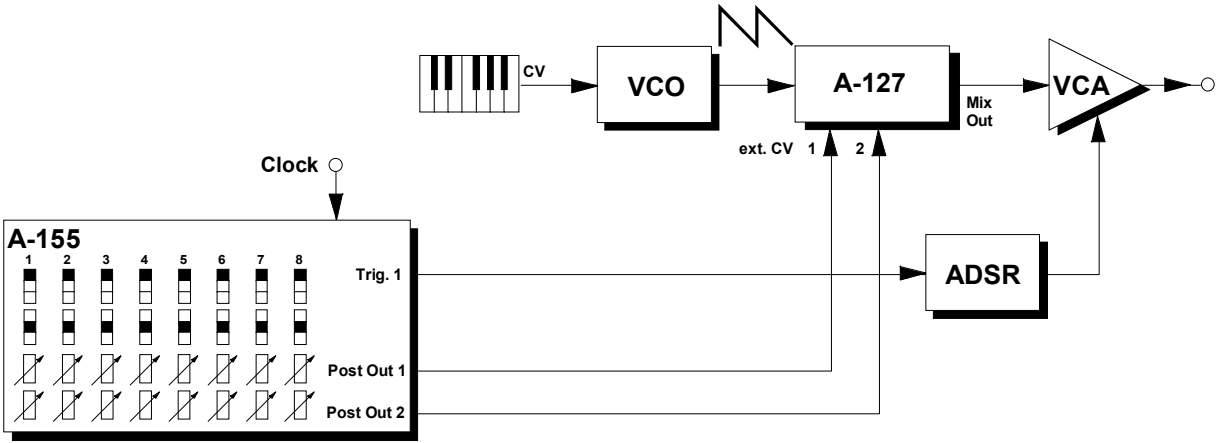

fig. 5: Simulation of vowel sounds

Otherwise, three vowel formant frequencies can be produced using either a MAQ 16/3 sequencer, with three control voltages per step, or by running two A-155 sequencers in parallel. In this case, you could use the spare CV from the second A-155 for pitch control (instead of an external keyboard) or to produce different decay times, by using a VC-ADSR instead of a standard ADSR.

7. Appendix

Altering the filter characteristics

The **characteristics** of each of the indifividual filters in the A-127 can be altered by changing the position of a corresponding jumper on its three-pin connector on the filter circuit-board.

The standard factory setting is for each of the filters to be set to the bandpass position (labelled "BP").

You can, if you want, alter the response of each **individual filter**, so that it is **12 db low-pass.**

Versions 1 and 2 of the A-127 module:

Change **Jumper J1** on the filter circuit board from position "BP" to **position "LP"** (low pass) - see Fig. 6.

Version 3 of the A-127 module:

Change the position of **Jumper JP5** on the filter circuit. JP5 is located behind der filter output socket.

Even a toggle switch can be added to switch between low pass and band pass for each filter.

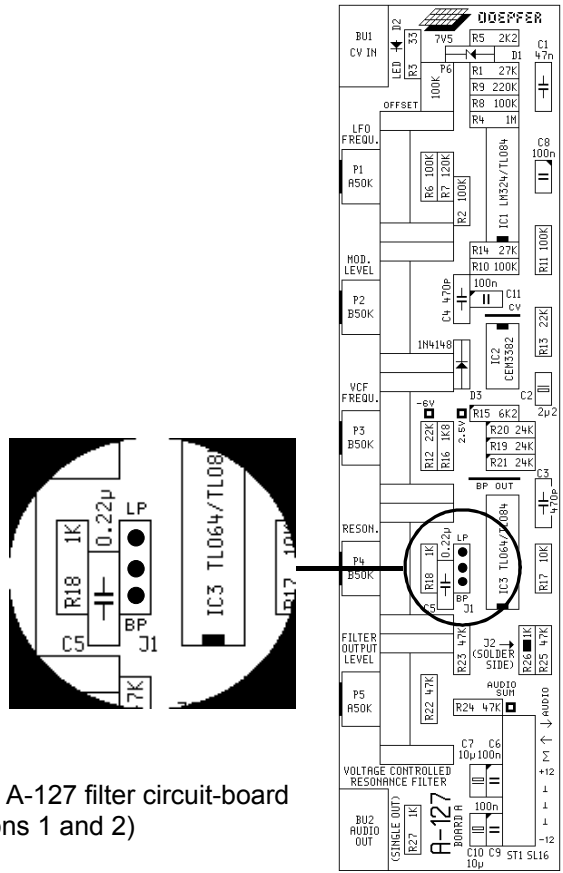

fig. 6: A-127 filter circuit-board (versions 1 and 2)

Changing how control ① works

As standard from the factory, Attenuator ① doesn't have any effect on the Original control ⑧, so that it's possible to adjust ① and ⑧ independently.

Versions 1 and 2 of the A-127 module:

To change this, you can alter the position of **Jumper J3** on the **Mix circuit-board** from "Pre" (the factory default) to **"Post"** (see fig. 8). In this case, control ① comes before the Original signal level control ⑧, and so does affect both the filter and Original signals.

Version 3 of the A-127 module:

Change the position of **Jumper JP4** on the mix circuit board. JP4 is located right beside the Audio In Level control.

Even a toggle switch can be added to switch between pre and post setting of control ol ①.

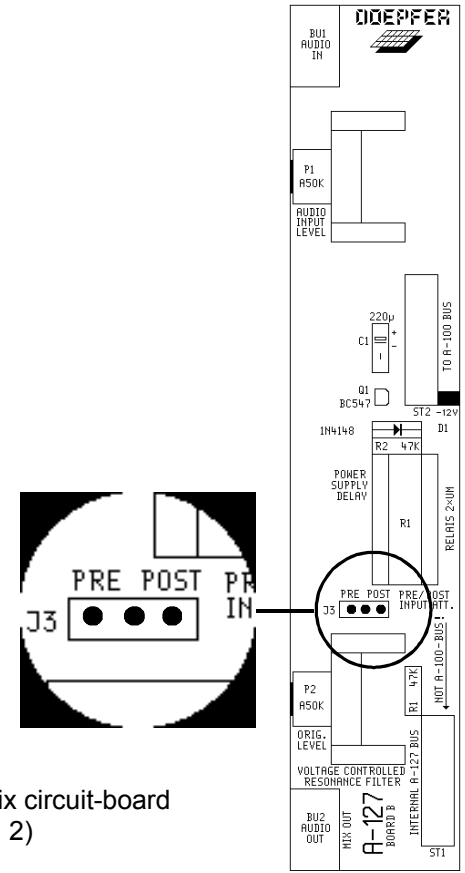

fig. 8: A-127 mix circuit-board (versions 1 and 2)

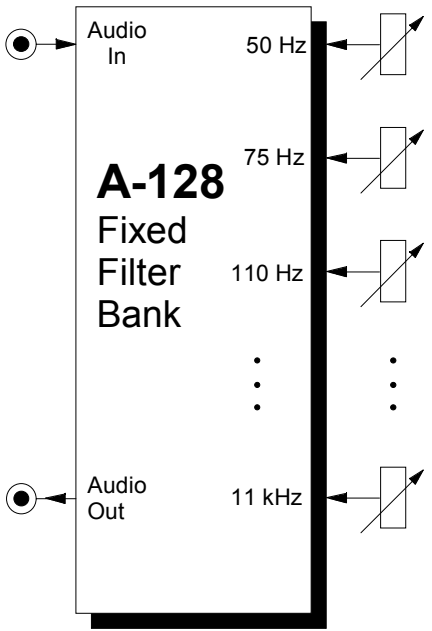

1. Introduction

Module **A-128 (Fixed Filter Bank)** is a filter bank, made up of **15 parallel band pass filters**, all with **fixed middle frequencies and bandwidth:**

50 Hz	350 Hz	2.2 kHz
75 Hz	500 Hz	3.6 kHz
110 Hz	750 Hz	5.2 kHz
150 Hz	1.1 kHz	7.5 kHz
220 Hz	1.6 kHz	11.0 kHz.

Each band pass filter has its own **amplitude control knob**, with which that frequency band can be attenuated. The bandwidth of each of the filters is approximately half an octave.

The signal at the output of the A-128 contains a mix of all the filters, depending on the position of each one's amplitude control knob.

The filter bank's main job is to emphasise individual sections of the whole audio frequency range. It's like a passive 15-band EQ.

2. A-128 - Overview



Controls:

① **50** ... **11000** : Amplitude controls (attenuators) for the individual band pass filters

In / Outputs:

❶ **Audio In** : Signal input

❷ **Audio Out** : Signal output

3. Controls

① Controls 50 Hz ... 11 kHz

With these controls you can set the **amplitude** of each of the 15 bandpass filters (see Fig. 1).

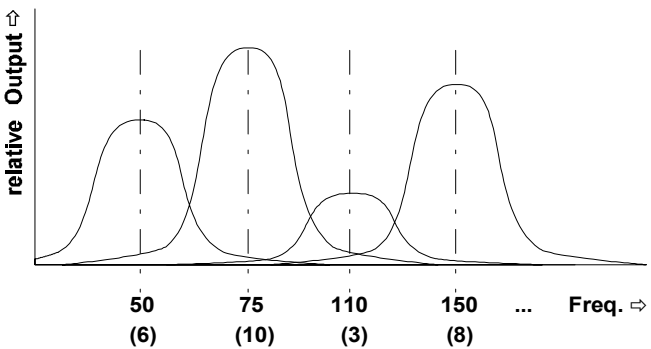

Fig. 1: The effect of different amplitude levels on the band pass filters.

4. In / Outputs

❶ Audio In

Socket ❶ is the filter bank's **input**, into which you patch the signal you want filtered.

❷ Audio Out

Output ❷ carries the signal filtered by the 15 band pass filters. The tonal quality will depend on the settings of the individual amplitude controls.

5. User examples

The main purpose of the Fixed Filter Bank is for changing the colour of an audio signal (including external signals that can be patched in via an A-119 module) by attenuating certain frequency bands. This is similar to an equalizer, except that an equalizer can also boost frequency bands, while the fixed filter bank only attenuates them.

Because each of the bands is very narrow (only about half an octave or a musical fifth) drastic tonal changes are possible - for instance 'telephone-voice' or vocoder-like effects.

Also, even with each band's amplitude control set to identical positions, a tonal change occurs (see Fig. 2); a neutral 'straight-through' setting isn't possible.

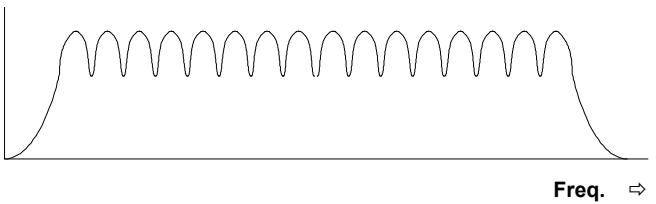

Fig. 2: Filter response with all controls fully up

Emphasising certain frequencies

The patch in Fig. 3 shows how to **emphasise** certain frequencies using a filter bank.

The original signal and the output from the band pass filter are both patched into an A-138 mixer.

This patch is really a special case (with no attenuation) of the set-up on the following page.

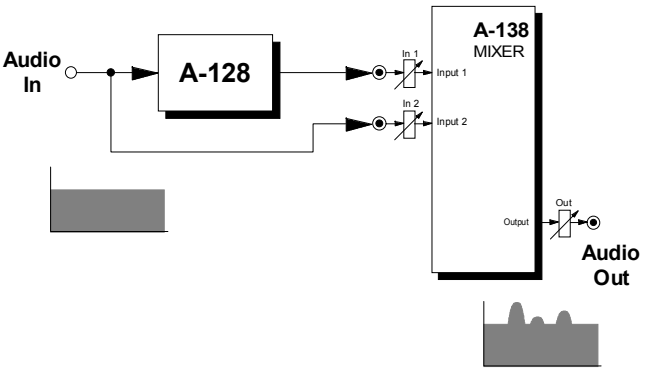

Fig. 3: Emphasising certain frequencies

Creating a multi-band equalizer

The patch in Fig. 4 shows how to model a simple graphic equalizer. An A-138 Mixer is used to mix the following signals:

- **Input 1**: the signal from the audio output of the filter bank, via an A-175 inverter.
- **Input 2**: the signal from the audio output of the filter bank.
- **Input 3**: the original signal

Using the mixer pots "In 1", “In 2” and "In 3", you can control the relative mix of the signals :-

- **In 1**: Amount of cut
- **In 2**: Amount of boost
- **In 3**: Amount of original signal

To model an equalizer, you adjust the mixer pots as per the above table. Naturally, any mix is possible, by adjusting the pots according to the following formula :

Audio Out = - In 1 • filter signal
+ In 2 • filter signal
+ In 3 • original signal

Pot	just the original	just the filter bank	original + boost	original + cut
In 1	0	0	0	0 ... 10
In 2	0	10	0 ... 10	0
In 3	10	0	10	10



Patching a VCA in before the mixer’s inputs can give voltage control of the relative amounts.

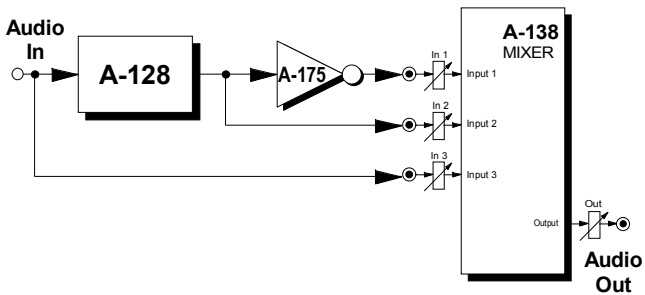

Fig. 4: Creating a multi-band equalizer

6. Patch-Sheet

The following diagrams of the module can help you recall your own **Patches**. They're designed so that a complete 19" rack of modules will fit onto an A4 sheet of paper.

Photocopy this page, and cut out the pictures of this and your other modules. You can then stick them onto another piece of paper, and create a diagram of your own system.

Make multiple copies of your composite diagram, and use them for remembering good patches and set-ups.



- Draw in patchleads with colored pens.
- Draw or write control settings in the little white circles.

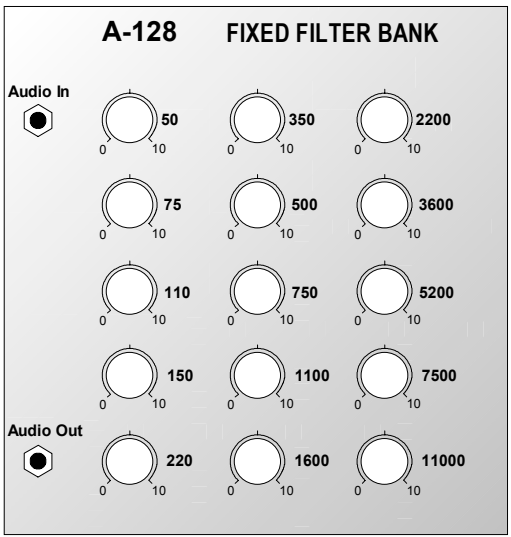



1. Introduction

The **A-129 /x** series of modules forms a **modular vocoder**. 'Vocoder' is an abbreviation of 'voice coder'.

The basic components are an **analysis section** (**A-129 /1**) and a **synthesis section** (**A-129 /2**).

Like a ring modulator, the vocoder needs two input signals: a **speech element** which serves as the raw material for the tonal shaping, and is patched into the analysis section; and a **carrier signal**, which is patched via the instrument input into the synthesis section.

The speech signal is chopped up and analysed in the A-129/1 module, and then combined with the carrier signal in the A-129/2 synthesis section. As a result of this procedure, the carrier signal assumes the tonal character of the speech signal, but with its own pitch maintained.

Since the A-129 is a modular vocoder, and the connections between the analysis and synthesis section are external, using patch-leads, you can use this interface to **patch in** your choice of **modules** (eg. attenuator, slew limiter, CV-to-MIDI / MIDI-to-CV interfaces,, inverter, etc.).

The **Five-way VC slew limiter / offset generator / attenuators (A-129 /3)** and **Slew controllers** (**A-129/4**) are particularly designed for this purpose.

There's also the possibility of connecting the frequency bands of the analysis and synthesis sections arbitrarily, so that, for instance, a low frequency band in the speech signal can control a high frequency band in the carrier signal.

The **Voiced / unvoiced detector** (**A-129 /5**) can recognise voiced and unvoiced sections in the speech signal, and switch the carrier signal accordingly.

The A-129 /2 synthesis section can also be used as a stand-alone voltage-controlled filter bank (see chapter 6, User examples).

2. A-129 /1, /2 - Overview

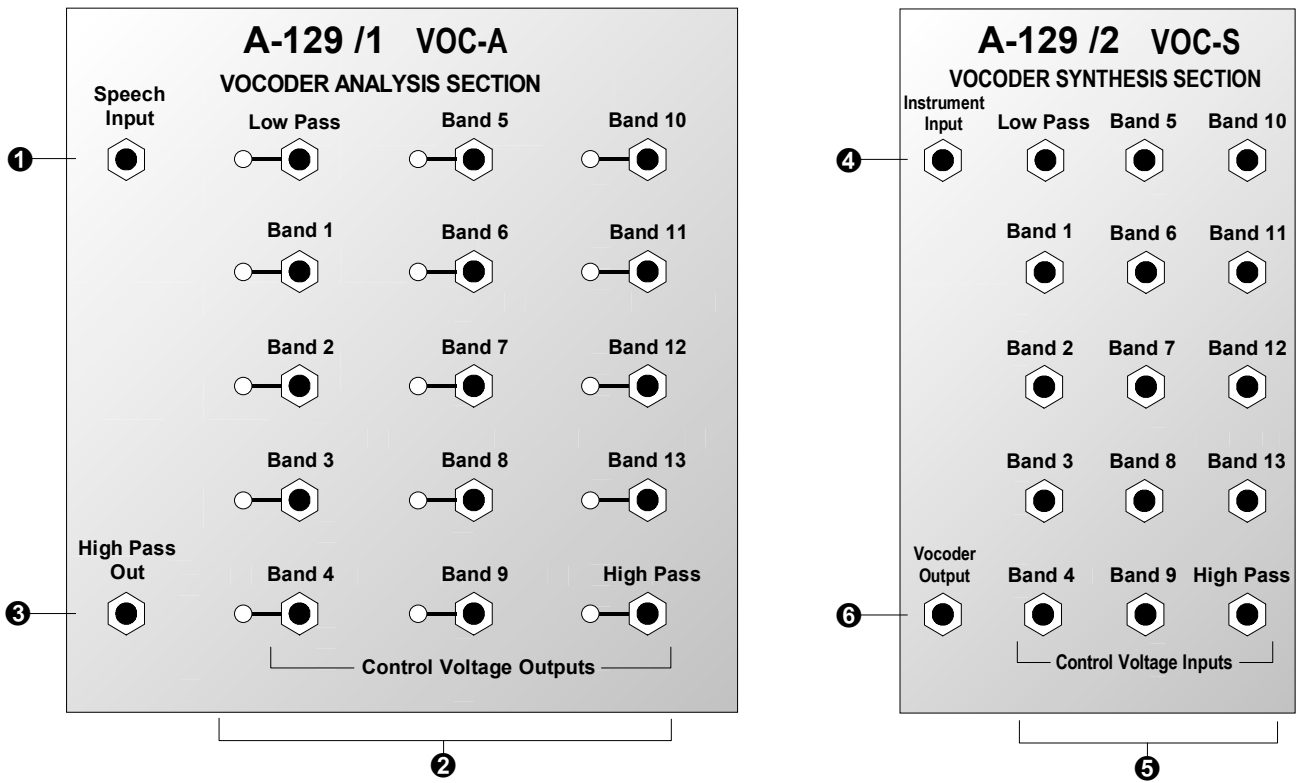

In / Outputs:

A-129 /1

❶ **Speech In** : Input for the speech signal

❷ **CV Outputs** : 15 CV outputs with control LEDs

❸ **High Pass** : Signal output from the high pass filter

A-129 /2

❹ **Instrument In** : Input for the instrument signal

❺ **CV Inputs** : 15 CV inputs

❻ **Vocoder Out** : Audio output from the vocoder

The following Table 1 shows the cut-off frequency of the low pass filter, the middle frequency of the band pass filters (Band 1 to Band 13) and the cut-off frequency of the high pass filter.

Filter	Frequency	Filter	Frequency
Low Pass	100 Hz	**Band 8**	1.3 kHz
Band 1	120 Hz	**Band 9**	1.6 kHz
Band 2	160 Hz	**Band 10**	2.3 kHz
Band 3	230 Hz	**Band 11**	3.3 kHz
Band 4	330 Hz	**Band 12**	5 kHz
Band 5	500 Hz	**Band 13**	7.5 kHz
Band 6	750 Hz	**High Pass**	10 kHz
Band 7	1.1 kHz		

Tab. 1: Filter frequencies in the analysis and synthesis sections

3. Basic principles

The fundamental modules in this vocoder are the **analysis section A-129 /1** and the **synthesis section A-129 /2** (see Fig. 1).

The **speech signal** is analysed in the A-129 /1, by being passed through a set of steeply sloping **band pass filters**, with a **low-** and **high- pass filter** mopping up the bottom and top frequencies respectively. Attached to each of these filters is an envelope follower, which analyses the audio signal level passing through, and sends a proportional voltage out of its dedicated **CV output** (see below for further details).

The **instrument signal** is likewise sent through another set of steeply sloping band pass filters, and a low- and high-pass filter in the A-129 /2 synthesis section, and is split into individual frequency bands. This time, each filter has an associated **VCA (voltage controlled amplifier),** which is governed by the voltage present at its **CV input**.

In this way, each frequency band in the instrument signal has the dynamics of the corresponding band from the speech signal superimposed onto it. The pattern of the speech signal is thus re-constructed from the tonal raw material of the instrument signal. The closer the audio spectra of the speech and carrier signals are, the more speech-like the resulting reconstruction.

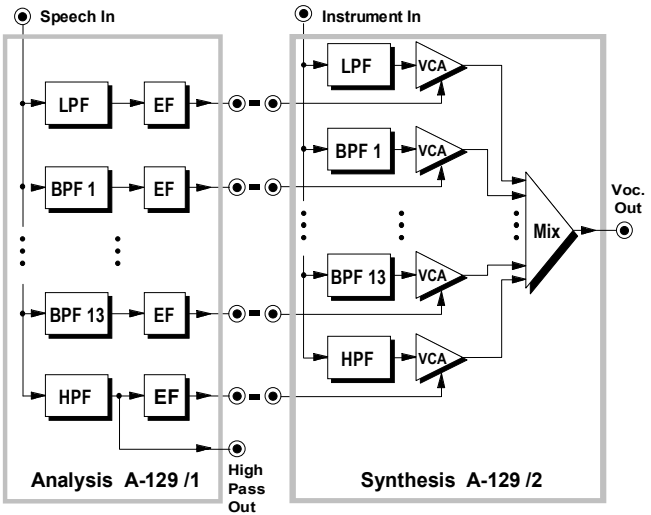

Fig. 1: Block diagram of the A-129 analysis and synthesis sections

☞ In most standard vocoders the voltage signals from the analysis section are fed straight into the synthesis section. With the A-129 modular vocoder, they are patched externally via 15 leads.

That means it's possible to modify the control voltages by patching any sensible choice of module (for instance attenuators, slew limiters, LFO, CV-MIDI / MIDI-CV interfaces, inverters, etc.), between the analysis and synthesis sections. Not-so-sensible choices may produce interesting results, too.

It's also possible to interconnect control voltages to synthesis section inputs in a non-standard way, so that for instance the output from a low frequency band from the speech signal can control a high frequency element of the carrier signal.

With a modular vocoder, the only constraints on experimentation are the limits of your imagination (and you can also always have a look at chapter 6, User examples).

4. In / Outputs

❶ Speech In

Socket ❶ is the **input** to the analysis section. This is where the speech signal is patched in.

Don't forget that the speech signal needs to be at the high level the A-100 uses internally. **Plugging a microphone directly in** to the vocoder **won't work.** You need to use an **A-119** External Input module, into which you can plug a microphone or other external signal. Then the output of the A-119 can be patched into input socket ❶ on the analysis section.

❷ Low Pass • Band 1 to Band 13 • High Pass

These are the **CV outputs** ❷ from the analysis section, whose voltages are determined by each filter's envelope follower. Each CV output has an **LED** connected to it, showing the strength of the voltage generated.

❸ High Pass

Socket ❸ on the analysis section is the **high pass filter output**. Unlike the other sockets, this is an **audio output**, which sends out the part of the speech signal which the high pass filter lets through. This is most usually added to the vocoder output, to make the modified carrier signal more speech-like still, by including these high frequency elements of the sound.

❹ Instrument In

Socket ❹ on the synthesis section is where you patch in the instrument that will provide the carrier signal (see below).



Experiment with different sorts of sound for the carrier signal, for instance

- sawtooth or square waves from a VCO,
- noise (A-118),
- digital noise (A-117).



With an **A-129 /5** voiced / un-voiced detector module, you can switch the carrier signal depending on whether a speech signal is present.

❺ Low Pass • Band 1 • Band 13 • High Pass

The **CV inputs ❺** on the synthesis section are where the **control voltages** from the analysis section are patched in.

❻ Vocoder Out

Output ❻ on the synthesis section is the audio output for the whole vocoder.

5. User examples

Basic principles

To get the best results from the vocoder, it's essential to take note of the following important points:

- For professional results, the quality of the speech signal is crucial.

  If you use a cheap and cheerful microphone, connecting it up to the vocoder via the A-119 won't guarantee good results.
  Any unwanted noise (rumble, airborne background sounds, etc.) will greatly reduce the effectiveness of the vocoding.
  According to various musicians including Kraftwerk, the speech signal is easier to use if it isn't live, but has been taped or sampled, and thus has reliable levels and signal-to-noise - and is repeatable.

- For early experiments, radio news stations provide good raw material, because they are nearly always putting out a steady stream of human speech.

- In addition, we plan to bundle an audio cassette of speech with each vocoder.

- For the best results, speech and carrier signals need to have similar frequency spectra. A quiet female voice, or a child's, needs a different carrier signal compared with a low-register male voice. If you use a VCO as the carrier signal, you can tune it to find the ideal frequency.

- Basically, the instrument's carrier signal needs to be as overtone-rich as possible, with a dense audio spectrum. With a VCO the sawtooth output is best suited to the task. An exact square wave has only half as many harmonics, and triangle and sine waves are completely unsuitable (see the notes to the A-110 and/or A-111).

- For professional results, it's recommended to use a graphic or parametric EQ to equalize the speech signal to produce the most speech-like results at the vocoder's output. Good results can also be obtained using computer-generated speech (as on the A-100 demo CD).

Using just the basic modules

Just with the A-129 /1 and A-129 /2 modules (and an A-119 external input), all the common vocoder effects can be produced (see Fig. 2).

- ❒ First patch all the CV outputs on the analysis section to their respective CV inputs on the synthesis section (band 1 to 1, 2 to 2, and so on)
- ❒ Use an **A-119 (External Input)** to patch an audio signal (see above, chapter 5, Basic Principles) into the speech input socket of the analysis section at normal A-100 operating level.
- ❒ Experiment with different audio signals for the carrier frequency (instrument input), for instance:-
  - different overtone-rich waveforms from a VCO,
  - pink or coloured noise from an A-118,
  - digital noise from an A-117,
  - ring modulator outputs,
  - two VCOs modulated in the audio range by FM or AM.
- ❒ Swap the connections between analysis and synthesis sections (see above).

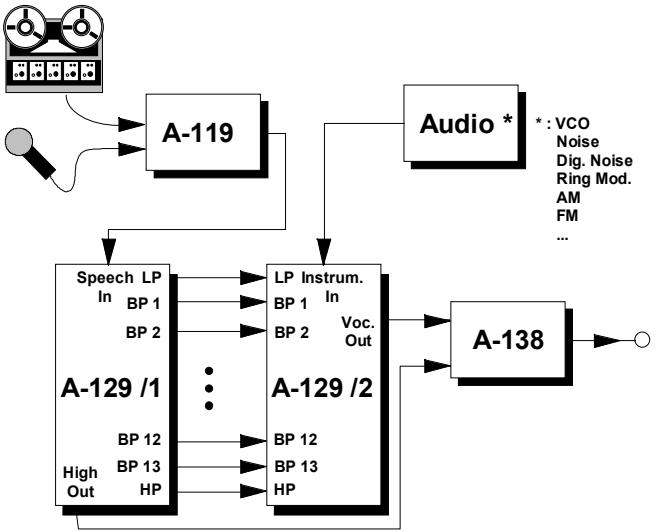

Fig. 2: Basic vocoder schematic

"Frequency displacement"

If instead of patching the outputs from the analysis section to their 'proper' respective inputs in the synthesis section, you swap them about instead, interesting frequency displacements occur in the vocoder output.

Fig. 3 shows some simple variations; experiment withall sorts of other possibilities.

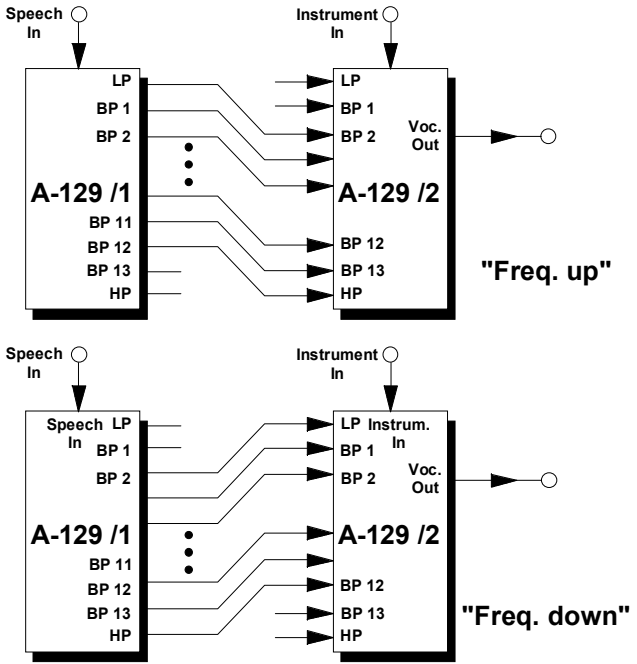

Fig. 3: "Frequency displacement"

"Chopped up" speech

The patch in Fig. 4 produces chopped-up speech: the vocoder chops speech up rhythmically, in time with the trigger signals. The vocoder output is patched into a VCA, which is controlled by a rhythmical pulse from an ADSR (A=0, R=0, D and S to taste). The source of the trigger signal could be an MAQ 16/3, Schaltwerk or trigger from a MIDI sequencer via a MIDI Interface such as the A-190.

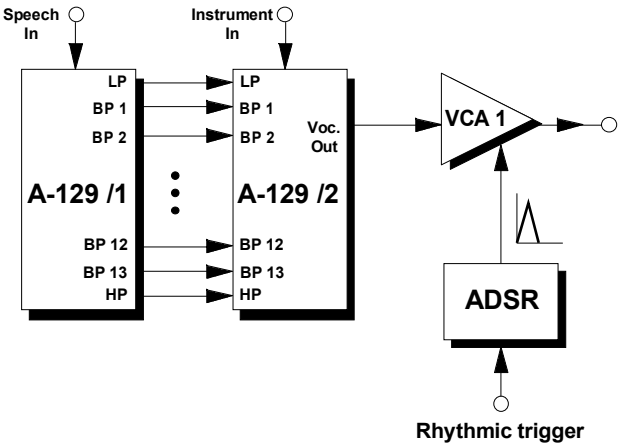

Fig. 4: Rhythmically chopped-up speech

Using with the other modules (/3, /4, /5)

While extremely usable vocoder sounds can be produced with just the two basic modules, total flexibility and unlimited possibilities are offered by adding on the extra modules (A-129 /3, A-129 /4, A-129/5).

Full user instructions will be found in the modules' own manuals.

A-129 /2 as a MIDI-controlled filterbank

The vocoder's synthesis section can also, in conjunction with a special A-191 MCV16 module, be used as a MIDI-controlled filterbank (see Fig. 3).

The level of each of the control voltages (Input ❻) determines the relative level of each of the frequency bands at the A-129/2's output socket ❺.

These CVs are patched from a special **A-191** MIDI-CV-Interface (with 16 CV outputs and no MIDI-LFO) and are controlled by various continuous controllers - see the A-191 manual for details.

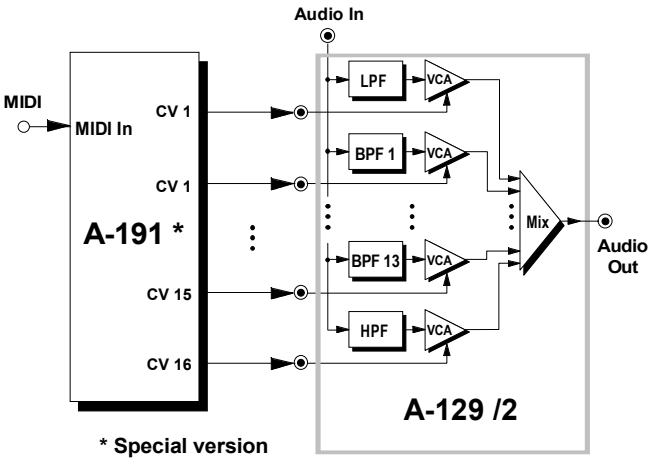

Fig. 3: The A-129 /2 as a MIDI-controlled filterbank

1. Introduction

The **A-129 /x series of modules is a modular vocoder. The crucial components are the A-129 /1** (analysis section) and **A-129 /2** (synthesis section).

Module **A-129 /3** adds a **Slew Limiter** to the vocoder. It includes 5-way **Attenuators**, 5-way **Offset Generators**, and a **Slew Limiter** (which works on all the voltages at the five CV inputs simultaneously).

Using the **A-129 /3 just on its own**, two functions are available:

- **Attenuator:** whatever signal is patched into the CV input can be attenuated by your chosen amount before being sent to the CV output. The attenuation is set with a control knob.
- **Offset Generator**: whatever signal is patched into the CV input will have an offset voltage added to it before being sent to the output. The offset is variable with a control knob.

To use the Slew Limiter section of the 129 /3, you need to have module **A-129 /4** (**Slew Limiter Controller**) as well. It has several dedicated functions, and gives you control over the following slew limiter functions:

- Manual control of the slew rate
- CV control of the slew rate, with an input attenuator
- Choice of three functions: "Follow", "Slew" and "Freeze"
- “Freezing” the output voltages for the duration of a gate

☞ This set of functions is operated by the Slew Limiter Controller, A-129 /4.

Usually, the slew limiter is patched between the CV outputs of the analysis section and the CV inputs of the synthesis section (see chapter 5, User examples).

You can also use module A-129 /3, particularly in combination with A-129 /4, for other purposes. For example, using the A-129 /2 synthesis section, you can make a filterbank.

2. A-129 /3, /4 - Overview

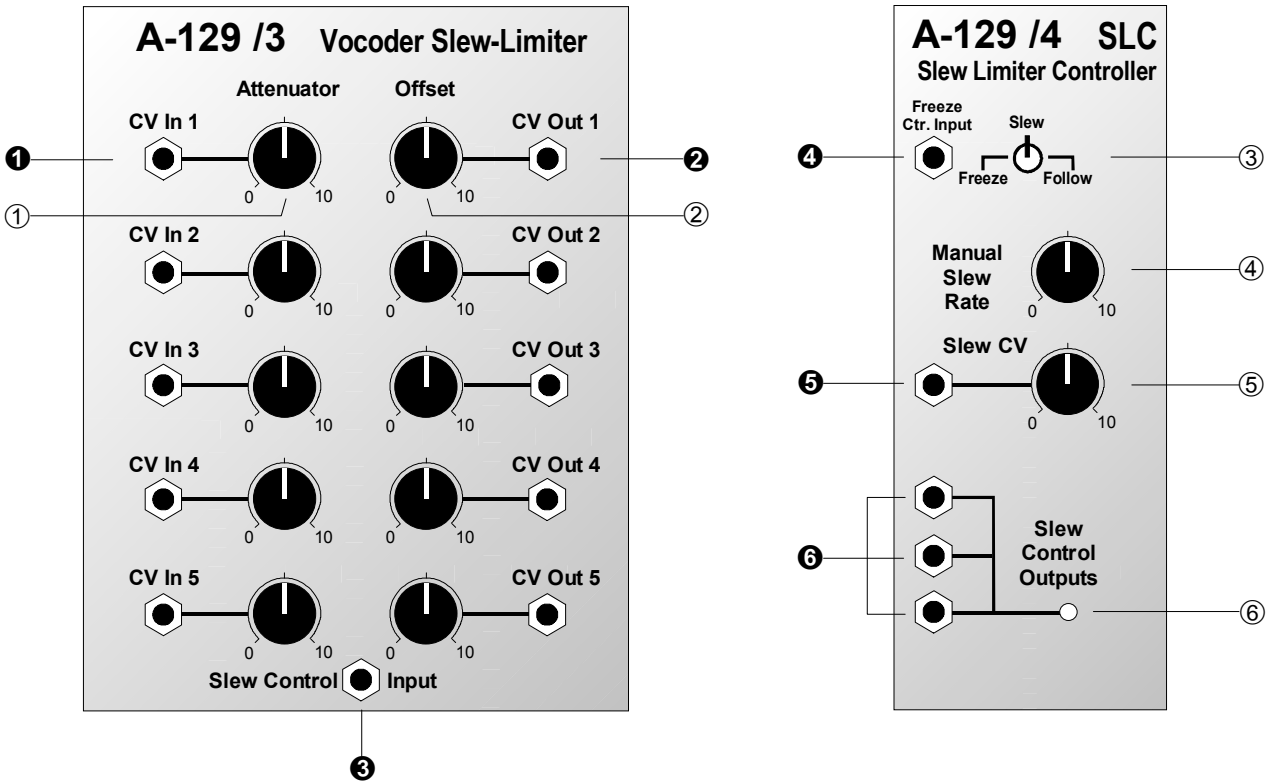

A-129 /3

In- / Outputs:

❶ **CV In 1 ... CV In 5** : CV inputs

❷ **CV Out 1 ... CV Out 5** : CV outputs

❸ **Slew Control Input** : Slew rate CV input; to access the slew limiting capabilities, patch the A-129 /4 output ❻ into it.

Controls:

① **Attenuator** : Attenuator for the CV input

② **Offset** : Offset control for the CV output

A-129 /4

In- / Outputs:

❹ **Freeze Control Input** : Gate input for controlling the freeze function

❺ **Slew CV** : Slew rate control voltage input

❻ **Slew Control Outputs**: 3 internally linked CV out- puts to control slew rate

Controls and indicators:

③ **Switch** : Selector switch (3-position) to choose "Freeze", "Slew", or "Follow"

④ **Manual Slew Rate** : Knob for manual control of the slew rate

⑤ **Slew CV** : Attenuator for output ❺

⑥ **LED** : Indicator showing slew rate

3. Controls and indicators

① Attenuator

Use **Attenuator** ① to lower the signal at the corresponding output ❶. At a setting of 0, the input signal is completely switched off At a setting of 10, the signal amplitude is completely unattenuated.

② Offset

Control ② sets the **offset** which you want to add to the input signal. The offset control range goes from 0 V to +5 V.

③ Switch

Switch ③ lets you **select the mode** in which the slew limiter works (see Fig. 1):

- **Freeze** : The instant you switch to this position, the signal at the output is **'frozen'** - a process similar to what happens with the A-148 Sample & Hold.

- **Slew** : The instant you switch to this position, the **slew limiter function** is selected.

- **Follow** : The instant you switch to this position the output signal **follows** the input signal.

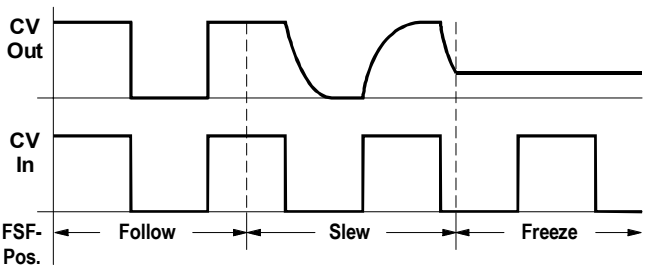

Fig. 1: The three slew limiter functions (Attenuator = 10, Offset = 0)

☞ In the "Slew" position, you can still freeze the signal by sending a gate pulse to input ❹ (see ❹ Freeze Control Input).

④ Manual Slew Rate

This control sets the slew rate of the slew limiter - the steepness of the falling and rising edges of the waveform (see Fig. 2).

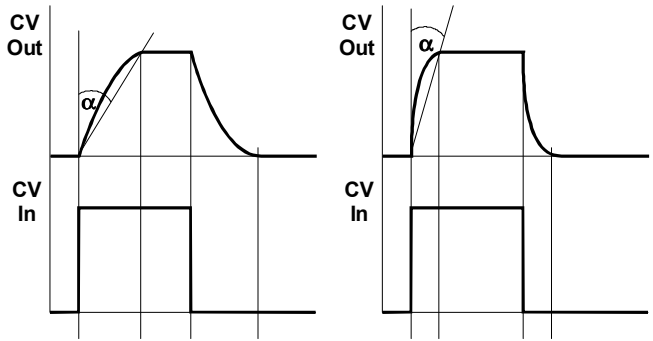

Fig. 2: Slew rate explanatory diagram (Attenuator=10, Offset=0)

With the control set at 0, the output signal is identical to the input.

☞ The precise **slew rate** is decided by a combination of the position of control ④, the control voltage available at input ❺, and the position of attenuator ⑤.

⑤ Slew CV

The **amplitude** of the control voltage at input ❺ is controlled with this attenuator ⑤.

⑥ LED

The LED indicates the mode of the slew limiter signal at output ❻:

- dim : **freeze**
- bright : **follow**

4. In- / Outputs

❶ CV In 1 ... CV In 5

Sockets ❶ are **CV inputs.** This is where you patch in the voltages you would like to modify - ie, attenuate, offset, or smooth out by slew limiting.

❷ CV Out 1 ... CV Out 5

Sockets ❷ are **CV outputs**, at which the modified signals are available.

Each output signal is affected by a **combination of the attenuator, offset and slew limiter functions**.

❸ Slew Control Input

Socket ❸ is the **input** for the CV generated by the A-129 /4 **Slew Limiter Controller**.

This input should be connected with output ❻ on the A-129 /4.

This is a specialised control signal which must come from the A-129 /4. Connecting signals from other modules won't make sense.

❹ Freeze Control Input

A gate signal at **input ❹** freezes the slew limiter's output signal (see Fig. 3).

☞ This function is only active when the switch ③ is in the 'slew' position.

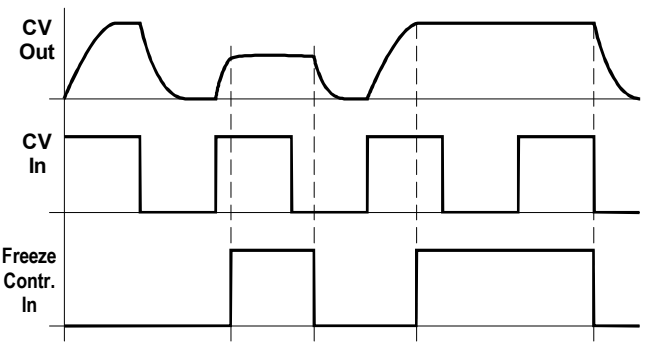

Fig. 3: Using a gate signal to freeze a voltage

❺ Slew CV

Input ❺ is where the CV should be patched in to control the slew rate. The amplitude of the CV can be set with the attenuator ⑤ if required.

❻ Slew Control Outputs

Sockets ❻ are the slew limiter controller's outputs. They're internally connected (a sort of mini-multiple), and are designed to provide the control voltage to the **A-129 /3**.

Connect one of the outputs to an A-129 /3 control input.

5. User examples

Basic layout

Fig. 4 shows the standard layout for using the A-129 /3 and A-129 /4. The A-129 /3 is inserted into the control voltage chain, sandwiched between the analysis and synthesis sections.

For total control of a 15-band vocoder, you need three A-129 /3 modules. It's quite possible to control the slew limiter function of these three with one Slew Limiter Controller A-129 /4. There's also the option, though, of using up to three, to treat different bands of the vocoder in different ways.

The standard layout in Fig. 4 provides the following control functions:

- CV to control the level of one or more vocoder channels or bands (using the attenuator),
- Smoothing the transition between vowels (slew limiter function),
- Vowel hold (freeze),
- Transposing vocoder channels (offset).

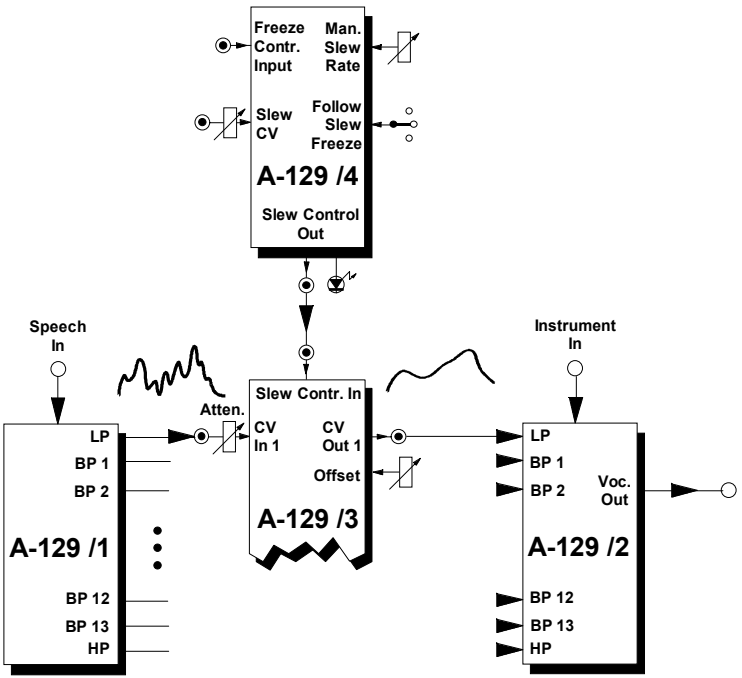

Abb. 4: Basic set-up for the A-129 /3 and A-129 /4

Further adventures in vocoder control

Using the layout in Fig. 4 (and also not forgetting the tips and suggestions for experimentation in the A-129 /1 and A-129 /2 manuals), you should be able to produce all the most widely-used vocoder effects. By patching in other modules, though, you should be able to go 'one step beyond'.

For a start, the voltages for the synthesis section don't have to come from the analysis section. Possible choices for modulation sources from which to control certain channels within the vocoder might include:

- ADSRs (A-140, A-141) for envelope control of timbres
- LFO's (A-145, A-146, A-147) for strange repeated vocal timbres
- Sample-and-hold (A-118) for random vowel sounds
- Shepard-Generator (A-191) for continuous filter effects
- Using an A-191 to control various vocoder channels via MIDI - for instance aftertouch or velocity.

Because as a modular vocoder the A-129 is totally open-ended, it would be wrong to be prescriptive about its use. Better to appeal to your sense of adventure and experimentation. Particularly when you add other modules into the equation, the A-129 should enable you to create some extraordinary sounds.

Especially to begin with, though, don't forget the sound source and signal processing tips and suggestions in the basic vocoder modules' manuals.

A-129 /2 as a filter bank

The vocoder's synthesis section can be used in conjunction with the A-129 /3 as a **filter bank** (see Fig. 5).

The A-129 /3's offset controls govern the intensity of the individual frequency bands within the total audio spectrum (the output of the synthesis section).

You can also create a sort of voltage controlled filter bank by using CVs from a wide range of modules to set or modulate the levels of the frequency bands. See user examples in the basic modules' manuals, and 'Further adventures' in this manual.

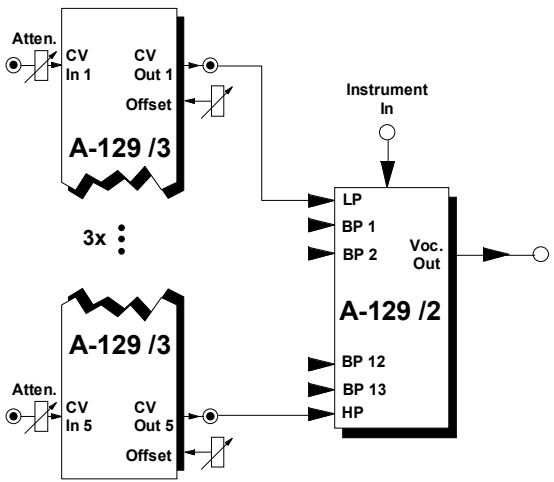

Fig. 5: A-129 /2 and A-129 /3 as a filter bank

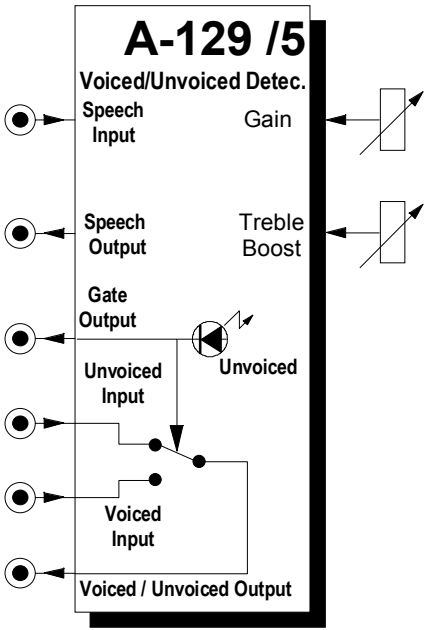

1. Introduction

The **A-129 /x series of modules,** whose essential component parts are the **A-129 /1** (analysis section) and **A-129 /2** (synthesis section), builds into a **modular vocoder**.

Module **A-129 /5** (**Voiced / Unvoiced Detector**) enables the vocoder to distinguish between **voiced** sounds and **unvoiced** sounds - i.e consonants like s, sh, v, f and z - and to **switch between two different carrier signals** to send to the instrument input in module A-129 /2.

Module A-129 /5 has an adjustable **gain control** for the speech signal. There's also an adjustable **treble boost** control, to help speech intelligibility where desired.

A **gate output** with associated LED indicator (whose brightness is proportional to the amount of unvoiced signal detected) offers further help in the sound-making process.

2. Voiced/Unvoiced Detector overview

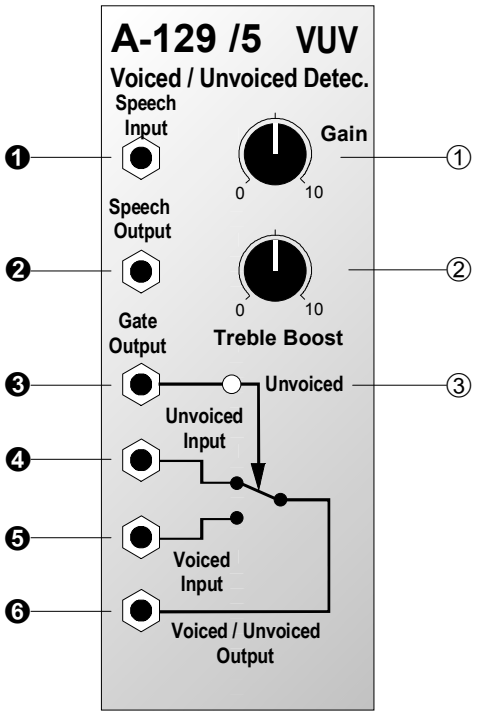

Controls:

① **Gain** : gain control for the speech input signal patched into socket ❶

② **Treble Boost** : control to increase the treble content of the speech input signal

③ **LED** : LED indicator to show the presence and relative strength of the unvoiced signal

In / Outputs:

❶ **Speech Input** : input for speech signal

❷ **Speech Output** : output for speech signal after amplification and treble boost

❸ **Gate Output** : gate output, active during unvoiced sections of the sound

❹ **Unvoiced Input** : input for unvoiced carrier signal

❺ **Voiced Input** : input for voiced carrier signal

❻ **Voiced / Unvoiced Output**: output for the carrier signal: depending on the status of the switching, it sends out the carrier signal present at sockets ❹ or ❺

3. Controls

① Gain

Use control ① to set the level of **input gain** for the speech signal at socket ❶.

② Treble Boost

Control ② is used to **increase the level of the high frequencies** in the speech signal input. Often, using this control makes speech more easily intelligible.

☞ To produce the best results, please also look at the general instructions (chapter 5) in the manual for the main vocoder modules, A-129 /1 and A-129 /2.

③ LED

This **LED indicator** ③ shows the status of the switching in the voiced / unvoiced detector:

- LED on : "Unvoiced"
- LED off : "Voiced"

4. In / Outputs

❶ Speech Input

The speech signal is patched into **Speech-input ❶**.

❷ Speech Output

Speech output ❷ puts out the amplified and equalised (treble-boosted) speech input signal. This output is patched to the speech input socket on the A-129 /1 analysis module.

❸ Gate Output

Gate output ❸ puts out a gate signal, depending on the status of the voiced/unvoiced detector:

- "Unvoiced" (LED 3 on) : "high"
- "Voiced" (LED 3 off) : "low"

You can use this gate signal for more elaborate sound manipulation (see 5. User examples).

❹ Unvoiced Input

This **unvoiced carrier signal input ❹** is used to patch in the sound source you wish to use for the **carrier signal for unvoiced sounds.**

As a rule, you'd tend to use the output from a noise module (A-117, A-118), a high-frequency sawtooth wave, or the 6 Oscillator output from an A-117 module.

❺ Voiced Input

This **voiced carrier signal input ❺** is used to patch in the sound source you wish to use for the **carrier signal for voiced sounds.**

Usually, you'd tend to find a low-mid frequency VCO or mix of several VCOs doing this job.

❻ Voiced / Unvoiced Output

Depending on the status of the voiced/unvoiced detector switching, **output ❻** relays the input signal from socket ❹ or ❺.

5. User examples

Vocoder block diagram including A-129 /5

The way the A-129/5 should be patched into the whole vocoder system is shown in fig. 2 (see next page).

Smoothing Voiced / Unvoiced transitions

Whereas the A-129/5's internal switch produces an abrupt change from voiced to unvoiced carrier and vice versa, it's possible to patch the gate output to a slew limiter, invert one of the carrier VCAs, and produce a smooth transition.

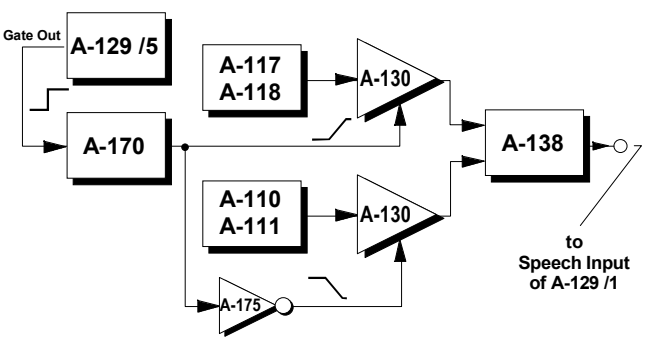

fig. 1: smoothing the change of carrier signals

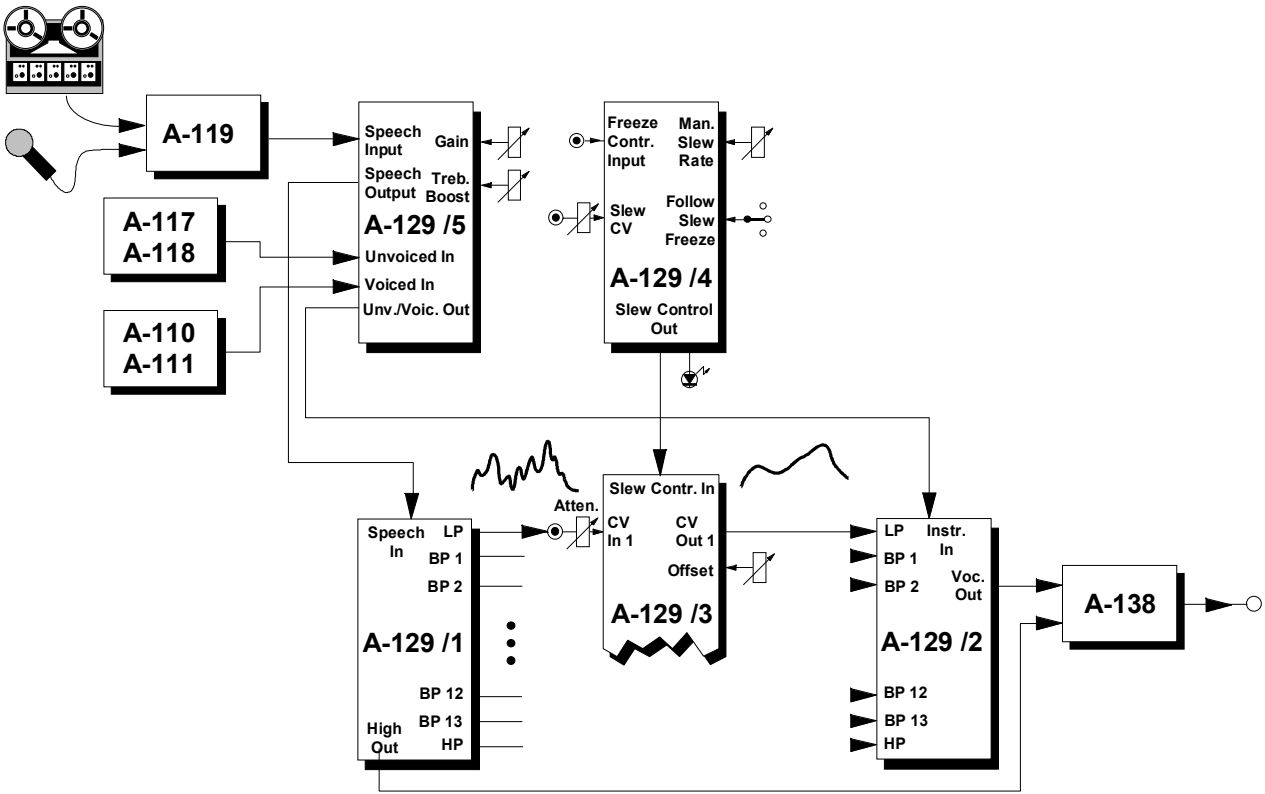

fig. 2: diagram showing how to patch the A-129 /5

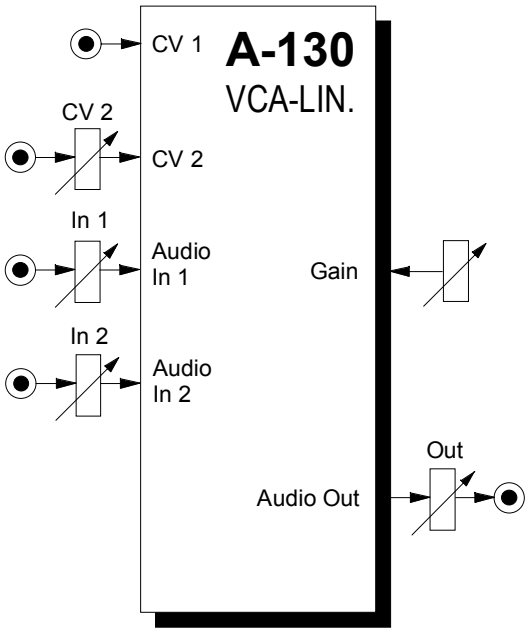

1. Introduction

Modules **A-130 (Linear VCA)** and **A-131 (Exp. VCA)** provide **voltage-controlled amplification**.

☞ This section of the manual applies equally to the **A-130** and **A-131**, because apart from the one difference of their response curves, they are otherwise identical.

For audio signals, you would normally use the exponential VCA (A-131), and for control voltages, the linear VCA (A-130). It doesn't always have to be that way, though.

The amount of amplification the VCAs provide is determined by the voltage at the CV input, and the position of the gain control, which sets the overall gain in the system.

The VCA has **two audio inputs**, each with an attenuator. They are amplified by an amount determined by the combination of the gain and the two CV controls.

2. VCA - overview

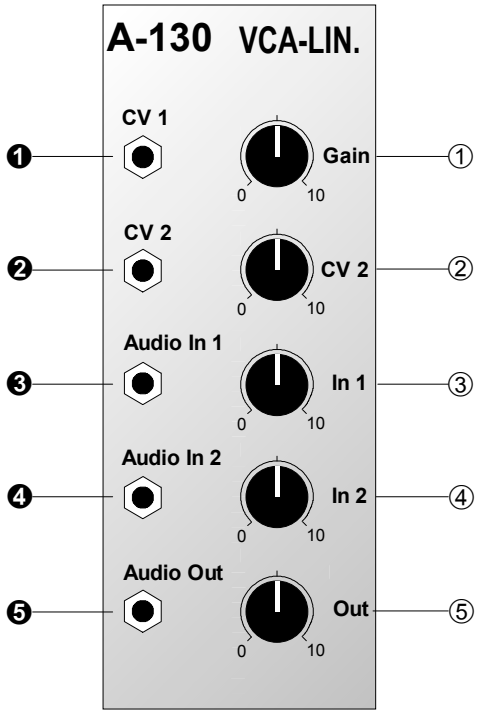

Controls:

① **Gain**: Overall gain control

② **CV 2**: CV attenuator for input ❷

③ **IN 1**: Attenuator for audio input ❸

④ **IN 2**: Attenuator for audio input ❹

⑤ **Out**: Attenuator for the output signal

In / Outputs:

❶ **CV 1**: Control voltage input

❷ **CV 2**: ditto, with attenuator

❸ **Audio In 1**: Audio input

❹ **Audio In 2**: ditto

❺ **Audio Out**: Audio output for the combined audio signals input at ❸ and ❹ and then amplified by the VCA.

3. Controls

The **A-130** has a **linear** response: the amplification is in direct linear proportion to the control voltage input (see Fig. 1).

The **A-131** has an **exponential** (or **logarithmic**) response. That means that control voltage changes have less effect at low levels of amplification than at high levels, and makes the A-131 more sensitive and suitable for subtle changes at low levels (see Fig. 1).

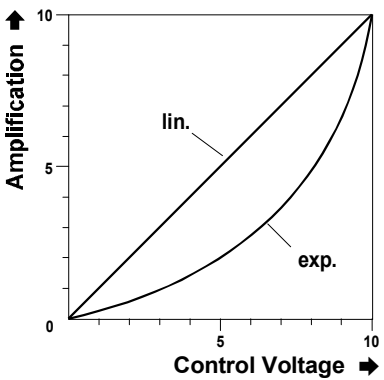

Fig. 1: Response curves for the A-130 and A-131

① Gain

This controls the overall gain of the VCA. At "0", with no control voltage present, there is no amplification at all: no signal is present at the VCA's output. Once the gain control is turned up, amplification occurs, even if there is no CV input present. The gain control shifts the whole VCA response upwards (see Fig. 2).

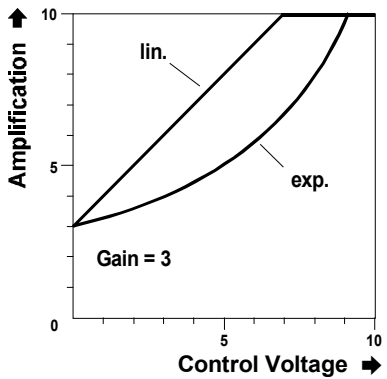

Fig. 2: Effect of gain control on VCA response

☞ Note that if a control voltage is partially negative (for instance an LFO modulating the VCA) you need to set the VCA gain above zero, since otherwise the input signal is only amplified when the modulation CV is positive (see Fig. 3).

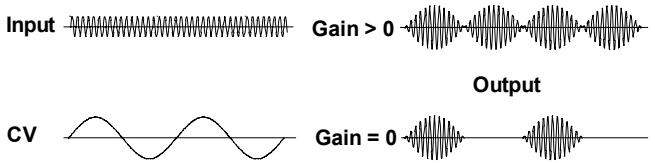

Fig. 3: VCA output level at different gain settings.

② CV 2

This attenuator affects the level of voltage control at socket ❷. It controls the amount of effect the CV has on amplification.

③ IN 1 • ④ IN 2

Attenuators ③ and ④ control the level of the **signals input** into the VCA.

☞ If the output signal **distorts** in an unwanted way, turn down the input level, using control ③ and/or ④.

⑤ Out

This attenuator controls the total volume of the VCA's output.

4. In / Outputs

❶ CV 1 • ❷ CV 2

Sockets ❶ and ❷ are control voltage inputs, whose voltages are combined. The effective range of the VCA goes from 0 V (no amplification) to +5 V (maximum amplification).

❸ Audio In 1 • ❹ Audio In 2

The signals you wish to amplify are input through audio inputs ❸ and/or ❹.

❺ Audio Out

The output signal here is the audio inputs amplified by the VCA..

5. User examples

Typical voltage controlled amplification

A standard VCA patch is shown in Fig. 4. An ADSR envelope produces a time-dependent amplification curve, which can affect any sound source you choose. The curve can be very quick (with a fast envelope) or it can produce long, slow changes in the volume of a sound.

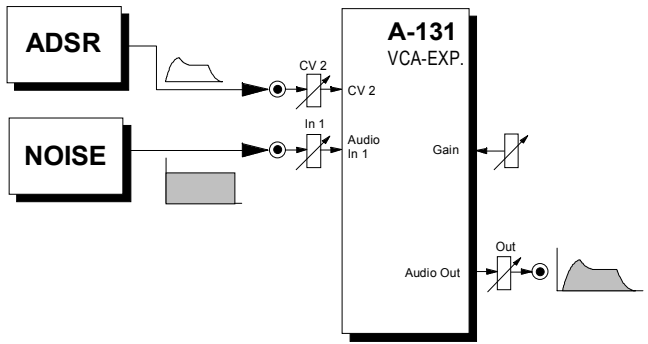

Fig. 4: Time dependent amplification using an ADSR

Amplitude modulation

In Fig. 5, an LFO is modulating an A-130 linear VCA (with Gain > 0), so that the amplification changes cyclically with the LFO's voltage (**Amplitude modulation**/**AM.**) With an LFO frequency in the sub-audio range (1 Hz to around 15 Hz) the result is **Tremolo** (Fig. 5). With a modulation frequency in the audio range, sidebands occur like those produced by FM (Frequency Modulation), and interesting timbres emerge.

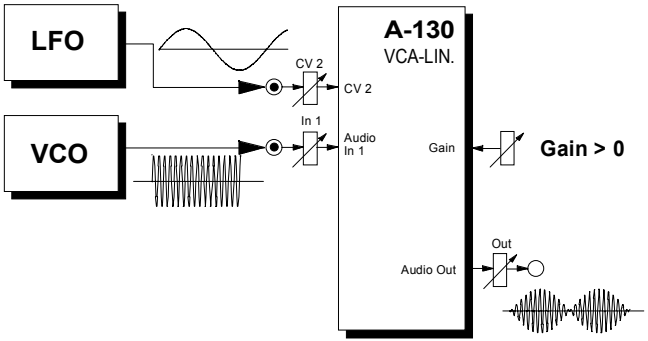

Fig. 5: VCA amplitude modulation with an LFO

Modulation depth is adjusted with control ②.

Fig. 6 shows a way of voltage-controlling this modulation depth using another VCA. In this example, the VCAs have the following functions:

- VCA 1 (A-130): AM control
- VCA 2 (A-131): total volume control
- VCA 3 (A-130): modulation depth control

The voltage control input A to the modulation depth VCA can come from an ADSR, MIDI controller, etc..

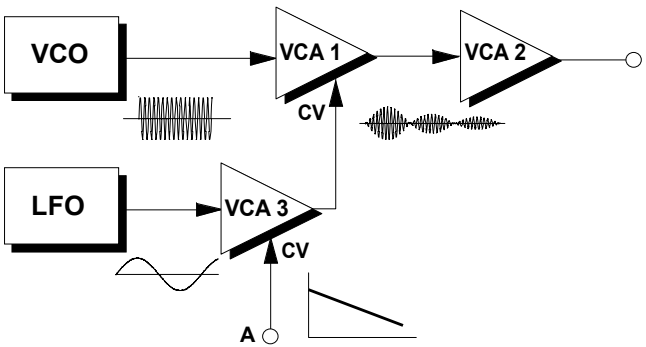

Fig. 6: AM with voltage-controlled modulation depth

Keyboard control of VCA (tracking)

You can use the CV output from a keyboard to modulate the VCA, and so have **level of amplification determined by the pitch** of a note - what's usually called keyboard tracking.
In the example in Fig. 7, high frequency notes are amplified more than low frequency notes. Use control ① on **VCA 2** to vary the degree of keyboard tracking.
To produce the opposite effect (that is, inverse keyboard tracking, where lower sounds are more amplified than higher ones) patch a **Voltage-Inverter A-175** in before VCA 2 (see Fig. 8).

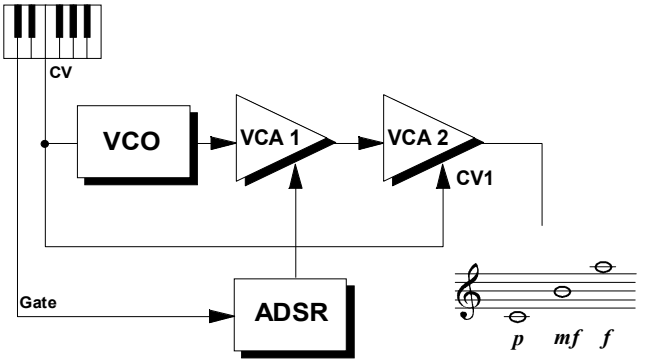

Fig. 7: Keyboard tracking - the higher the pitch, the louder the output

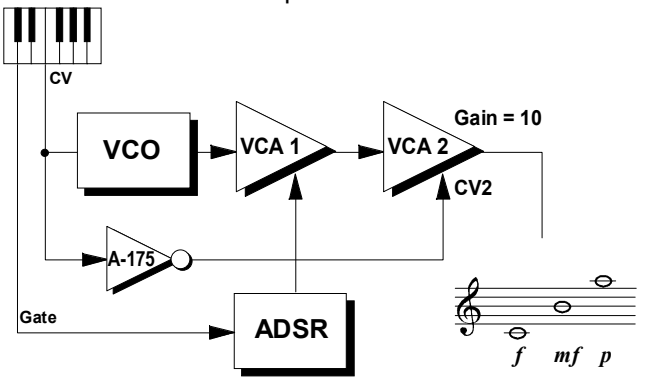

Fig. 8: Inverted keyboard tracking: the higher the pitch, the less amplification.

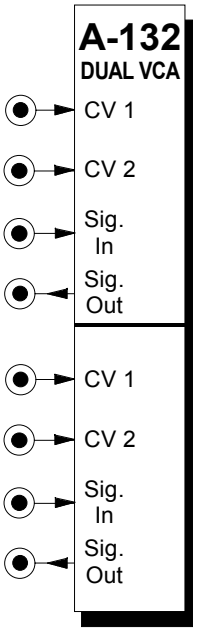

1. Introduction

Module **A-132 (Dual Low Cost VCA)** contains two **voltage controlled amplifiers**, with a linear response most suited to regulating the level of control voltages (ADSR amount, level of vibrato effect, etc.).

In non-critical situations, though, its VCAs can be used to control audio signals - see chapter 4, user examples.

Amplification is governed by the sum of the voltages patched into the two CV inputs.

2. Dual Low Cost VCA - Overview

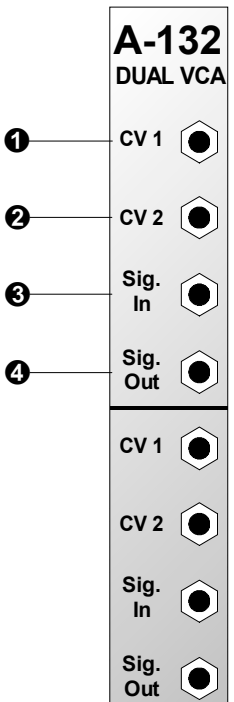

In / Outputs:

- ❶ **CV 1** : Input 1 for amplification CV
- ❷ **CV 2** : Input 2 for amplification CV
- ❸ **Sig. In** : Amplifier input
- ❹ **Sig. Out** : Amplifier output

3. In / Outputs

❶ CV 1 • ❷ CV 2

Sockets ❶ and ❷ are the VCA's **control voltage inputs**. Whatever voltages are patched in here are summed, and determine the amount of **amplification** in the VCA (0 V: zero amplification; 5 V: maximum amplification).

❸ Sig. In

Patch the signal to be controlled by the VCA into input socket ❸.

❹ Sig. Out

The VCA output socket ❹ sends the signal out once it's been amplified by the sum of the control voltages patched into the VCA.

4. User examples

Control of modulation amount by AM

In Fig. 1 an A-132 is added to the patch to make the **amount of modulation** voltage-controlled. Each of the VCAs has the following function in this patch:

- VCA 1 : A-130, control of AM
- VCA 2 : A-131, control of total volume
- VCA 3 : A-132, control of modulation amount

The control voltage for modulation amount (eg. from a MIDI-CV interface) is patched in at point A.

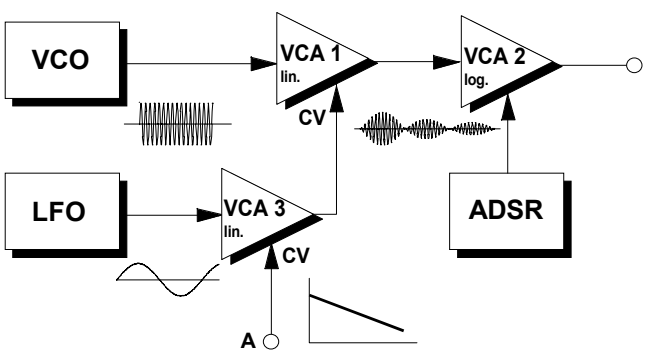

Fig. 1: AM with voltage-controlled modulation amount

MIDI-controlled VCF or VCA envelope amount

One important use of the A-132 is to control a VCF or VCA envelope according to how much velocity CV a MIDI-CV interface is putting out, as in Fig. 2.

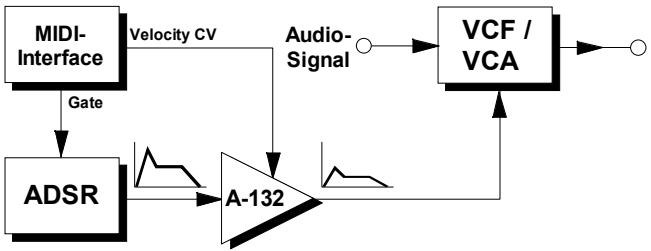

Fig. 2: Controlling the level of a VCF or VCA envelope by the velocity CV output from a MIDI interface.

Audio signal amplitude control

For non-critical applications, the A-132 can also be used for amplifying audio signals.

In the example in Fig. 3, an A-132 is patched in to make the level of noise in an audio signal voltage-controlled. The control voltage **CV_N** could for instance come from the velocity output of a MIDI-CV interface; or from an envelope, for a chiff at the start of each note.

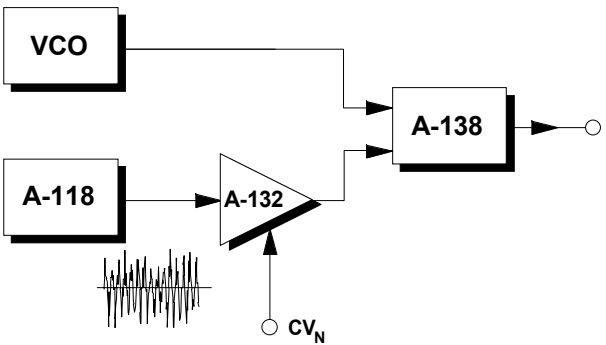

Fig. 3: Audio signal amplitude control

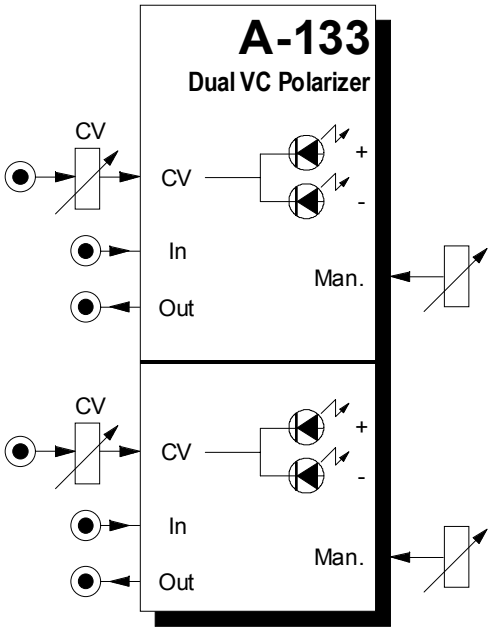

1. Introduction

Module A-133 (**Dual VC Polarizer**) is a **special dual voltage controlled amplifier** that enables both **positive** and **negative amplifications**. Negative amplification means in this context that the signal is **inverted**.

The main application of the module is the **processing of control voltages**, e.g. ADSR or LFO. But even **audio signals** can be processed with this module.

The **amplification range** is about -2.5....0....+2.5. Amplification can be adjusted **manually** (Man control) or by an **external control voltage**.

The present **amplification** is **displayed** with **two LEDs**: one for positive and one for negative amplifications.

2. Overview

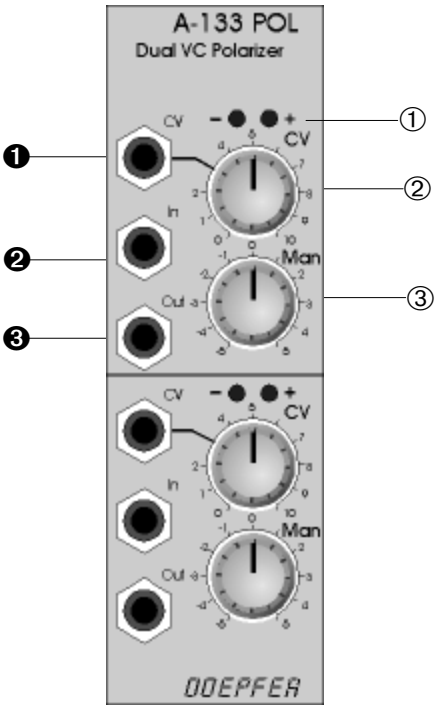

Controls and indicators:

① **LEDs** : negative/positive amplification display (not a signal display !)

② **CV** : attenuator for the control voltage at input ❶ that controls the amplification

③ **Man.** : manual amplification control

In- / Outputs:

❶ **CV** : control voltage input

❷ **In** : signal input

❸ **Out** : signal output

3. Controls and Indicators

① LEDs

The two LEDs **indicate the amplification** of the polarizer in question (**attention:** in contrast to the LED displays of other modules they do not show the signal but the amplification factor !).

Tab. 1 shows the connection between LED display and amplification. At maximum negative amplification (about -2.5, signal inverted !) the left LED lights with maximum brightness. At maximum positive amplification (about +2.5, signal not inverted!) the right LED lights with maximum brightness. With amplification about zero (i.e. no output signal) both LEDs are off.

② CV

The attenuator ② is used to adjust the **effect of the external control voltage** on the amplification.

③ Man.

This control is used to adjust the **amplification manually**. The range is about **-2.5 to +2.5** (without external control voltage). The middle position corresponds to about zero amplification (but in any case the LEDs should be used to find out the current amplification).

Man.	LEDs	a	In	Out
-5	☀ ○	-2,5		
-2	☀ ○	-1		
0	○ ○	0		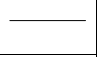
2	○ ☀	1		
5	○ ☀	2.5		

Tab. 1: Connection between manual control (Man.) , LED display, amplification (a) and effect on the output signal

☞ It is possible to obtain other amplification ranges (e.g. -1 ...+1 or -5 ...+5). For this a resistor has to be replaced. Please look at the A-100 service manual or contact hardware@doepfer.de. We think that -2.5...+2.5 is a good compromise as higher amplificati-

ons would cause clipping for all standard A-100 signals (like LFOs, ADSRs or VCOs).

If the **amplification is negative** the signal is inverted (see table above).

The effects of the manual control ③ and the external control voltage ❶ with attenuator ② are added up.

4. In- / Outputs

❶ CV

This jack socket is the **control voltage input** to control the amplification by an external control signal.

❷ In

The signal to be amplified/inverted (control voltage or audio) is fed into this **signal input socket ❷**.

❸ Out

Socket ❸ is the **signal output.**

5. User examples

One application is the **generation of new waveforms.** For this two VCO outputs are connected to the signal and the control input of the A-133 (see fig.1).

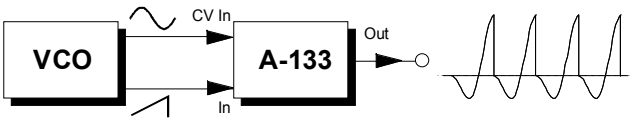

Fig. 1: Generating new waveforms

Same applies for **modulations** (see fig. 2). Instead of LFOs even ADSRs or other CV sources can be used.

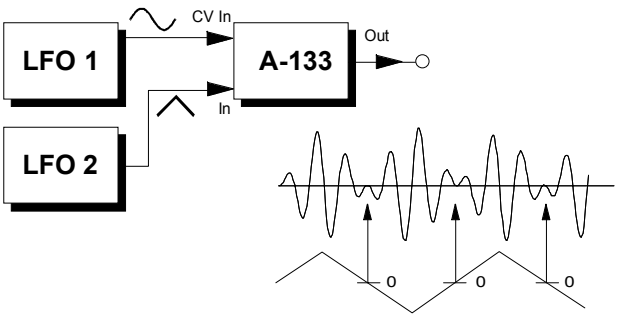

Fig. 2: Control voltage modulation, arrows indicate polarity changes

Additional examples:

- voltage controlled feedback of filters (e.g. A-108), phaser (A-101-3) or spring reverb (A-199)
- polarity change of envelope signals (frequency CV is used to control both filter frequency and polarizer amplification simultaneously)

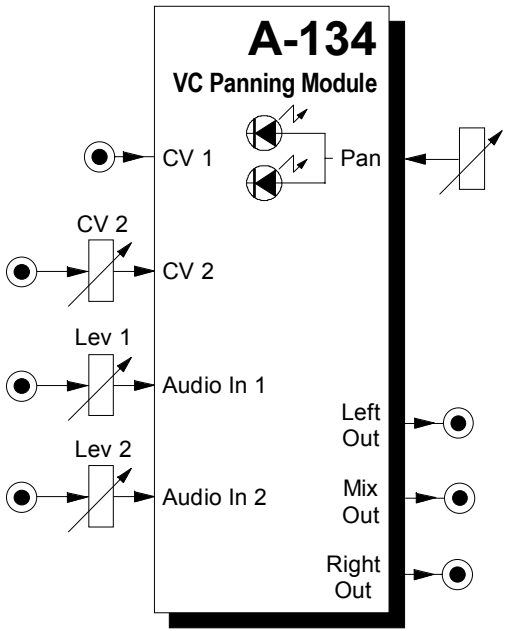

1. Introduction

Module **A-134** (**PAN**) is designed to provide **voltage-controlled panning** for audio signals.

It can equally well pan **between inputs** (with two inputs going to one output) and **between outputs -** one input going to two outputs.

As well as the manual mode, panning can also be voltage-controlled. Two CV inputs (one with an attenuator control are included for that purpose.

Two **LEDs** give a visual indication of what's happening to the signals.

To set the incoming audio signals at the right level, both Audio Inputs have **attenuators**.

2. PAN - Overview

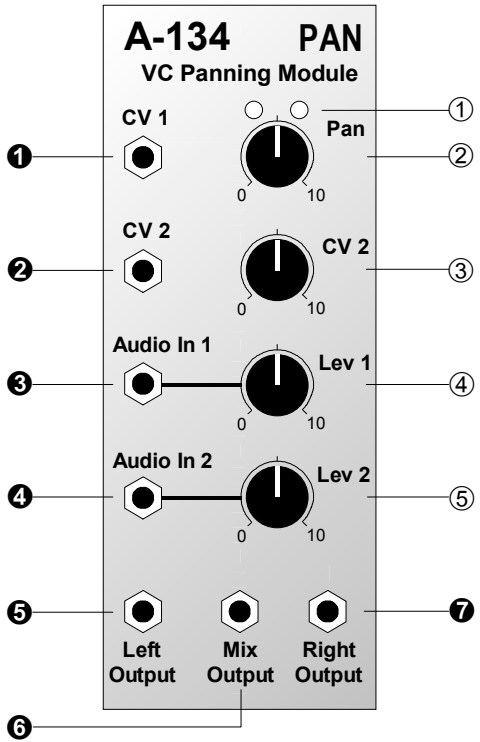

Controls and indicators:

① **LEDs** : status indicators for audio output
② **Pan** : manual panning control
③ **CV 2** : attenuator for the CV at input ❷
④ **Lev 1** : attenuator for audio signal at input ❸
⑤ **Lev 2** : attenuator for audio signal at input ❹

In- / Outputs:

❶ **CV 1** : control voltage input
❷ **CV 2** : ditto, with attenuator ❸
❸ **Audio In 1** : input for first audio signal
❹ **Audio In 2** : input for second audio signal - a switched socket, so that if nothing is connected to it, it is automatically linked to socket ❸
❺ **Left Output** : left audio output
❻ **Mix Output** : mix output
❼ **Right Output**: right audio output

3. Basic layout

The A-134 provides both manual and voltage-controlled panning. It basically contains two matched linear VCAs like the A-130, and a mixer (see fig. 1).

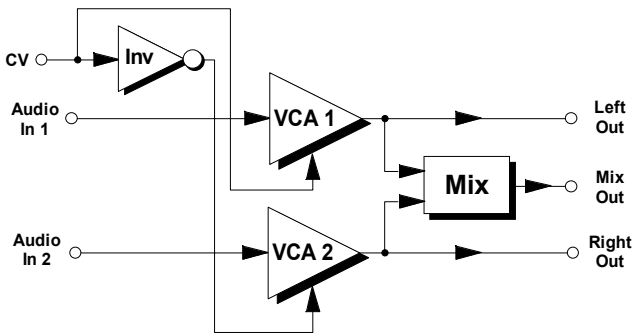

Fig. 1: basic construction

In **input mixing mode,** the signals from the two audio inputs are mixed and sent to Mix Output ❻. By using the two pan controls ② and/or any control voltages connected, you can control the **relative amounts of the two input signals in the mix**. The matched VCAs, with one signal inverted, enable the relative levels of the signals to be controlled automatically.

In **output panning mode,** the signal present at audio input 1 (❸) is sent to the left (❺) and right (❼) audio outputs at levels determined by the pan control ② and/or the control voltage/s input to the module. In this way, you can control the **position of the signal in the stereo soundstage**.

A typical application is to make a signal move regularly about in the stereo soundstage. To do this, a slow LFO is connected to CV input ❶ and/or ❷ on the A-134.

4. Controls and indicators

① LEDs

The two LEDs ① **indicate the level of signals** going to outputs ❺, ❻ and ❼; how they do this depends on the mixing / panning mode:

Input mixing mode:

In this mode, the left LED refers to audio input ❸, and the right to audio input ❹. The LEDs show the relative **signal levels** from each of the inputs being sent to Mix output ❻. Table 1 shows the result of differing control voltages or positioning of the Pan control.

Pan	LEDs	Mix Output
0		Just the signal from Audio In 1
5	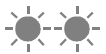	Equal amounts of signal from Audio In 1 and Audio In 2
10	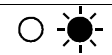	Just the signal from Audio In 2

Table 1: Input mixing mode

Output panning mode:

In this mode, the left LED monitors the left audio output ❺, the right LED the right audio output ❼. The LEDs indicate the relative **position in the stereo soundstage** produced by the two audio outputs. Table 2 shows the result of differing control voltages or positioning of the Pan control.

Pan	LEDs	Left Output	Right Output
0		100 %	0 %
5	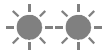	50 %	50 %
10		0 %	100 %

Table 2: Output panning mode

② Pan

Control ② is used to control the **relative signal levels** at outputs ❺, ❻ and ❼. In **input mixing mode,** you control the **relative amounts** of each of the input signal present at the Mix output; in **output panning mode** this determines the **position in the stereo soundstage**.

③ CV 2

Attenuator ③ is used to adjust the **level of control voltage** present at CV input ❷ .

④ Lev 1 • ⑤ Lev 2

The **level of the audio signals** at inputs ❸ and ❹ is controlled by attenuators ④ and ⑤ .

5. In- / Outputs

❶ CV 1 • ❷ CV 2

Inputs ❶ and/or ❷ are for **the control voltages** to be used for voltage-controlled panning.

☞ The actual amount of panning is governed by the sum of the voltages produced by the pan control ② and CV control ③.

❸ Audio In 1 • ❹ Audio In 2

Sockets ❸ and ❹ are the module's **audio inputs.** This is where one or two audio signals are input, with their level controlled by attenuators ④ and ⑤.

☞ **Audio input ❹** is a **switched (normalled) socket.** If there's nothing connected to it, it's automatically linked with input ❸.

❺ Left Output • ❼ Right Output

Sockets ❺ and ❻ are the **left** and **right audio outputs**. These are used in output panning mode.

❻ Mix Output

The **Mix Output ❻** is used in input mixing mode.

6. User examples

There are a whole load of possibilities for using Module A-134, principally because any signal you think of can be used as a control voltage:

- **LFO**
  cyclical changes in output panning;
  depending on the frequency, waveform and amplitude of the LFO, the signal moves from left to right and vice versa.
- **ADSR, VC-ADSR, VCD**
  panning depending on the envelope's voltage.
- **Random-CV**
  random panning;
  fig. 2 shows a patch in which the position of the sound in the stereo soundstage changes with each new note played. The patch in fig. 3 produces an output signal which alter the degree of rasp in the osund with each new key-stroke or sequenced note. (See also the user examples for the A-126)
- **Foot-Controller**
  Foot-controlled panning.
- **Theremin**
  Panning uy using hand-movements (see fig. 4) relative to the theremin's antenna.

- **Sequencer**
  Panning controlled by voltages put out by a sequencer such as the A-155.
  In the patch in fig. 5, the control voltages are produced by the lower row of the A-155, so that as the sequence runs, each note is positioned at a different place in the stereo soundstage. (Lessening the abrupt changes between voltages can be achieved by using Post Out 2 on the A-155.)
- **MIDI Interface**
  By patching in a MIDI interface (such as the A-190 or A-191) you can use virtually any MIDI Controller message to control panning (for instance the mixing two signals using Aftertouch).

  You can also use the pitch information generated by the MIDI interface to control any aspect you want - for instance voltage-controlled panning using pitch data, perhaps making lower notes appear more on the left of the soundstage, and higher notes on the right.

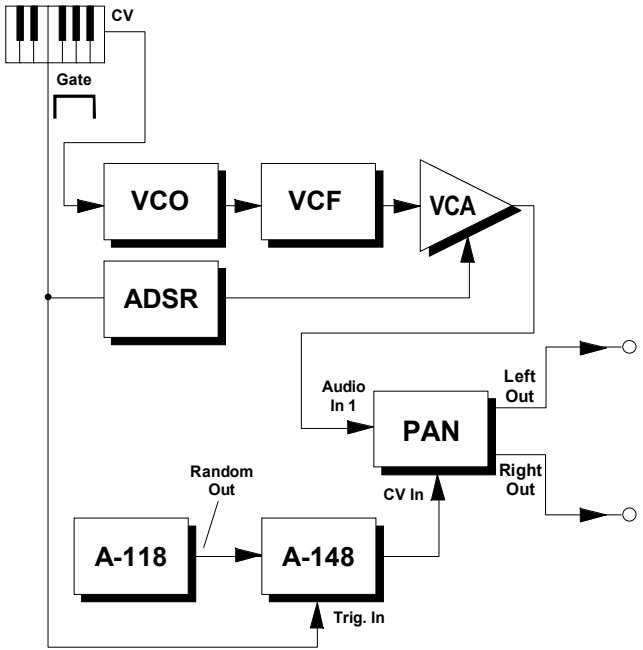

Fig. 2: Random position in the stereo soundstage each time a key is pressed.

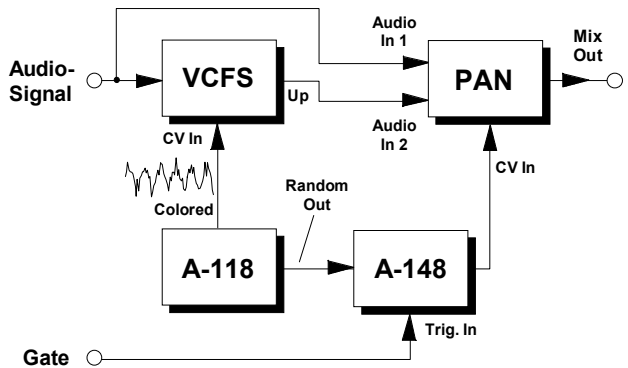

Fig. 3: Randomly making a sound more harsh or rasping each time a note is pressed.

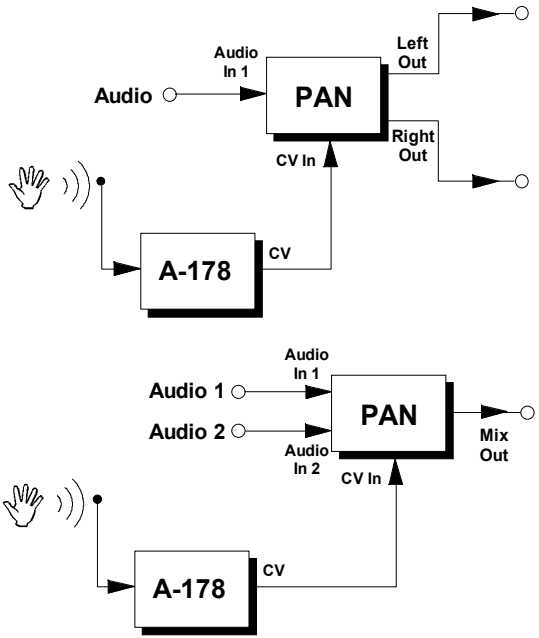

Fig. 4: Panning using the theremin module.

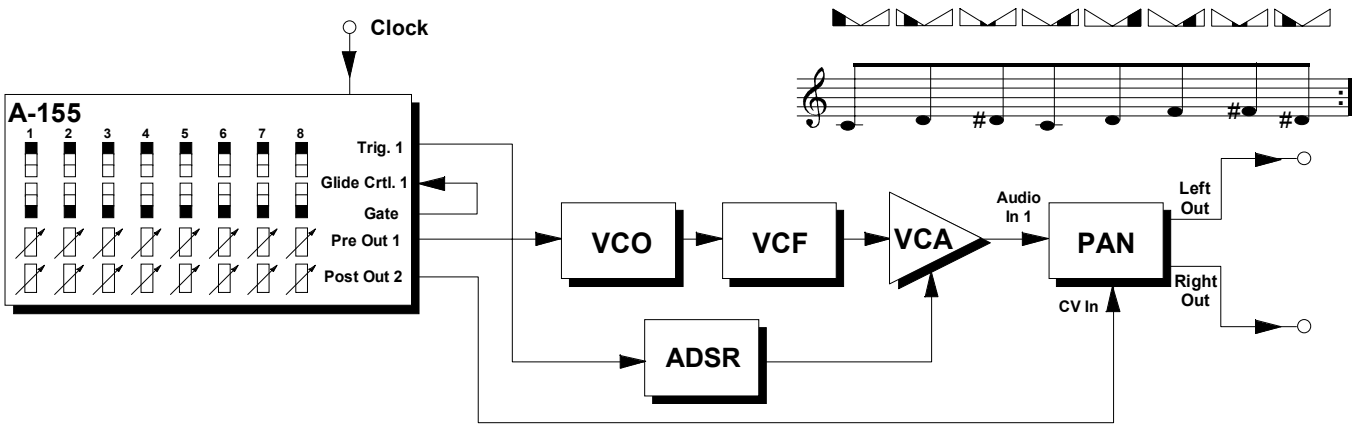

Fig. 5: Output panning using a sequencer.

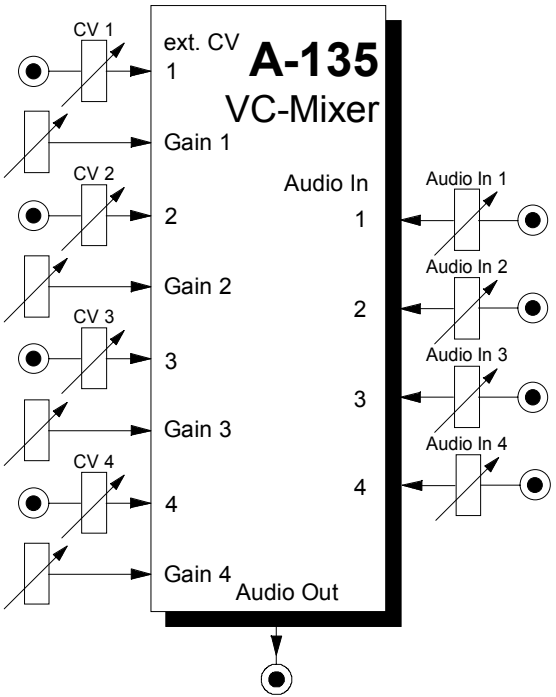

1. Introduction

Module **A-135 (VC-Mixer)** is a **four-channel voltage controlled mixer**, which is used to mix audio signals with four independent voltage controlled levels.

The module consists of 4 linear voltage controlled amplifiers (VCAs) mixed to one common output. High quality integrated VCAs (CEM3381) are used in the circuit.

Each VCA has the following:

- **Audio input** with **attenuator**
- **Control voltage input** with **attenuator**
- **Gain control** (amplification offset).

2. VC-Mix - Overview

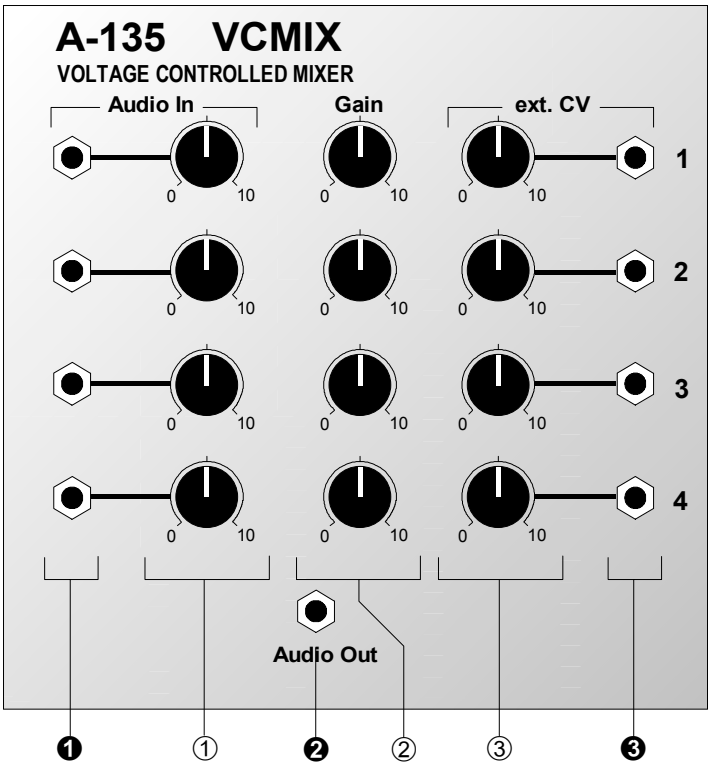

Controls:

① **Audio In** : Attenuator for audio signal at input ❶

② **Gain** : Control for amplification offset

③ **ext. CV** : Attenuator for control voltage at input ❸

In / Outputs:

❶ **Audio In** : Audio input

❷ **Audio Out** : Audio output (mixed output of the four VCAs)

❸ **CV 2** : Control voltage input

3. Controls

① Audio In

The four attenuators ① control the levels of the audio inputs. Adjust these controls to the desired **input levels of the audio signals** at the inputs ❶. Basically these controls serve to compensate for different audio levels in the original signals so that the same control voltage results in approximately the same audio level at the output.

② Gain

The gain control adjusts the **amplification offset** (overall gain) for the VCA in question.

Position "0" corresponds to no amplification offset. This means that the channel in question contributes no signal to the output - provided that no positive control voltage is applied to the external control voltage input.

Turning up the gain control increases the amplification proportional to the gain control setting - even if no voltage is applied to the external control voltage input.

With the gain control, amplification response is shifted up into the positive range (see Fig. 1).

The VCA's used in the **A-135** (CEM3381) have a **linear** control response. The amplification is in direct linear proportion to the control voltage input.

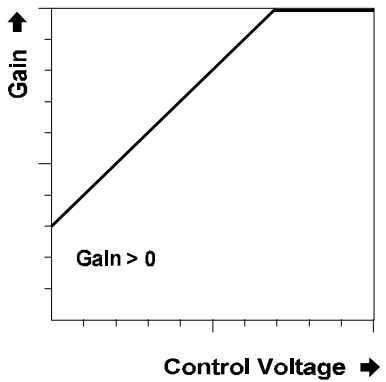

Fig. 1: Effect of gain control on VCA response

☞ For pure **positive control voltages** (e.g. from an ADSR) the **gain control** is normally set to 0. For **bipolar control voltages** (i.e. positive and negative components, e.g. from LFO or random) the **gain control** is normally set to a value larger than 0 so that the negative part of the control signal is able to have an effect as well (see. Fig.2).

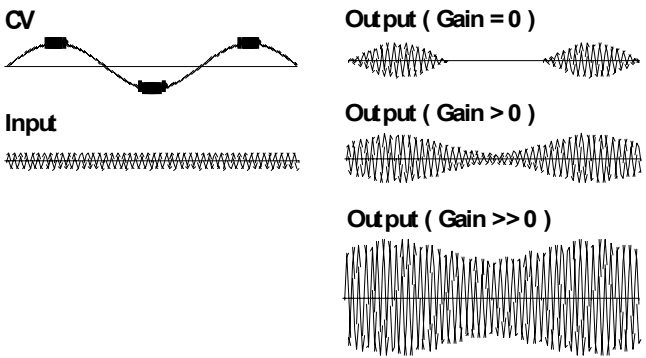

Fig. 2: Resulting amplification with bipolar control voltage (CV) and different gain settings

③ ext. CV

This **attenuator** affects the **level of voltage control** at socket ❷. It controls the amount of effect the CV has on amplification.

4. In / Outputs

❶ Audio In

The signals you wish to amplify are input through the four audio inputs ❶.

❷ Audio Out

The output signal ❷ is the sum of the four audio inputs amplified by the four VCAs.

❸ ext. CV

Sockets ❸ are the control voltage inputs.

The effective control voltage range of each VCA goes from 0 V (no amplification) to about +5 V (maximum amplification). The effective control voltage is the sum of the voltages coming from the gain control ② (about 0...+5V), and the external control voltage ❸ that may be attentuated with control ③.

5. User examples

Module A-135 enables **voltage controlled mixing of up to 4 audio sources** with 4 different control voltages.

The control voltages can be generated by any voltage source or even by audio sources for special effects (similar to ring modulator or FM sound). Here are some examples of possible control voltage sources:

- LFOs (A-145, A-146, A-147)
- ADSRs (A-140, A-141, A-142, A-170)
- Random (A-118, A-148)
- Shepard-Generator (A-191)
- external audio signals in combination with an envelope follower (A-119)
- Analog sequencer (A-155, MAQ16/3)
- Theremins (A-178)
- Light controls (A-179)
- Foot controls (A-177)

It is also possible to use MIDI-controlled voltages in combination with a MIDI-CV-Interface (A-190, A-191, MCV4, MCV24):

- Pitch CV
- After touch
- Pitch bend
- Modulation
- Volume
- any MIDI Controller

For example, the combination of A-135 and A-191 can create a simple MIDI-controlled mixer.

One special application is using the **Morphing Controller A-144** to generate the control voltages for the A-135. This enables cross-fading (morphing) of 4 audio sources with only one controlling voltage. This single controlling voltage defines the fading or morphing position. For details refer to the A-144 user's guide.

6. Patch-Sheet

The following diagrams of the module can help you recall your own **Patches**. They're designed so that a complete 19" rack of modules will fit onto an A4 sheet of paper.

Photocopy this page, and cut out the pictures of this and your other modules. You can then stick them onto another piece of paper, and create a diagram of your own system.

Make multiple copies of your composite diagram, and use them for remembering good patches and set-ups.



- Draw in patchleads with colored pens.
- Draw or write control settings in the little white circles.

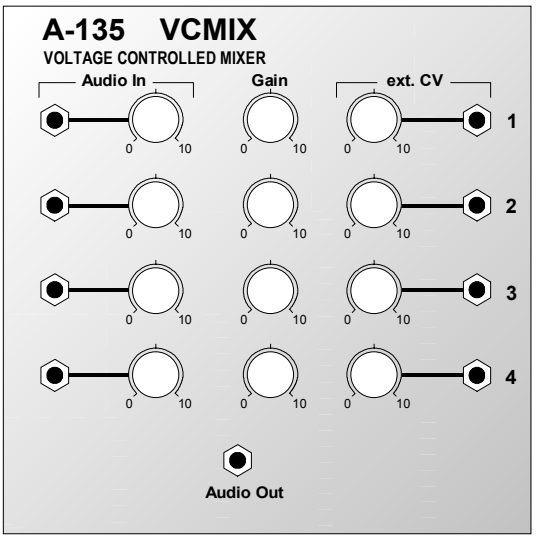

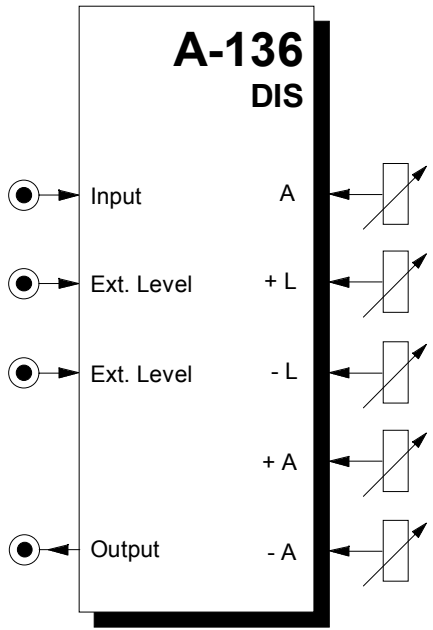

1. Introduction

Module **A-136** is a **distortion** and **waveshaping** module with extensive control possibilities. Different settings of 5 distortion/waveshaping parameters enable a lot of very complex and extreme waveform modifications.

The incoming audio or cv signal is divided into 3 sections: original, positive and negative component. For the positive and negative component, clipping levels (L) are defined. Only voltages beyond this level effect the output signal. For each of the three sections the positive or negative amplification (A) can be adjusted.

External control voltages can be used to alter both clipping levels so that dynamic waveform changes are possible.

The range of modification goes from simple soft or hard clipping to completely altered waveforms where the original signal is no longer recognizable.

Typical applications are audio distortion, and waveform modification for audio signals as well as for control voltages (LFO, ADSR, random etc.).

2. DIS - Overview

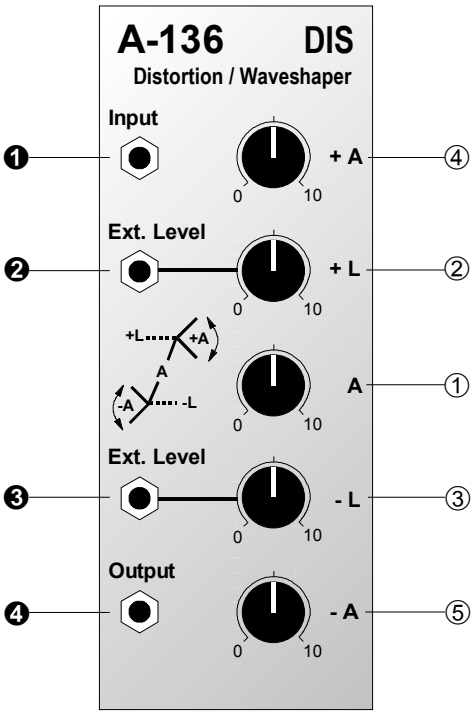

Controls:

① **A** : Amplification control for original signal

② **+ L** : Clipping control for positive signal component

③ **- L** : Clipping control for negative signal component

④ **+ A** : Amplification control for positive signal component (above the positive clipping level)

⑤ **- A** : Amplification control for negative signal component (below the negative clipping level)

In / Outputs:

❶ **Input** : Signal input

❷ **Ext. Level** : ext. CV input for positive clipping level

❸ **Ext. Level** : ext. CV input for negative clipping level

❹ **Output** : Signal output

3. Controls

① A

Control ① defines the **amplification A** of the original signal. The range of the amplification factor is about -4...+4. This means that one can obtain actual amplification (range +1...+4), or attenuation (range 0...+1) or even inversion of the original signal (range -4...0). The table below shows the approximate assignment of some control settings and the corresponding amplification factors:

Control setting	Amplification factor	Explanation
0	about -4	maximum negative amplification
3,5	about -1	same amplitude as input signal but inverted
5	about 0	suppression of input signal
6,5	about 1	same amplitude as input signal
10	about 4	maximum positive amplification

Tab. 1: How control settings affect amplification factors

② + L • ③ - L

Controls ② and ③ adjust the **positive** (+L) and **negative** (-L) **clipping levels** respectively.

In the positive signal section only signal voltages above the positive clipping level +L are affected by the amplification control +A.

In the negative signal section only signal voltages below the negative clipping level -L are affected by the amplification control -A.

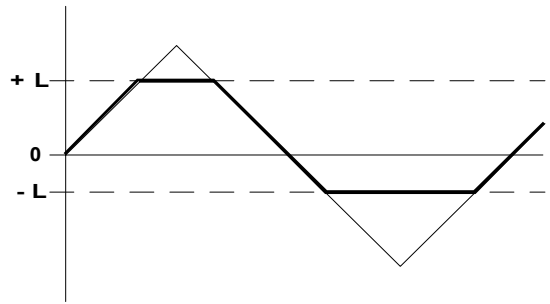

Fig. 1: how the clipping levels work (input signal = triangle)

☞ When an external control voltage is patched to the normalled socket ❷ (or ❸ respectively) control +L (or -L respectively) has no function. In this case the clipping level is determined only by the external control voltage. This feature enables the dynamic change of clipping levels by external control voltage sources.

④ + A • ⑤ - A

With controls ④ and ⑤ respectively, the **amplification** factors of the **positive (+A) and negative (-A) parts of the signal** past the corresponding clipping level thresholds are adjusted. The assignment of control positions to amplification factors is the same as for the original amplification control A (refer to tab. 1).

4. In / Outputs

❶ Input

Socket ❶ is the **signal input** of the A-136.

❷ Ext. Level • ❸ Ext. Level

If you want to control one or both of the clipping levels from external control voltage sources (e.g. LFO, ADSR, Random, Theremin, Sequencer, MIDI, and so on) the normalled sockets ❷ and ❸ are used.

The clipping control +L (or -L respectively) sets the clipping level unless an external control voltage is patched into the **Ext.Level** ❷ socket (or ❸ respectively). Please note that the positive (+A) section of the A-136 takes effect only if the incoming signal voltage is temporarily higher than the positive clipping voltage. For the negative section the same applies: the negative (-A) section of the A-136 takes effect only if the incoming signal voltage is temporarily less than the negative clipping voltage. If unsuitable external control voltages are applied the A-136 may not work properly.

❹ Output

Socket ❹ is the A-136 output.

5. User Examples

Different settings of the 5 parameters enable a lot of **very complex and extreme waveform modifications**. The range of modifications varies from simple soft or hard clipping to completely altered waveforms where the original signal is no longer recognizable. The sketch below shows a few examples when a triangle signal is used as input.

An oscilloscope would be a good tool to see and understand the waveform modifications resulting from different parameter settings.

Typical applications of module A-136 are:

- Audio distortion (especially interesting in combination with filters), whereby the features of the A-136 far exceed those of conventional distortion or fuzz boxes
- Waveform modifications for control signals (e.g. new control waveforms derived from LFO, ADSR, Random and so on)

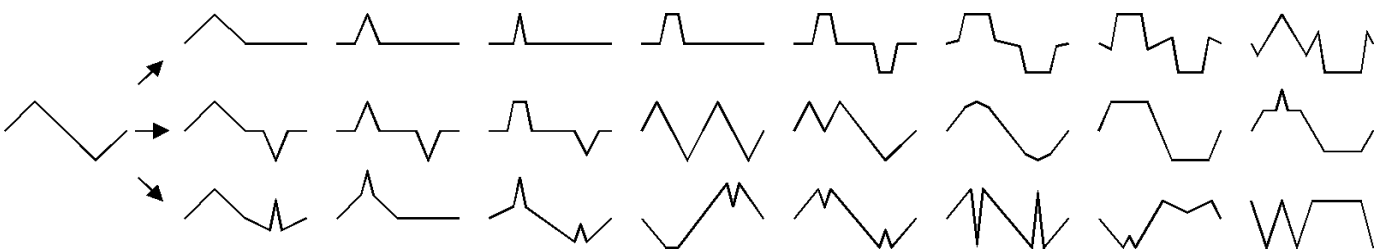

Fig. 2: Examples for new waveforms derived from a triangle input with different parameter settings

6. Patch-Sheet

The following diagrams of the module can help you recall your own **Patches**. They're designed so that a complete 19" rack of modules will fit onto an A4 sheet of paper.

Photocopy this page, and cut out the pictures of this and your other modules. You can then stick them onto another piece of paper, and create a diagram of your own system.

Make multiple copies of your composite diagram, and use them for remembering good patches and set-ups.



- Draw in patchleads with colored pens.
- Draw or write control settings in the little white circles.

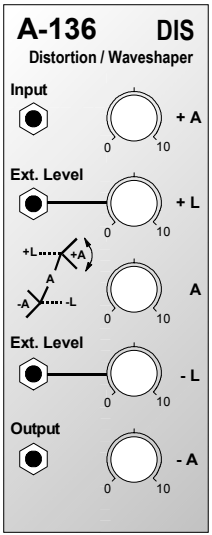

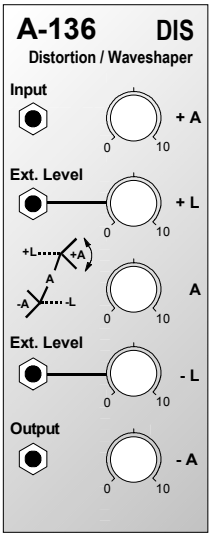

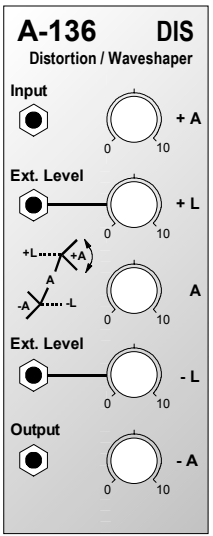



1. Introduction

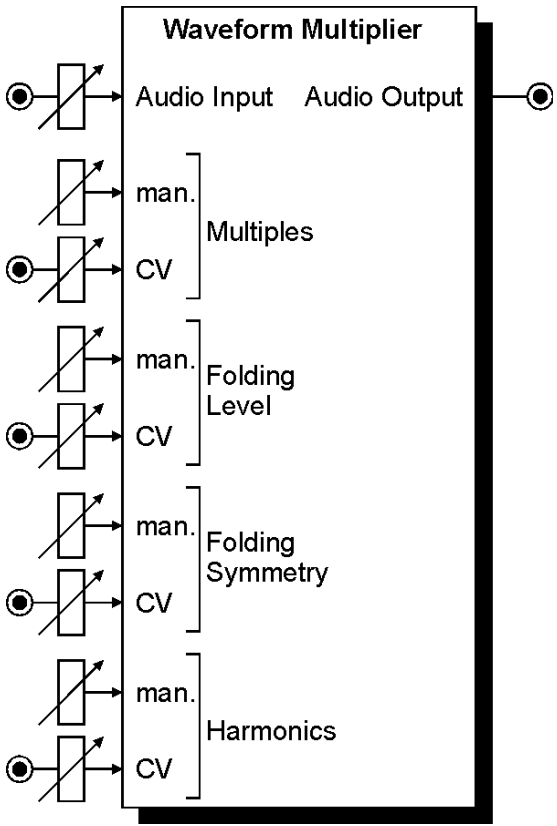

Module A-137 is a **Voltage Controlled Waveform Multiplier**. The basic idea of a wave multiplier is to **multiply the waveform** of an incoming signal (e.g. triangle from a VCO) **within one period**. This leads to **additional harmonics**. The period and consequently the **pitch** of the signals remains **unchanged** - in contrast to frequency multiplication e.g. with the PLL module A-196. The A-137 works as a kind of "***inverse low pass filter***", i.e. it adds a lot of harmonics to the incoming signal. Consequently the best results are obtained with signals that contain none or only a few harmonics (e.g. triangle or sine waveforms). The A-137 can be used with signals rich in harmonics too (e.g. saw) but the effect is not as remarkable as for triangle or sine waves.

The A-137 is a very sophisticated wave multiplier that offers much more features, more controls and more waveform manipulations than other wave multipliers available so far. In addition all **four parameters** are both manually adjusted and **controlled by external voltages**:

- **Multiples:** number of waveform multiplications
- **Harmonics:** adds more harmonics similar to the resonance/emphasis control of filters
- **Folding Level/Symmetry:** value and symmetry of the upper/lower folding level

2. Basic principles

The signal is processed by a standard linear VCA and 4 so-called *wave folding stages*. The amplification of the VCA is identical with the *Multiples* parameter. This is the working principle of the folding stages: As soon as the signal goes beyond the *upper* resp. below the *lower folding level* the signal is *reflected* resp. *folded back*. The values for upper and lower folding level are derived from the input parameters *folding level and symmetry*. Both can be adjusted manually and controlled by an external control voltage (CV). *Folding Level* determines the distance between the upper and lower folding level, *Folding Symmetry* the position of both levels relating to the zero line. The internal upper and lower folding level are calculated by adding resp. subtracting the voltages for *Folding Level* and *Folding Symmetry* (refer to fig. 3).

The working principle of one stage by means of a triangle signal is shown in fig. 1. The upper picture shows the incoming signal. The areas to be reflected are filled black. The lower picture shows the output signal of the stage. In this example the symmetry is slightly positive and the reflected areas are not symmetrical.

Fig. 2 shows the folding function of three stages. The amplification (i.e. the *Multiples* parameter) is increased for the succeeding pictures to see the effect of increasing *Multiples*. Stage 4 is not shown because of clearness.

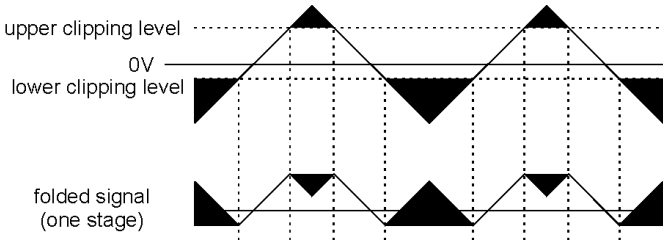

Fig 1: Folding function for one stage

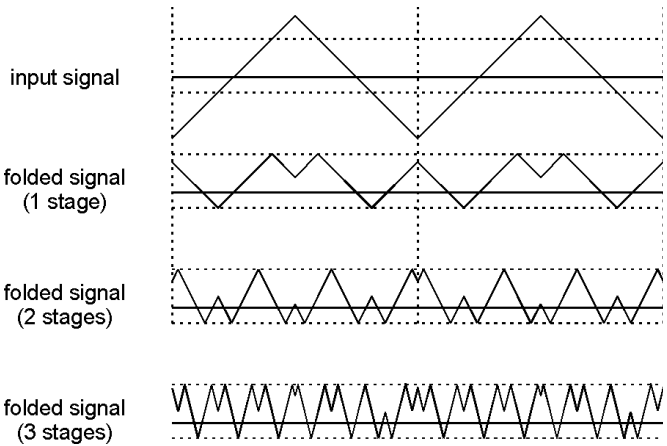

Fig 2: Folding function for three stages

As the amplification resp. the *Multiples* parameter increases even the peaks of the folded signal reach the folding levels of the succeeding stage and the signal is folded once again as shown in fig. 2. As the module contains 4 folding stages up to 8 foldings are possible (4 at the upper and 4 at the lower clipping level). Consequently the maximum multiplication factor is 9 (8+1). If a second A-137 module is added even more multiplications are possible.

The *Harmonics* parameter sharpens the waveform slopes and adds some overshoot at the edges - a little bit like the resonance resp. emphasis function of a filter. Internally the harmonics feature is realized by an additional VCA for each folding stage.

Fig 3 shows the complete schematics of the A-137 module. For each of the four parameters *Multiples, Folding Level, Symmetry* and *Harmonics* a manual control and an external control voltage input with attenuator is available.

The external control of each parameter can be realized with the usual modulation resp. CV sources: LFO, ADSR, random voltage, MIDI-to-CV, Theremin, ribbon controller, joy stick, foot controller and so on. Of course simultaneous control of several parameters with different CV sources is possible (e.g. *Multiples* controlled by and ADSR and *Harmonics* by a LFO).

As the signals within the A-137 are fully DC coupled the module can be used to process control voltages too.

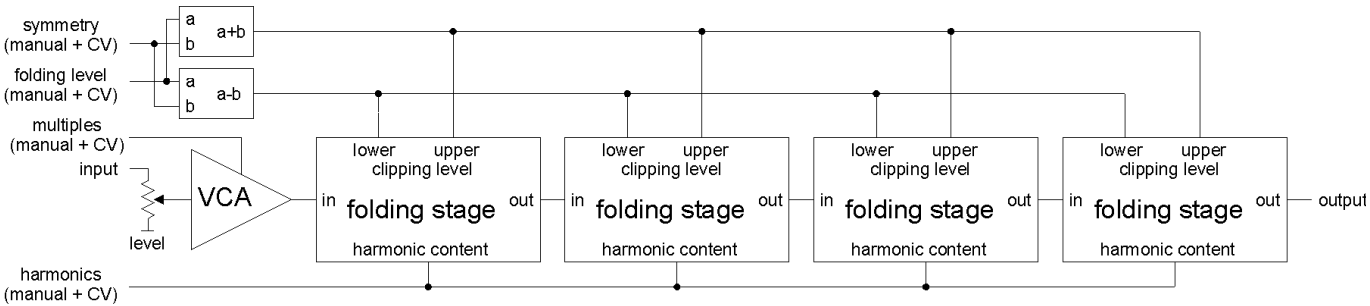

Fig. 3: Overall view

3. Overview

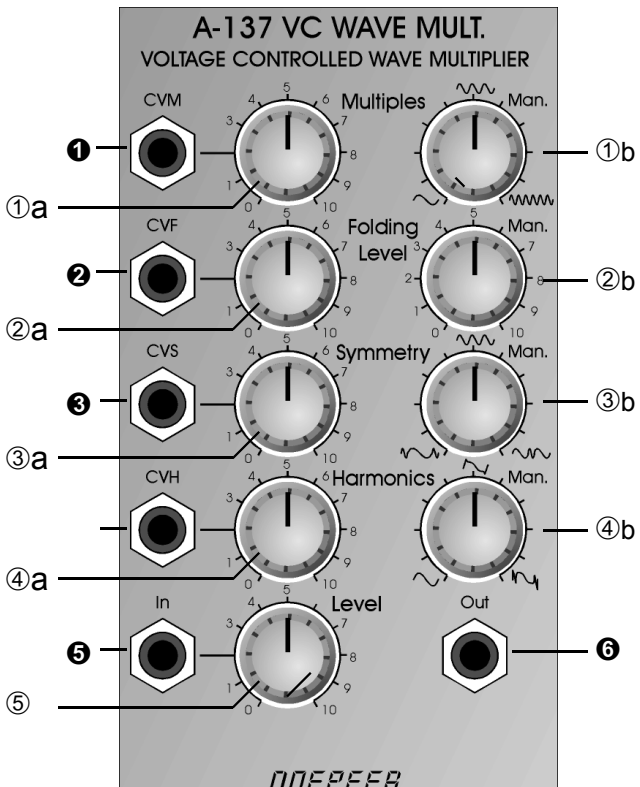

Controls:

①**a CV Multiples**:	Attenuator for CV input ❶
①**b Man. Multiples**:	Manual *Multiples* control
②**a CV Folding Level**:	Attenuator for CV input ❷
②**b Man. Folding Level**:	Manual *Folding Level* control
③**a CV Symmetry**:	Attenuator for CV input ❸
③**b Man. Symmetry**:	Manual *Symmetry* control
④**a CV Harmonics**:	Attenuator for CV input ❹
④**b Harmonics Man.**:	Manual *Harmonics* control
⑤ **Level**:	Input level control

Inputs / Outputs:

❶ **CVM**:	CV input *Multiples*
❷ **CVF**:	CV input *Folding Level*
❸ **CVS**:	CV input *Symmetry*
❹ **CVH**:	CV input *Harmonics*
❺ **In**:	(Audio) input
❻ **Out**:	(Audio) output

4. Controls

①**a CVM** (knob) / ❶ **CVM** (socket)
①**b Manual Multiples** (knob)
This group of elements is responsible for the *Multiples* parameter, i.e. the number of waveform multiplications within one period (range 1...9).

②**a CVF** (knob) / ❷ **CVF** (socket)
②**b Manual Folding Level** (knob)
This group of elements is responsible for the *Folding Level* parameter, i.e. the distance between upper and lower folding level.

③**a CVS** (knob) / ❸ **CVS** (socket)
③**b Manual Symmetry** (knob)
This group of elements is responsible for the *Symmetry* parameter, i.e. the asymmetrical shift of upper and lower folding level relating to the zero level.

④**a CVH** (knob) / ❹ **CVH** (socket)
④**b Manual Harmonics** (knob)
This group of elements is responsible for the *Harmonics* parameter, i.e. the sharpening of the waveform slopes and the addition of overshoot at the edges similar to resonance resp. emphasis function of a filter.

The following is valid for each of the 4 parameter groups:

Each parameter has available a manual control knob (①b/②b/③b/④b) and an external control voltage input (❶/❷/❸/❹). Each external CV input is equipped with an attenuator (①a/②a/③a/④a) that allows to adjust the effect of the external CV to the parameter in question.

The required control voltage difference at the sockets ❶ to ❹ is about 5V to reach all available settings, i.e. about 0...+5V with all attenuators set to it's maximum and all manual controls to it's minimum positions.

⑤ **Level** (knob) / ❺ **In** (socket)

This is the audio input of the module (e.g. triangle output from a VCO) and the corresponding level control. Control ⑤ has the same effect as the *Multiples* parameter as it is connected in series with the VCA that controls the *Multiples.*
Level control ⑤ is adjusted so that the maximum effect is obtained while passing through the complete *Multiples* range (e.g. by turning knob ⑤ from fully counterclockwise to fully clockwise). If the input level is too small not all waveform multiples will be reached. If the level is too high the maximum waveform multiples are reached even for middle positions of control ⑤ and the output signal only distorts for higher settings of control ⑤. But this may be a desired behaviour so that the level control can be set intentionally to higher values.

❻ **Out** (socket)

This is the audio output of the module. The output signal can be processed by other A-100 modules like filters, VCAs, phaser, reverb or a second A-137.

5. User Examples

not yet ready

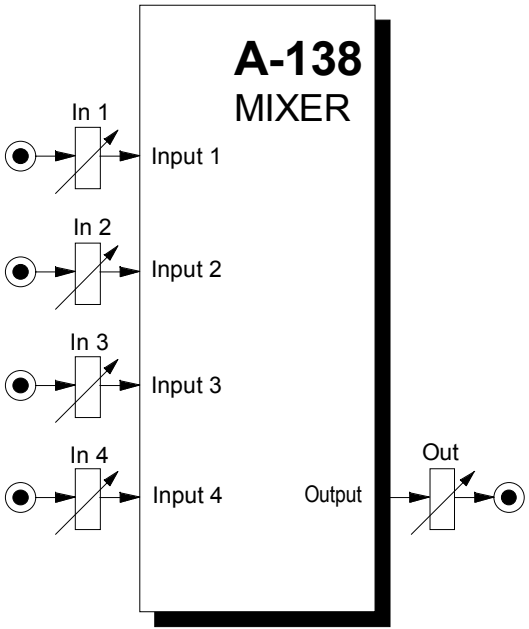

1. Introduction

Module **A-138 (MIXER)** is a **four channel mixer,** which can be used with either control voltages or audio signals.

Each of the four inputs has an attenuator, and there's a master attenuator, so that the mixer can be used at the end of the audio chain - ie. it can be used to interface directly with an external mixer, amplifier, etc..

The module can be supplied in two versions:

- **A-138 a**: potentiometers with linear response, so especially suitable for control voltage mixing.
- **A-138 b**: potentiometers with logarithmic response, so especially suitable for audio signal mixing.

From about middle of 2004 the module is equipped with an additional offset function for input 1. An internal jumper is used to decide if control input 1 works as a positive or negative DC offset generator provided that no plug is inserted into input 1.

2. MIXER - Overview

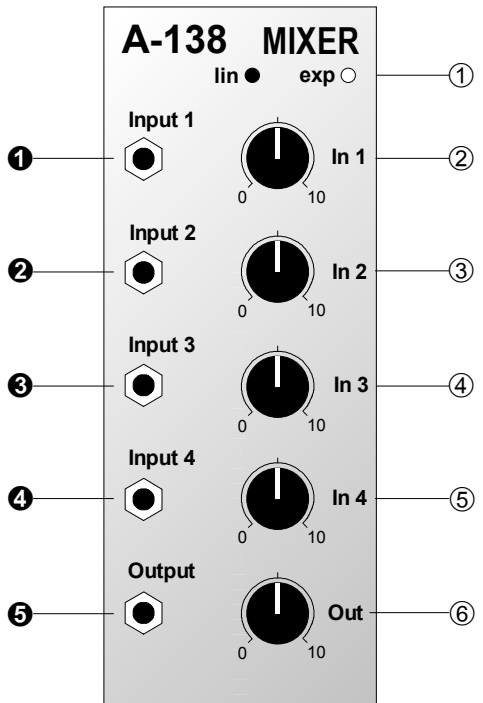

Controls and markings:

① **lin. / exp.**: indication of type of mixer:

A-138 a: **linear** potentiometers
A-138 b: **logarithmic** potentiometers

② **In 1**: Attenuator for input ❶

③ **In 2**: Attenuator for input ❷

④ **In 3**: Attenuator for input ❸

⑤ **In 4**: Attenuator for input ❹

⑥ **Out**: Output attenuator

In / Outputs:

❶ **Input 1**

❷ **Input 2**

❸ **Input 3**

❹ **Input 4**

❺ **Output**

3. Controls and markings

① lin. / exp.

Check which little circle is filled in, to see which version, linear or exponential (logarithmic), the VCA is.

② In 1 ... ⑤ In 4

Attenuators ① to ④ control the level for inputs ❶ to ❹.

⑥ Out

The **output level of the mixer** is controlled by attenuator ⑤. Unlike on most A-100 modules, the output has an attenuator, so that it can act as the end of the audio chain, and interface directly with a mixing desk, amplifier, etc.

From about middle of 2004 the module is equipped with an additional offset function for input 1. The pin header labelled JP4 (located behind input 1 on the pc board) is used for this option. With no jumper on JP4 the offset option is disabled. If a jumper is put to JP4 in the right position (near the edge of the pc board) a positive offset voltage (~ 0...+5V) is generated by control 1 provided that no plug is inserted into socket 1. If a jumper is put to JP4 in the left position (direction to the front panel) a negative offset voltage (~ 0...-5V) is generated.

4. In / Outputs

❶ Input 1 ... ❹ Input 4

Sockets ❶ to ❹ are the mixer's **inputs**. Patch in what you want to mix via these sockets.

☞ You can use the mixer for either control voltages or audio signals (see chapter 5, user examples)

❺ OUT

The mixed signal is available at the **output.**

5. User examples

Mixing audio signals

- ❒ Use **A-138 b,** and patch the audio signals to be mixed into sockets ❶ to ❹.
- ❒ Adjust the relative amount of each signal with controls ① to ④, and the volume of the whole mix with control ⑤.
- ❒ The whole mix is output at socket ❺.

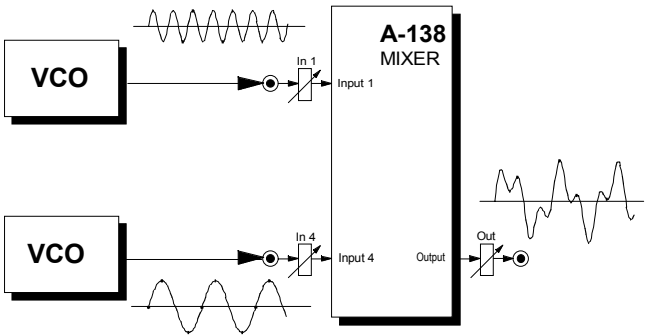

Fig. 1: Mixing audio signals with an A-138 b

Mixing control voltages

You may sometimes need more CV inputs than a particular module has - for instance if you want to control VCF 1 with an **ADSR, LFO, aftertouch,** and **keyboard tracking**.

In that case, you'll need to use an **A-138a VCA** to mix at least two of the CVs, and send the output to one of the VCF's free inputs (see Fig. 2).

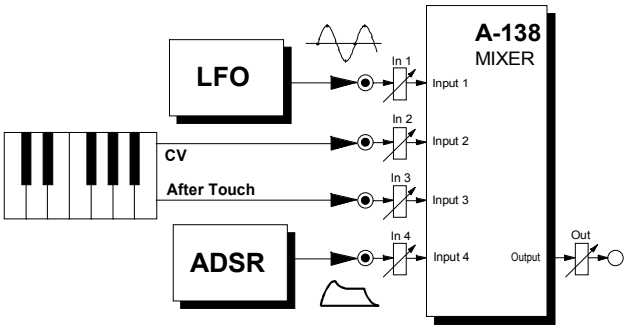

Fig. 2: Mixing control voltages with an A-138 a

1. Introduction

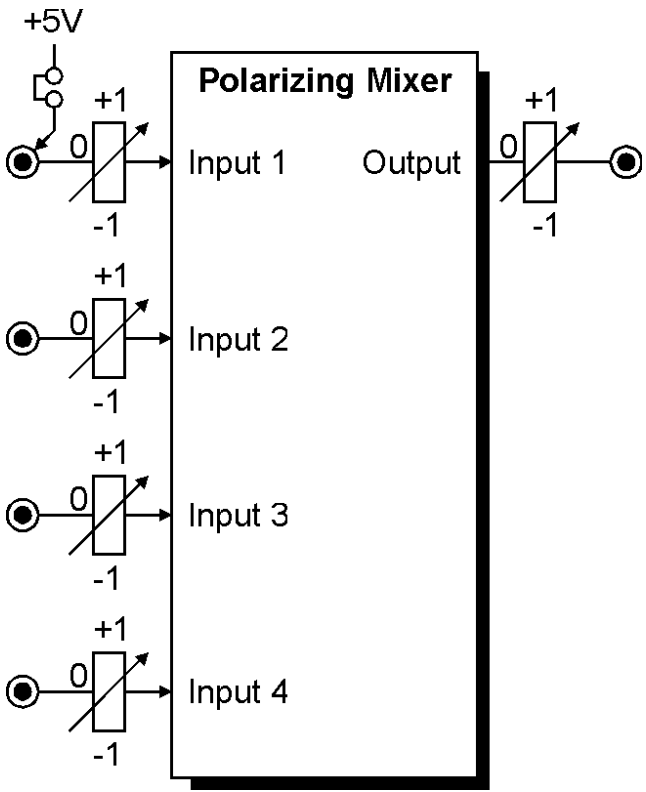

Module A-138c is a **four channel mixer**, that allows to **add or subtract** four incoming voltages to the output signal.

In the **middle position** of the corresponding control knob the amplification is zero, i.e. the signal will be suppressed. Turning the knob **counterclockwise** the signal is **subtracted** from the output sum with increasing amount. Turning the knob **clockwise** the signal is **added** to the output sum with increasing amount.

The **output control** works in the **same way**, i.e. the resulting output signal can be additionally attenuated and/or inverted.

The module is used in the first place to **mix control voltages** (e.g. ADSR, LFO). It can be used to **mix audio signals** too but there is no difference between adding and subtracting audio signals unless they have a **fixed phase relationship** (e.g. the outputs of a VCO, or the input and output signal of a VCF). For audio signals without phase correlation there is no difference between addition and subtraction for the human ear.

Control In1 works as a **DC offset generator** (about -5V...+5V) provided that no patch cord is plugged into socket Input 1. If this feature is not required it can be deactivated by removing a jumper on the pc board.

The **voltage controlled** version of a **polarizer** is the module **A-133**.

2. Overview

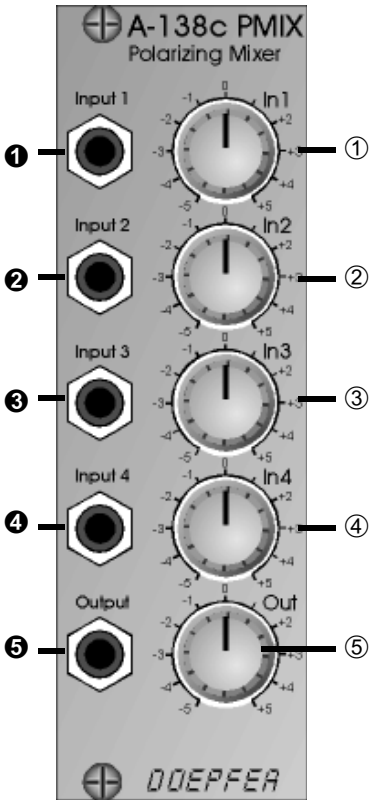

Controls:

①...④ **In1 ... In4** polarizing control input 1 ...4
⑤ **Out** polarizing control output

Inputs / Outputs:

❶...❹ **Input 1 ...4** input 1 ...4
❺ **Output** output

3. Controls / Inputs / Outputs

①...④ **In1 ... In4** (controls)
❶...❹ **Input 1 ... Input 4** (sockets)

These are the four inputs ❶...❹ of the module with the corresponding polarizing controls ①...④. In contrast to a normal attenuator (e.g. the mixer controls A-138 a/b) the zero position of a polarizing control is in the center of the rotating angle. This corresponds to position 5 of a normal attenuator.

Left from the **middle position** (i.e. turning the knob counterclockwise) the corresponding input signal is **subtracted** from the output sum with increasing amount.

Right from the **middle position** (i.e. turning the knob clockwise) the corresponding input signal is **added** to the output sum with increasing amount.

Fig.1 shows the function of a polarizing control by means of an ADSR envelope as input signal. -1 corresponds to the fully counterclockwise position of the control, 0 to middle position and +1 to the fully clockwise position.

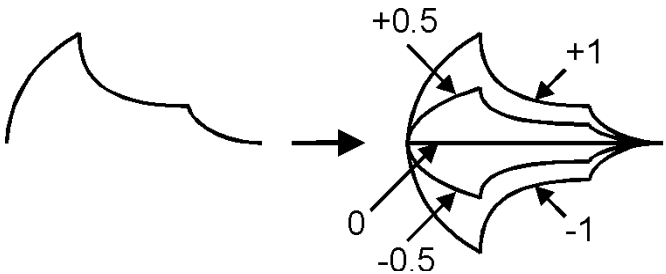

Fig. 1: Function of the polarizing controls

⑤ **Out** (control) / ❺ **Output** (socket)

Socket ❺ is the output of the module with the corresponding polarizing output control ⑤. The output control works in the same way as the input controls, i.e. the output sum appearing at socket ❺ can be additionally attenuated and/or inverted and adjusted to the desired level.

The way of negative/positive control with **zero position** in the **center** of the rotating angle will be a bit unusual in the beginning as one is used to turn a control fully counterclockwise to make a signal disappear. For the polarizing control one has to adjust the knob very carefully to the center position to extinguish a signal. If you want to have an **inverted signal** that can be set to **zero in the usual way** (i.e. fully counterclockwise control position) the **voltage inverter A-175** in combination with a normal attenuator has to be used.

If a **voltage controlled** version of a **polarizer** is required module **A-133** is the solution.

The factory setting for the maximum **amplification** for both the input and output polarizers is **-1 ... +1**. The module can be **modified** to obtain another amplification range (e.g. -0.5 ... +0.5 or -2.5 ... +2.5). Electronically experienced users can do this modification themselves. Simply a resistor has to be replaced to change the maximum amplification (for details please refer to the chapter "module modifications" on DIY page of our web site www.doepfer.com).

Control In1 works as a **DC offset generator** (about -5V...+5V) provided that no patch cord is plugged into socket Input 1. If this feature is not required it can be deactivated by removing a jumper on the pc board. For this a two row pin header with 10 pins (2x5) is located behind input control 2. The upper pair of pins is marked with an arrow and labelled "offset opt.". In the factory a jumper is put on this pair of pins to activate the offset option for input 1. To cancel the offset option the jumper simply has to be removed.

The complete pin header is labelled "ext. Inputs". It can be used to establish default connections from other modules to the switching contacts of the A-138c input sockets, e.g. from the four outputs of a quad modulation modules **A-143**-x, the VCO **A-110** or the multimode filter **A-121**. For this the two modules (A-138c and A-143-x) have to placed side by side and the corresponding connections (outputs of A-143-x to the default inputs of the pin header of A-138c) have to established internally. Such modifications should be carried out only by qualified personnel or electronically experienced users. A female connector with flat cable (similar to the bus cables) should be used for this connection (no direct soldering to the pins).

This is the pin-out of the pin header:

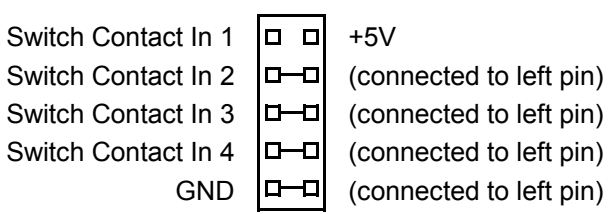

4. User Examples

not yet ready

- general CV input expander (for each CV input) with polarizer function
- new VCO waveforms by mixing the outputs of a VCOs
- new filter types by mixing of filter in and outputs
- positive/negative resonance feedback with inserted modules

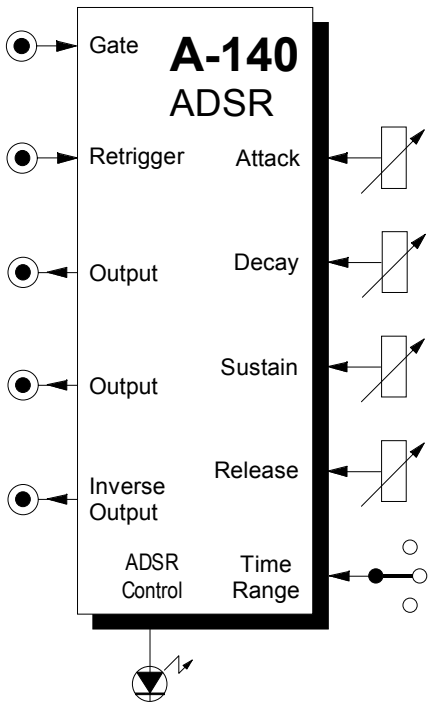

1. Introduction

Module **A-140 (ADSR)** is an **envelope generator**, and, since it puts out control voltages, counts as one of the modulation devices in a modular system.
As soon as the gate input receives sufficient voltage, the ADSR generates a variable voltage, changing in time, called an **envelope**. This varying voltage is output in normal (positive) and inverted form, and can be used, eg., for voltage controlled modulation of a VCO, VCF, or VCA, or for processing other modules' inputs and outputs.

The shape of the envelope is governed by four parameters: **A**ttack, **D**ecay, **S**ustain and **R**elease (see Fig. 1 on page 3).

The envelope is started **(triggered)** by a **gate signal** either from the INT.GATE voltage on the system bus, or, if a signal is put into it, from the gate input socket.

The envelope can also be **re-triggered**, ie. start from scratch again, each time a trigger signal is sensed at the Retrig. input socket, when the gate is still open (see Fig. 2 on page 5).

2. ADSR overview

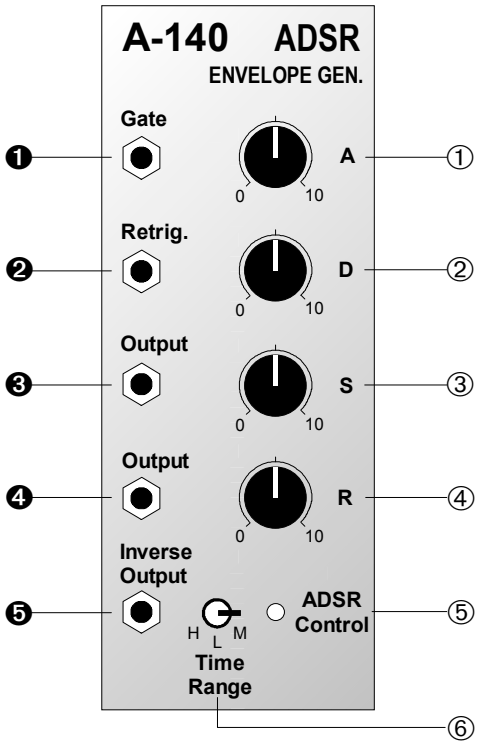

Controls:

① **A**: Attack time control

② **D**: Decay time control

③ **S**: Sustain level control

④ **R**: Release time control

⑤ **ADSR Control**: LED envelope state indicator

⑥ **Time Range**: Three-position range switch

In / Outputs:

❶ **Gate**: Input for gate voltage

❷ **Retrig.**: Input for re-trigger voltage

❸ **Output**: Output: responds to a gate signal by putting out the voltage envelope set by the controls.

❹ **Output**: ditto

❺ **Inverse Output**: responds to a gate signal by putting out an inversion of the voltage envelope set by the controls.

3. Controls

The ADSR puts out a varying voltage, called an envelope, whenever a gate signal is sensed (see Fig. 1).

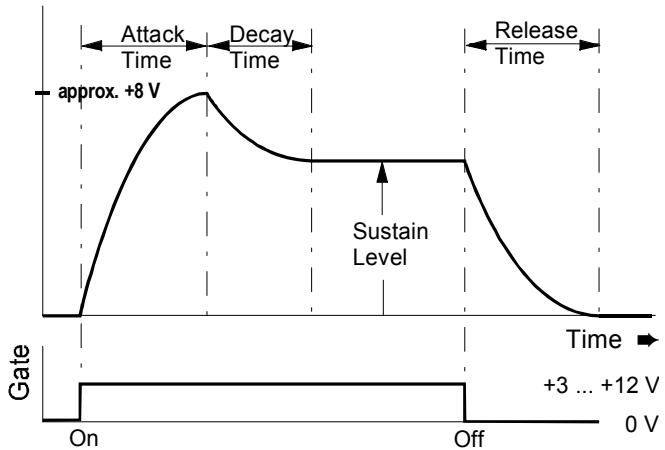

Fig. 1: An ADSR envelope and its parameters

① A

With this control you set the envelope's **attack time**. Whenever the envelope is triggered - via the internal gate, a 'note on' command via a MIDI/CV interface, or a gate signal at gate input ① - a control voltage is output at sockets ③ and ④, rising to maximum in the time set by this control.

② D

This control sets the **decay time**: the time it takes for the control voltage output to fall to the level set by S, the sustain control.

③ S

This control sets the **sustain level** of the envelope - the steady-state voltage level after the decay phase. This level remains the same until the gate is closed.

④ R

This control sets the **release time** of the envelope. As soon as the gate signal finishes, for instance when the key that triggered the envelope is released, or a note off command is received via a MIDI/CV interface, the control voltage falls to zero, at a rate set by this control.

⑤ ADSR Control

LED 5 gives a visual indication of the envelope voltage at the output.

⑥ Time Range

This 3-position rotary switch lets you select the right time range for your requirements. The three positions are:

- **H** (high): up to minutes
- **M** (medium): standard mid-range
- **L** (low): down to less than 100 µsec

4. In / Outputs

❶ Gate

Socket ❶ is the ADSR's gate input.

☞ The gate input is a switched socket, normalled to the **INT. GATE circuit** on the **system bus**. A gate signal on this circuit (for instance from a keyboard) will trigger the ADSR, even without an input to socket ❶.

If on the other hand you connect a gate signal to socket ❶, then the connection with the system bus is broken, and the ADSR is triggered from this socket instead.

If you want, you can undo the normalling to the system bus more permanently, by turning the A-100 off, removing the A-140 module, and taking out the little red **jumper** in the top right-hand corner of the circuit board.

❷ Retrig.

Socket ❷ is the ADSR's **retrigger input**, which can be connected, for instance, to the output from an LFO. That means that *while the gate is open,* the envelope re-triggers every time it senses a pulse from the LFO (see Fig. 2).

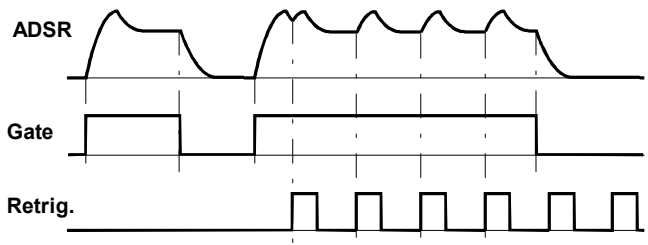

Fig. 2: Envelope re-trigger system

❸ Output • ❹ Output

Whenever the ADSR is triggered, these **outputs** carry the envelope voltage as defined by the Attack, Decay, Sustain and Release parameters (see Fig. 3).

❺ Inverse Output

The Inverse Output carries exactly the same voltage envelope as the ordinary outputs but inverted - with negative instead of positive voltages (see Fig. 3).

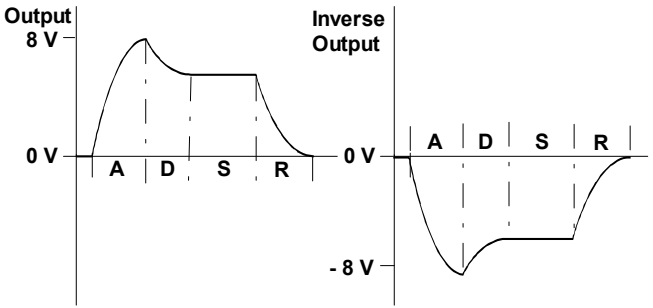

Fig. 3: normal and inverted envelopes

5. User examples

The envelope generated by the ADSR can be used for most kinds of modulation:

- **ADSR - VCA**
  Modulation of loudness / amplification over time.
- **ADSR - VCA for voltage control of any in / output processes**, with the process time controlled by the A, D, S, and R parameters.
- **ADSR - VCF**
  Modulation of the cut-off frequency produces a constantly evolving **sound spectrum**.
- **ADSR - VCO (PWM)**
  Modulation of the pulse width of a VCO produces a constantly changing **timbre**.
- **ADSR - VCO (FM)**
  Modulation of the pitch control voltage produces variation in **pitch** as a note progresses (and at very short envelope settings produces variation of timbre).
- **ADSR - VCP**
  Modulation of the phase shift of an A-125 VCP produces variation in **phase shift** as a note progresses. For this function slow settings of A, D and R parameters should be used.
- **ADSR - VCLFO**
  Control of the frequency of an A-147 VCLFO produces variation in **LFO frequency** as a note progresses. For this function slow settings of A, D and R parameters should be used.

Examples and further notes can be found in the manuals for the individual modules.

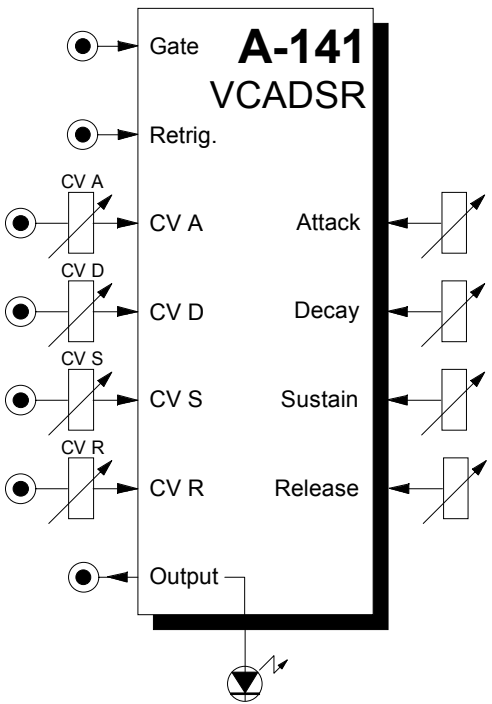

1. Introduction

Module **A-141 (VCADSR)** is a **voltage controlled envelope generator.**

Whenever a **gate signal** is sensed at the VCADSR's **gate input**, an adjustable sequence of voltages is triggered - the **envelope**. You can then use these envelopes to modulate a VCO, VCF and/or VCA, and alter the input and output voltages of all sorts of modules.

The shape of the envelope is governed by four parameters: **A**ttack, **D**ecay, **S**ustain and **R**elease (see Fig. 1 on page 3). On the A-141, these parameters can be controlled **by hand**, or by **voltage control**, via the dedicated CV inputs (each with an attenuator).

The A-141 VCADSR also has a **retrigger facility:** *while the gate is open*, a trigger pulse received at the retrigger socket will **re-start the envelope** from the beginning of its attack phase (see Fig. 2 on page 5).

2. VCADSR - Overview

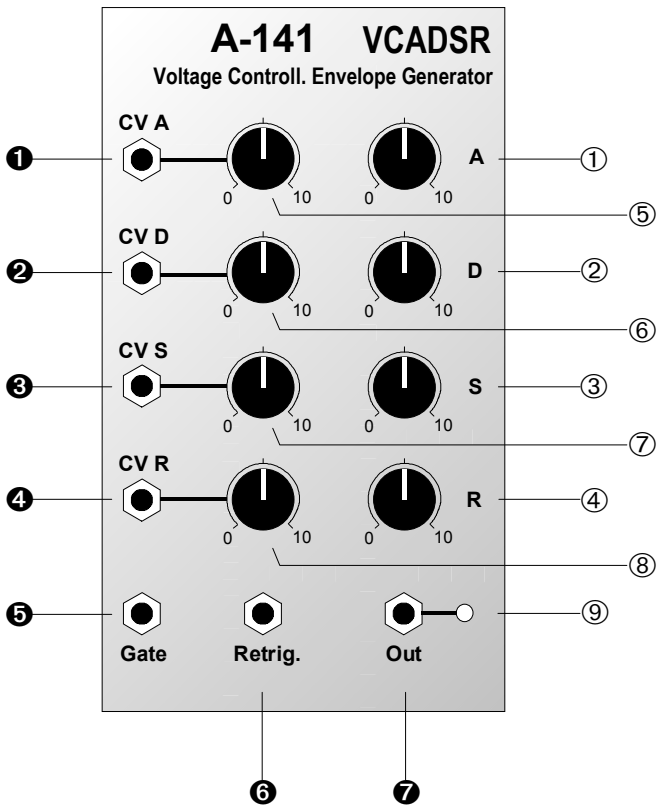

Controls and indicators:

①	**A** :	Attack time control
②	**D** :	Decay time control
③	**S** :	Sustain level control
④	**R** :	Release time control
⑤ ... ⑧	:	Attenuators for CV inputs ❶ to ❹
⑨	**LED** :	Envelope state indicator

In- / Outputs:

❶	**CV A** :	Attack voltage control input
❷	**CV D** :	Decay voltage control input
❸	**CV S** :	Sustain voltage control input
❹	**CV R** :	Release voltage control input
❺	**Gate**:	Gate signal input
❻	**Retrig.**:	Retrigger signal input
❼	**Output**:	Envelope voltage output

3. Controls and indicators

As soon as a **gate signal** is sensed at the VCADSR gate input ⑤, the VCADSR puts out a varying voltage, changing in time, known as an **envelope**. See Fig. 1.

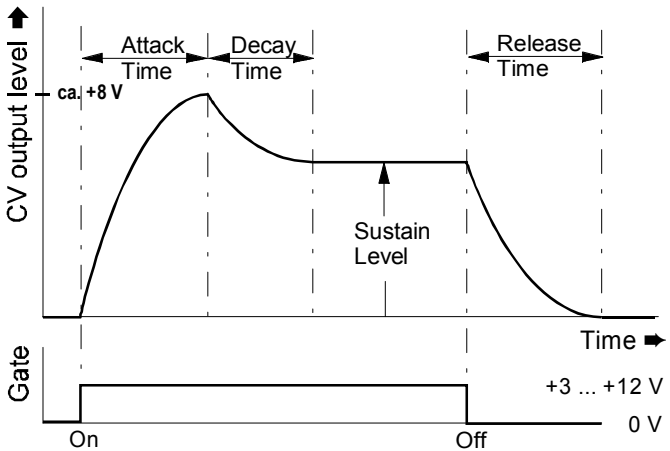

Fig. 1: ADSR envelope and its parameters

The parameters A, D, S and R can be adjusted by hand with controls ① to ④, or can be controlled by the voltages patched into CV inputs ❶ to ❹. These control voltages and the voltages set by hand are summed.

① A

This controls the **Attack time** of the envelope. Whenever the VCADSR is triggered - by a key being pressed on your controller keyboard, or by an external gate being sensed at the gate input ⑤ - the control voltage at output ⑦ rises to the maximum, in a time determined by the setting of this knob, and any voltage patched into its Attack CV input.

② D

This controls the **Decay time** of the envelope. After the attack phase is finished, the voltage falls to the level set by the sustain knob and CV, in a time determined by the setting of this knob, and its CV input.

③ S

This controls the **Sustain level** of the envelope. After the decay phase, the voltage stays at this level until the gate is released.

④ R

This controls the **Release time**. As soon as the gate signal finishes, for instance when the key on the controller keyboard is released (Note Off in MIDI), the voltage at the output falls to its minimum, in a time determined by this knob and the Release CV.

⑤ CV A ... ⑧ CV R

Attenuators ⑤ to ⑧ set the **level of voltage control** for inputs ❶ to ❹.

⑨ LED

The LED indicates the level of the envelope's voltage.

4. In- / Outputs

❶ CV A ... ❹ CV R

CV inputs ❶ to ❹ are where the voltages you want to use to control the envelope parameters are patched.

❺ Gate

Socket ❺ is the VCADSR's **gate input**.

❻ Retrig.

Socket ❻ is the VCADSR's **retrigger input.** This is where you patch in a voltage to re-trigger the envelope. If, for instance, you patch an LFO in, then *while the gate is open,* the envelope is re-triggered every time an LFO pulse is received (see Fig. 2).

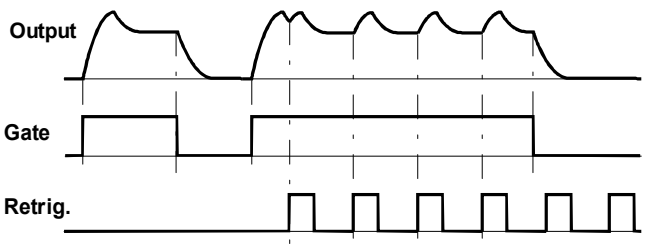

Fig. 2: Envelope re-triggering

❼ Output

Output socket ❼ is where the envelope determined by the A, D, S, and R parameters is available, every time the VCADSR is triggered (see Fig. 1).

5. User examples

Basically, the envelope generated by the VCADSR can be used for any number of types of modulation:

- **VCADSR - VCA**
  Complex amplitude changes over time
- **VCADSR - VCA for voltage control**
  Time-dependent control of all sorts of modulation voltages to and from other modules
- **VCADSR - VCF**
  Modulation of the filter cut-off frequency for constantly evolving **sound spectra**
- **VCADSR - VCO (PWM)**
  Time control of **Pulse Width Modulation** changes for evolving timbres
- **VCADSR - VCO (FM)**
  Pitch modulation as notes progress (and timbral change with very short envelope settings).

Look in the individual manuals for further examples and notes.

The VCADSR in a MIDI system

In contrast with the A-140 standard ADSR, the A-141's parameters can be voltage controlled. One particular possibility is to control the changes in parameters with a MIDI sequencer and MIDI-CV interface (for instance, the A-191) by simply sending **MIDI controller messages**.

That actually makes the **ADSR parameters programmable**, and also means that you can change them as you play, in **real time** (for instance by using velocity to control the Decay parameter).

Using the VCADSR with a sequencer

Used in conjunction with a sequencer like the MAQ 16/3, you can get some interesting results - for instance programming a **different VCF or VCA decay time for each note** in a sequence. You simply connect the second CV output of the MAQ 16/3 to input ❷ (CV D) on the A-141 which is patched into the VCF or VCA.

Controlling the release time

A common VCADSR application is shown in the patch in Fig. 3, where the higher the note played, **the shorter the release time**. This mimics the natural behaviour of most acoustic instruments.

The A-175 Voltage Inverter simply inverts the pitch CV and sends it to the release CV input ❹ (CV R). You control the intensity of this effect with control ⑧.

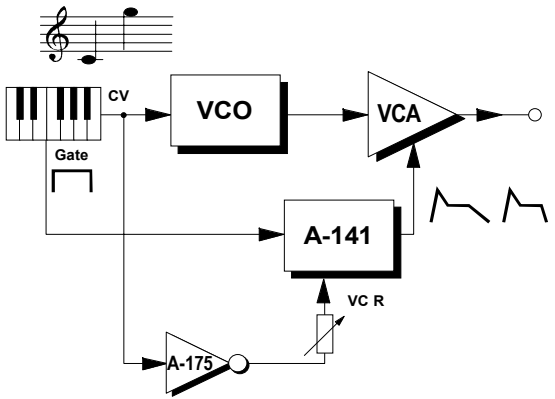

Fig. 3: Controlling release time

The same basic system can be used, eg, to **shorten the attack phase the higher the velocity sensed**; playing hard produces a short attack, and playing more gently a slower attack to the note. Simply patch the relevant velocity output of a MIDI-CV interface, (for instance output CV2 on an A-190) to the A-175 Voltage Inverter's input, and the A-175's output to the CV input ❶ (CV A) of the VCADSR.

Random/cyclical parameter changes

You can get some interesting results by modulating ADSR parameters either **at random**, with the random output from an **A-118 module,** or **cyclically**, by using an LFO such as the **A-145**, **A-146** or **A-147**.

This is where creativity and love of experimentation get to be really important - but one suggestion at least is that the Decay parameter is a good one to start with.

In the patch in Fig. 4, **each new note has a different (random) decay.**

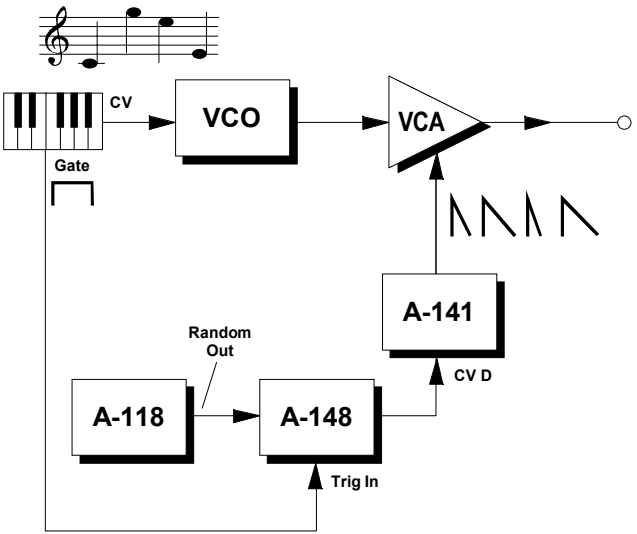

Fig. 4: Random decay with each new note

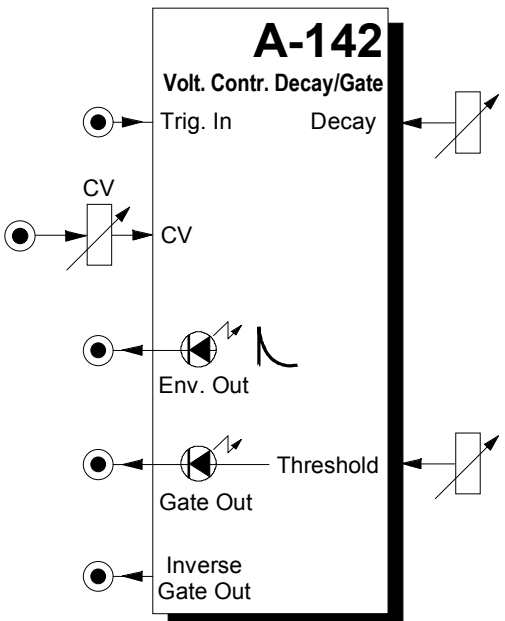

1. Introduction

Module **A-142** (**VCD**) is a dedicated **envelope generator** with just one parameter, **decay time.** This decay time is either controlled manually or by **voltage control.**

Whenever a trigger arrives at the VCD's trigger input, an envelope is generated. This can then be used to control VCO, VCF and VCA modules, or any other module, come to that.

In addition to this, the module produces a gate signal of adjustable length, which can be output in inverted as well as normal polarity.

Two **LEDs** act as indicators of the envelope and gate signals.

2. Overview

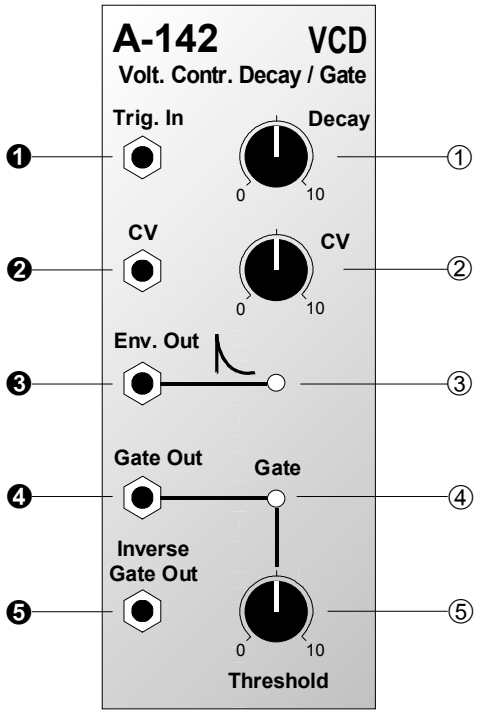

Indicators and controls:

① **Decay** : Manual control for altering the decay time.

② **CV** : Attenuator for control voltages at CV input ❷

③ **LED** : Indicator for the envelope at output ❸

④ **LED** : Indicator for the gate signal at output ❹

⑤ **Threshold** : Control to set the trigger threshold, and thus the length of gate signal output.

In- / Outputs:

❶ **Trig. In** : Input for the trigger signal

❷ **CV** : Control voltage input

❸ **Env. Out** : Envelope output

❹ **Gate Out** : Output for the gate signal generated

❺ **Inv. Gate Out**: ditto, except inverted

3. Controls and indicators

① Decay

This is used for manual control of the **decay time t_D** of the envelope generated. After an extremely short attack phase, the envelope runs from maximum to zero in the time that has been set by this control (see fig. 1).

② CV

Attenuator ② is used to set the **level** of the **control voltage** present at CV input ❷, which in turn controls the length of the decay.

③ LED

LED ③ shows the **voltage level** of the **envelope** being sent to output ❸.

④ LED

LED ④ is the **indicator** for the **gate signal** at output ❹.

⑤ Threshold

Control ⑤ is used for setting the **threshold** which determines the **length of the gate signal** produced.It works like this: the gate signal t_G at output ❹ starts when a trigger is sensed, and stops whenever the envelope voltage falls below the threshold level, which you set with control ⑤ (see fig 1).

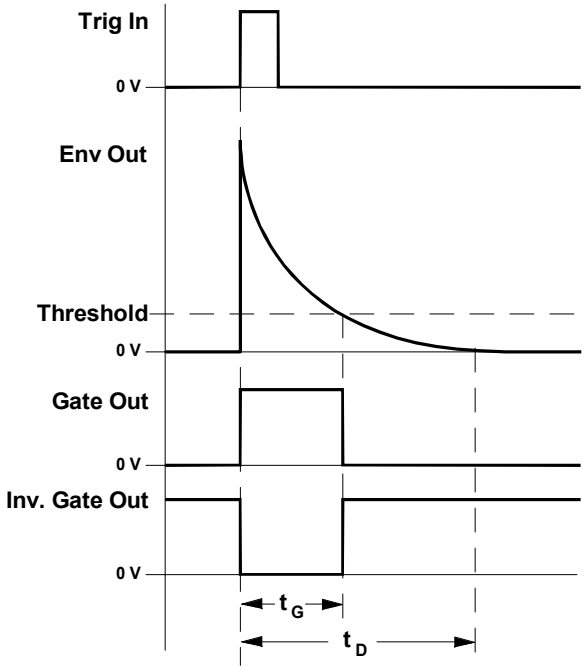

fig. 1: How the A-142 responds to a trigger

Simultaneously, at output ❺ , an **inverted gate signal** is available.

4. In- / Outputs

❶ Trig. In

Socket ❶ is where the **trigger signal** is patched in.

❷ CV

Control voltages for the decay time are patched in here.

☞ The **actual decay time t_D** is determined by a combination of the level of the CVs themselves, and the positions of decay control ① and the CV attenuator ②.

❸ Env. Out

Socket ❸ is the output for the **envelope** that the A-142 produces.

❹ Gate Out • ❺ Inv. Gate Out

The sockets for the **gate output ❹** and **inverted gate output ❺** respectively.

5. User Examples

Since the A-142 is really a simple envelope, with just the one parameter to control, ideas for its use can include any of the occasions on which you might use the decay characteristics of an A-140 ADSR or A-141 VC-ADSR.

Random-Decay

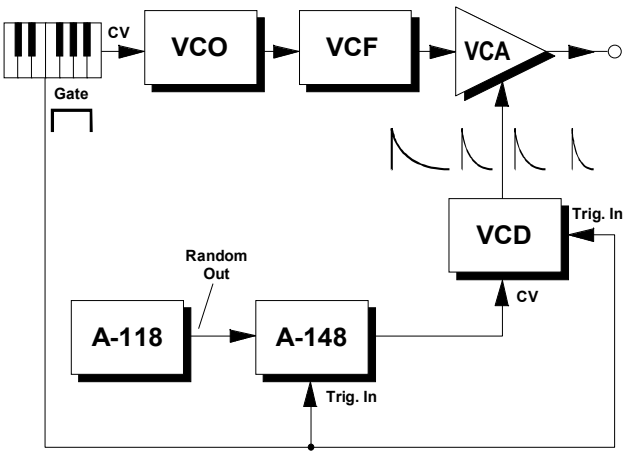

fig. 2: Random-Decay

The patch in fig. 2 produces a random decay effect, so that **each key played has a percussive envelope of**

random length. An interesting variation on this theme is to patch the output into a filter CV input, so that each new note has a different filter accent.

Bringing an analogue sequence alive

The same sort of principle is used in the patch in fig. 3, where a normal note sequence controlled by the A-155 is brought to life by having **different filter accents for each note.**
The upper sequencer row controls the pitch of the note, and the lower row controls the voltages sent to the VCD, and thus the different envelopes for each note.

Voltage-controlled Trigger Delay

In the patch in fig. 4, the gate function of two A-142s is put to good use. By connecting them in series, and using the inverted gate output on the first, you can get **voltage-controlled delays** of the trigger signal.
The inverted gate output on the first VCD is patched into the trigger input of the second. You use the trigger threshold control on the first VCD to determine the delay time $\mathbf{t_D}$. The length $\mathbf{t_T}$ of the delayed trigger signal is controlled by setting the threshold control on the second VCD (see fig.5).

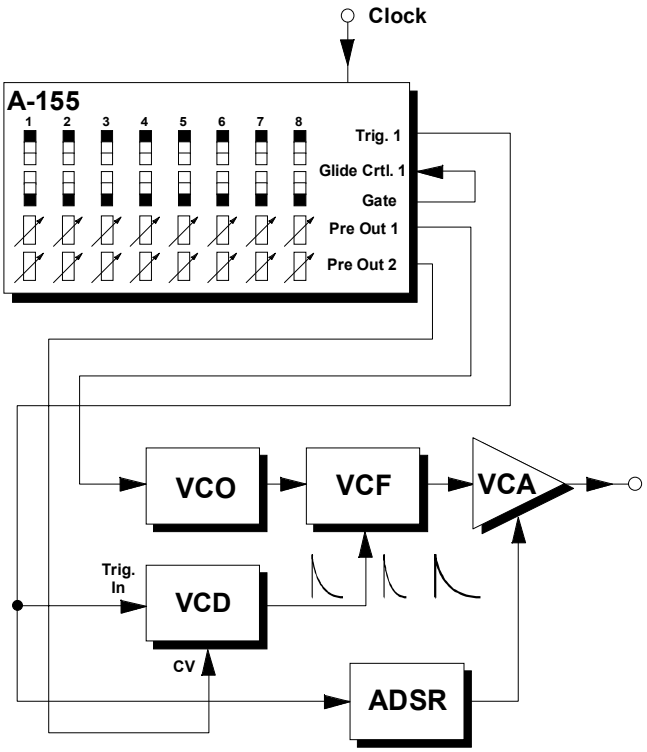

fig. 3: "injecting some life into a sequence"

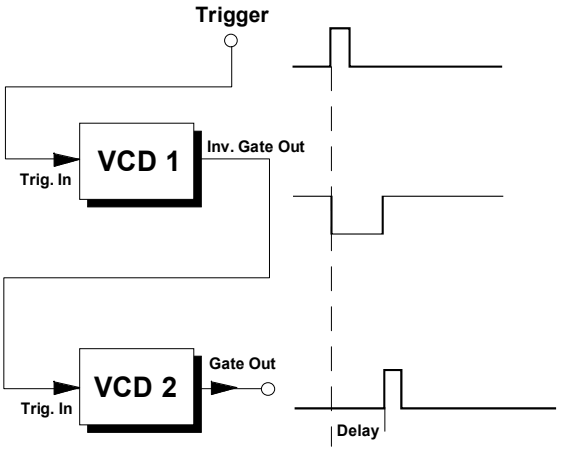

fig. 4: voltage-controlled trigger delay

This sort of patch for delaying a trigger signal is very useful, for example, in producing **delayed vibrato** or other modulation. For more suggestions of uses, look at the user examples in the A-162 (Trigger Delay) manual.

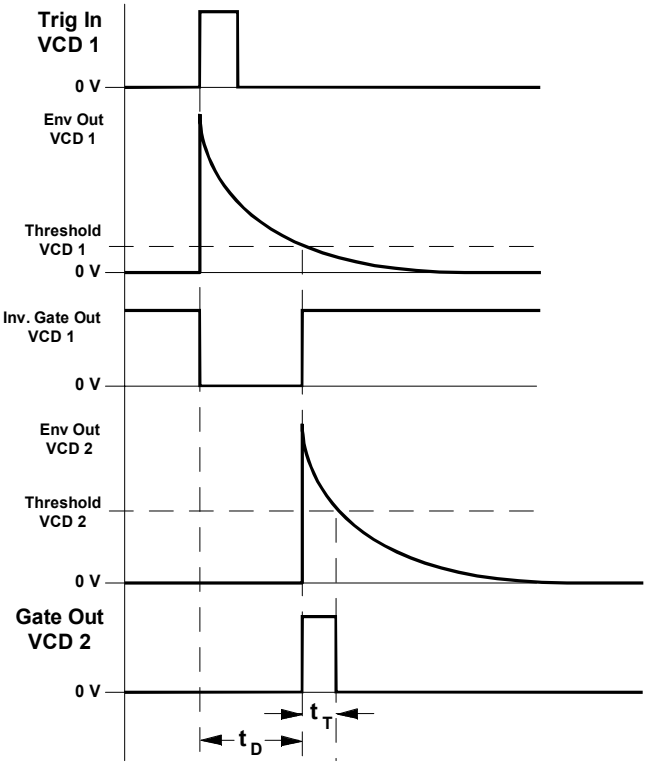

fig. 5: Signals for the voltage-controlled trigger delay

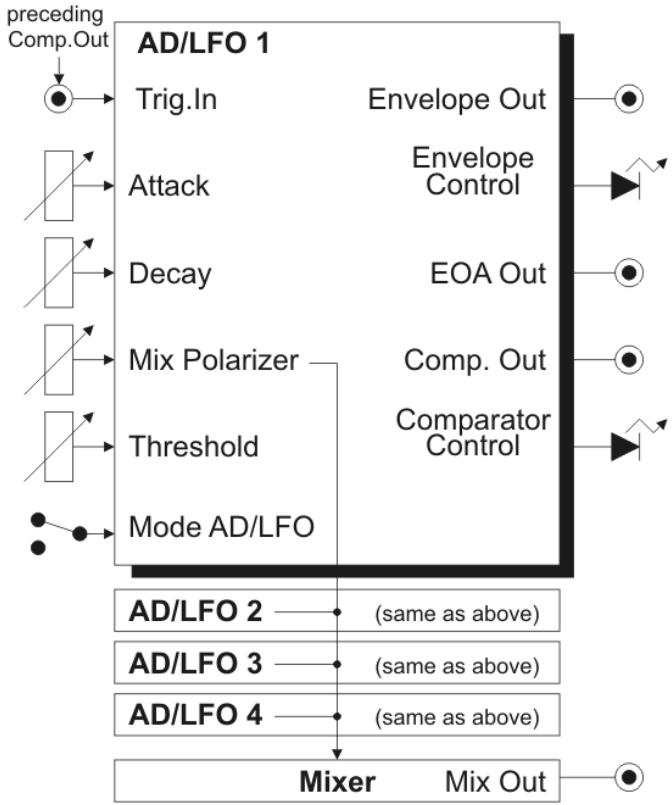

Fig. 1: A-143-1 Controls, Inputs and Outputs

1. Introduction

Module **A-143-1** contains **four independent Attack/Decay generators**. When the module is used as a **complex envelope generator**, then two, three or four units are daisy-chained, i.e. the preceding unit triggers the following unit. But the four units can be used even as four separate AD generators (mode switch in position AD) or free-running AD-type LFOs (mode switch in position LFO). The LFO mode differs in several points from a regular LFO (e.g. A-145, A-146 or A-147), as the slopes are exponential - in contrast to linear slopes of a normal LFO. In addition the frequency is defined by both controls, as the attack control defines the duration of the rising slope, while the decay control defines the duration of the falling slope.

Each unit has available a comparator that compares the AD output voltage against a manually adjustable threshold and turns on the corresponding comparator output as soon as the AD output voltage goes below the threshold level during the decay phase. The comparator outputs are normalled to the trigger inputs of the following stage via the switching contacts of the trigger input sockets. Consequently the first unit triggers the second, the second triggers the third and so on (and the last unit triggers the first one).

Each AD/LFO unit also offers a polarizer control. This allows adding or subtracting all AD/LFO signals to the mix output with adjustable level. Additionally each unit features a single envelope output and a digital “End Of Attack (EOA)” output, that indicates the end of the attack phase.

2. Basic Principles

Fig. 2 shows the basic function of each unit:

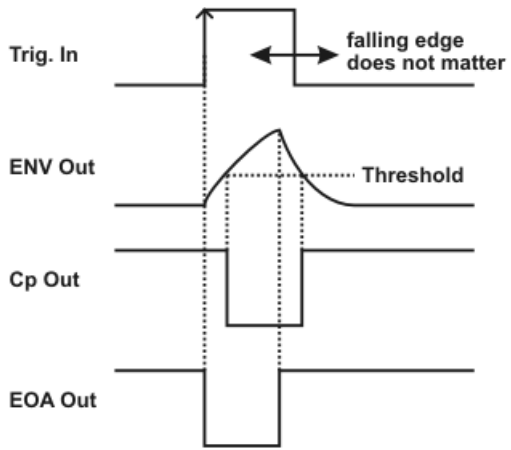

Fig. 2: Basic function

The positive edge of the trigger input starts the envelope signal and resets the “End of Attack (EOA)” output. The time for the rising slope of the envelope is defined by the Attack control. As soon as the maximum value (about +8 V) is reached, the EOA output is set to “high” and the decay state begins. The time for the falling slope of the envelope is defined by the Decay Control.

The threshold setting defines the behaviour of the Comparator output (Cp Out). This output turns “low” as soon as the level of the envelope signal exceeds the threshold level. Otherwise it’s high.

Both digital outputs EOA and Cp Out can be used to trigger other A-100 modules or other units of the A-143-1.

The retrigger behaviour of the A-143-1 is different compared to other envelope generators. During the rising slope of the envelope (attack phase) the envelope cannot be retriggered or reset. And during the falling slope (decay phase) the direction changes if a trigger signal appears (changes from decay to attack state).

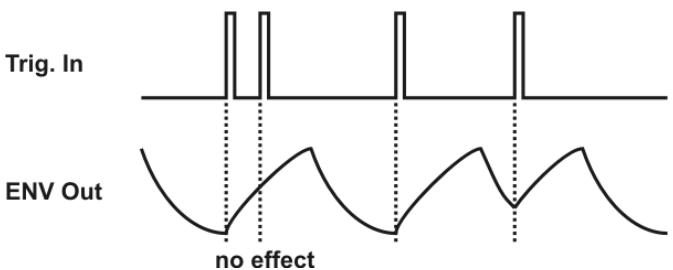

Fig. 3: Retrigger behaviour

Provided that the trigger inputs are not patched the four units are daisy chained via the comparator outputs (*Cp Out*) as they are normalled via the switching contacts of the trigger input sockets, i.e. each unit is triggered by the *Cp* output of the preceding unit. Fig. 4 shows both the behaviour of the module in the default state (complex/multi-state LFO) and with a trigger signal applied to trigger input 1 (complex envelope generator).

The rising edge of *Cp1* triggers the unit 2, the rising edge of *Cp2* triggers the unit 3 and so on. The example uses different *Attack*, *Decay* and *Threshold* settings for each unit.

At the bottom of the picture two possible mixes are shown: For the first mix all envelope signals are added up with the same level and polarity (+1), i.e. all polarizer controls are in the fully clockwise position. For the second mix the level/polarity is +1 for the units 1 and 4, and –1 for the units 2 and 3, i.e. the polarizer controls of unit 1 and 4 are fully clockwise and the polarizer controls of unit 2 and 3 are fully counter-clockwise.

The dashed lines at the right end of the mix graphs are valid if the module is in the cyclic mode, i.e. if the comparator output 4 is normalled to the trigger input 1 (i.e. default without external trigger signal). The permanent lines are valid if an external trigger signal is used to trigger unit 1 (i.e. the daisy chain is interrupted at trigger input 1).

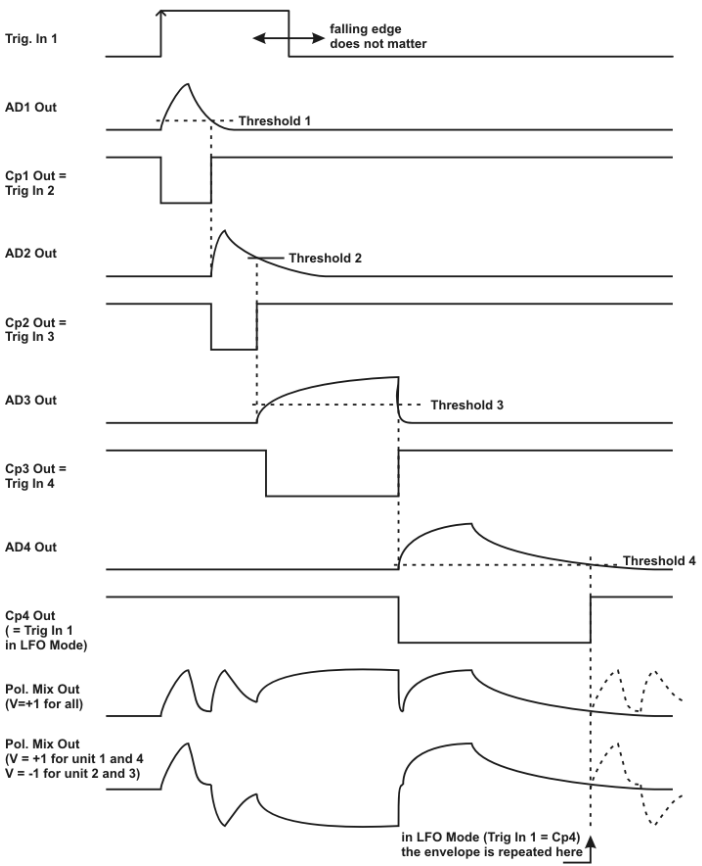

Fig. 4: Complex envelope generator / LFO

3. Overview

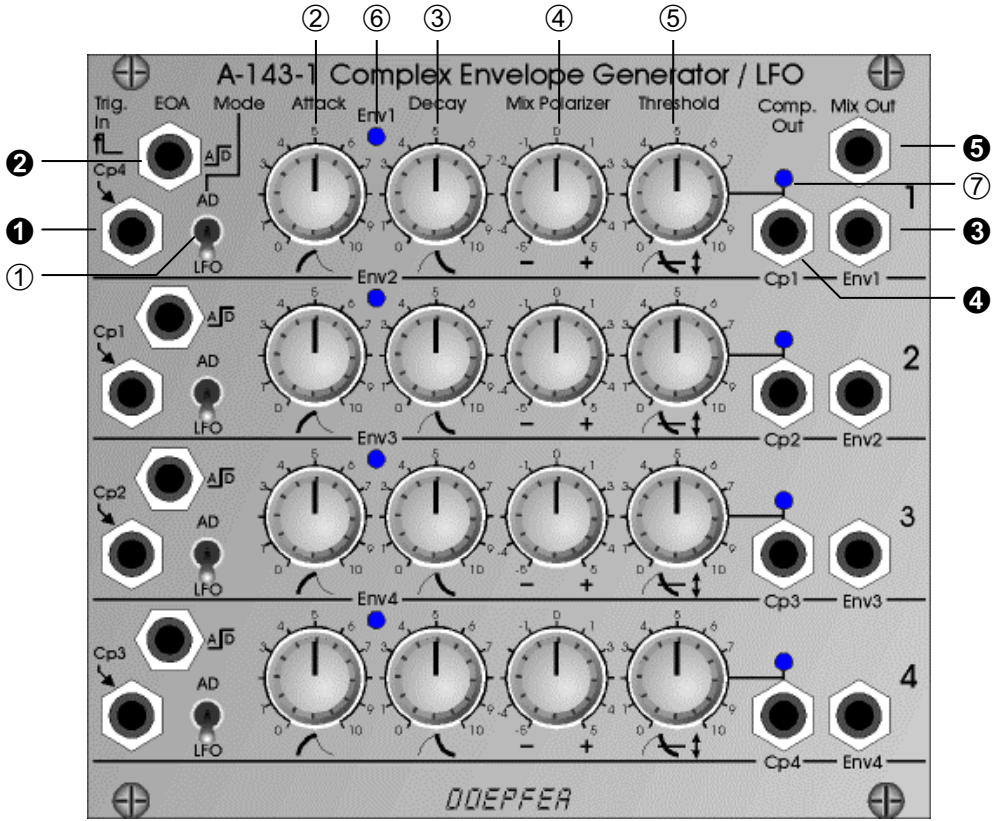

Fig. 5: A-143-1 front panel

Controls:

①	AD/LFO :	mode switch
②	Attack:	attack control (rising slope)
③	Decay:	decay control (falling slope)
④	Mix Polarizer:	polarizer control
⑤	Threshold:	threshold control for comparator
⑥	:	envelope display (LED)
⑦	:	comparator output display (LED)

Inputs and Outputs:

❶	Trig. In :	trigger input normalled to Cp 4 for unit 1 normalled to Cp 1 for unit 2 normalled to Cp 2 for unit 3 normalled to Cp 3 for unit 4
❷	EOA :	end of attack output
❸	Env x:	envelope output (x = 1…4)
❹	Cp x:	comparator output (x = 1…4)
❺	Mix Out:	mix output

The controls and outputs are the same for all four units.

Module width: 28 HP / 141.9 mm

Module current: 70 mA

3. Controls, Inputs and Outputs

❶ Trig. In : trigger input

Socket ❶ is the trigger input of the corresponding unit. The positive edge of this signal triggers the AD generator. If the unit in question is used as an LFO, a dummy cable or jack plug can be patched into this socket. Otherwise the LFO is retriggered by the comparator output *Cp* of the preceding unit because of the normalling of the trigger socket (for details concerning the retrigger function please refer to page 2).

The trigger inputs ❶ are normalled in that way:

- Trigger input #1 is normalled to Cp #4
- Trigger input #2 is normalled to Cp #1
- Trigger input #3 is normalled to Cp #2
- Trigger input #4 is normalled to Cp #3

Provided that the four mode switches ① are set to AD and the trigger inputs ❶ are left open the module works as a complex 8-stage LFO with four adjustable rise and fall times (A/D controls ② and ③), segment levels (mix polarizer controls ④) and segment distances (threshold controls ⑤).

① AD/LFO : mode switch

This switch defines the function of the corresponding unit. In the upper position (AD) the envelope mode is selected, in the lower position (LFO) the free-running mode.

<u>Remark</u>: In LFO mode a dummy cable or jack plug should be inserted into the trigger input of the corresponding unit. Otherwise the Cp output of the preceding unit will retrigger the LFO (see page 2) because of the normalled trigger socket. This is of course only important if this special retrigger behaviour is not desired.

② Attack: attack control (rising slope)
③ Decay: decay control (falling slope)

These controls set the **attack time** and the **decay time**. The voltage at the envelope output ❸ rises to the maximum, in a time determined by the setting of the attack knob. After the attack phase is finished, the voltage falls down to zero, in a time determined by the setting of the decay knob.

❸ Env x: envelope output (x = 1…4)
⑥ : envelope display (LED)

Socket ❸ is the envelope output of the corresponding unit. The LED ⑥ displays the envelope's course. The voltage range is about 0...+8V in the AD mode, +0.5...+8V in the LFO mode.

④ Mix Polarizer: polarizer control

This control is used to add or subtract the envelope signal of the corresponding unit to/from the mix signal appearing at output ❺. This control is a so-called **polarizer**. The neutral position of the polarizer knob is at its center (0). Left from the center (area marked with a minus sign) the envelope signal of the unit is subtracted from the mix signal. Right from the center (area marked with a plus sign) the envelope signal of the unit is added to the mix signal. The distance from the center position determines the adding/subtracting level.

⑤ Threshold: threshold control for comparator
❹ Cp x: comparator output (x = 1…4)
⑦ : comparator output display (LED)

The threshold control ⑤ is used to adjust the threshold level of the comparator. The threshold setting defines the behaviour of the corresponding comparator output (Cp x). This output turns “low” as soon as the level of the envelope signal exceeds the threshold level. Otherwise it’s high. Please refer to the page 2 for details.

❷ EOA : end of attack output

This is the digital End Of Attack output (EOA). The EOA output is low during the attack stage and high otherwise. It can be used to trigger other A-100 modules or other units of the A-143-1.

❺ Mix Out: mix output

This is the sum output where all envelope signals are added or subtracted in accordance to the corresponding polarizer controls. It can be used as a complex envelope signal (all mode switches in AD position and an external trigger signal connected to one of the trigger inputs) or as complex LFO (same as before, but no trigger signal connected to one of the trigger inputs).

4. User Examples

The A-143-1 is suitable for all kinds of modulations where normally LFOs or envelope generators are used. Please refer to the user manuals of other envelope generators or LFOs for details (i.e. all A-14x modules).

The units of the A-143-1 can be used as single devices or several units can be combined to obtain complex envelopes or LFOs. In principle any control voltage input can be controlled by the A-143-1 to modulate the parameter in question. Typical applications are:

- **VCO Pitch/Frequency Modulation**
  Pitch/frequency modulation of a VCO produces **vibrato**.
- **VCO Pulse Width Modulation**
  Pulse width modulation of a VCO produces cyclical variation in tone colour (sounds similar to phasing)
- **VCA Loudness Modulation**
  Modulation of the gain of a VCA produces **Tremolo**
- **VCF Frequency or Resonance Modulation**
  Modulation of the cut-off frequency of a VCF produces cyclical variation in tone colour. For some filters even the resonance can be modulated.
- **VCP Phase Shift Modulation**
  Phase shift modulation of a phaser (e.g. A-101-3 or A-125) produces cyclic phasings or phase vibrato

By means of the universal vactrol module A-101-9 the parameters A and D can be **voltage controlled**. Please refer to the A-101-9 manual for details.

A special application of the quad AD generator is the subsequent control of up to four similar modules (e.g. VCAs, VCFs, VC phasers, VC flangers, VC frequency shifters …) for quadrophonic sounds:

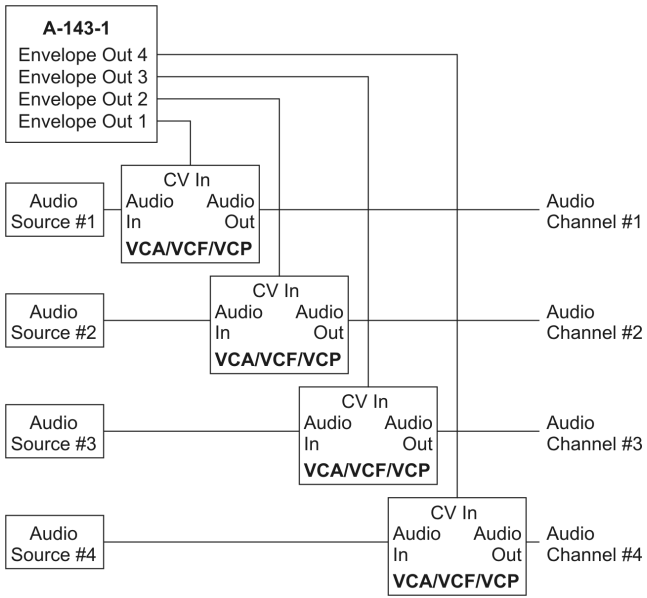

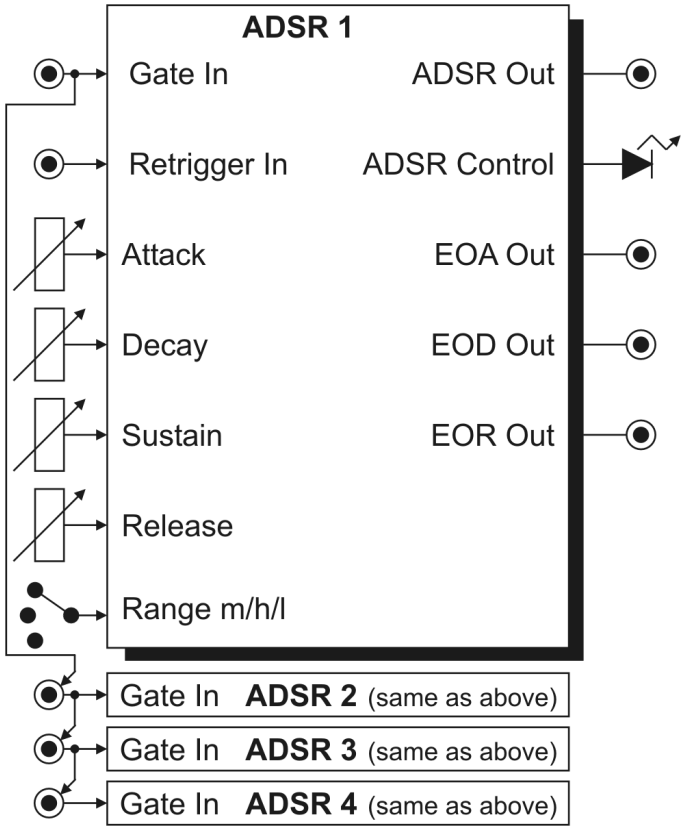

Fig. 1: A-143-2 Controls, Inputs and Outputs

1. Introduction

Module **A-143-2** contains four independent ADSR-type envelope generators. Each sub-unit has available the controls **Attack**, **Decay**, **Sustain** and **Release**. The three-position **Range** switch allows selection of the desired time range (low - high - medium). The adjustable envelope time ranges from several minutes to less than 100 microseconds. On top of this each unit is equipped with three digital outputs (high/low): "**End of Attack** (EOA)", "**End of Decay** (EOD)" and "**End of Release** (EOR)". As soon as the criterion is valid (e.g. end of decay state) the corresponding digital outputs turns "high". These outputs can be used e.g. to daisy-chain several ADSR units. For this the digital output in question (EOA, EOD or EOR) has to be connected to the Gate input of the following ADSR. Even automatically running envelopes (pseudo LFOs) or so-called "quadrature envelopes" with cyclical modulations of several ring-shaped, daisy-chained ADSRs are possible.

In addition to the obligatory **Gate** (G) input for envelope generators each unit has available a **Retrigger** (Rt) input. The retrigger turns the direction to "upward" if the envelope has already reached the decay state while the retrigger pulse occurs. The Gate inputs 2, 3 and 4 are normalled to Gate input 1, i.e. the Gate input 1 is connected to the switching contacts of the other inputs. Thus only one Gate signal at Gate input 1 can be used to trigger all four units simultaneously.

The envelope outputs are displayed with LEDs.

2. Basic Principles

Fig. 2 shows the basic function of each unit:

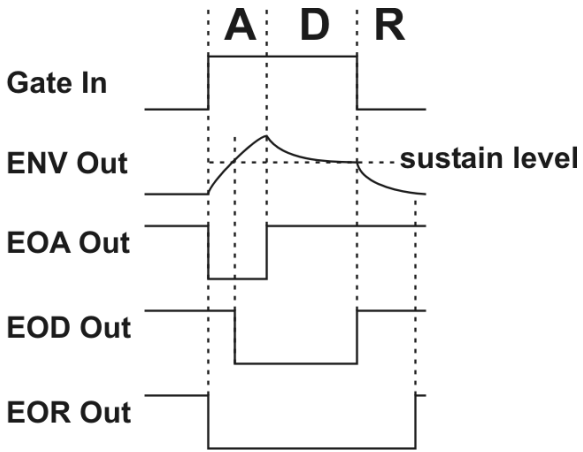

Fig. 2: Basic function

The positive edge of the gate input starts the envelope signal and resets both the "**End of Attack (EOA)**" and "**End of Release (EOR)**" output. The time required to reach the maximum value of the envelope is defined by the *attack* control. As soon as the envelope level reaches the sustain level during the rising slope, the digital "**End of Decay (EOD)**" output turns low. As the maximum value (about +8 V) is reached, the EOA output turns "high" and the so-called **Decay** phase begins. In the decay phase the slope falls to the **Sustain** level defined by the *sustain* control with a time adjusted by the *decay* control. At the end of the decay phase the envelope output remains at the sustain level until the gate signal turns low. When the gate signal turns low the EOD output turns high and the **Release** phase of the envelope begins. The slope falls to zero with a time adjusted by the *release* control. When the envelope level reaches about +0.5V the EOR output turns high.

The retrigger behaviour of the A-143-2 is different compared to other envelope generators. During the attack phase the envelope cannot be retriggered or reset. During the decay phase the envelope direction changes if a positive edge appears at the retrigger input (i.e. the envelope changes from decay to attack state).

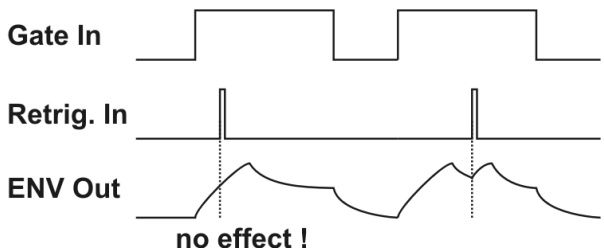

Fig. 3: Retrigger behaviour

3. Overview

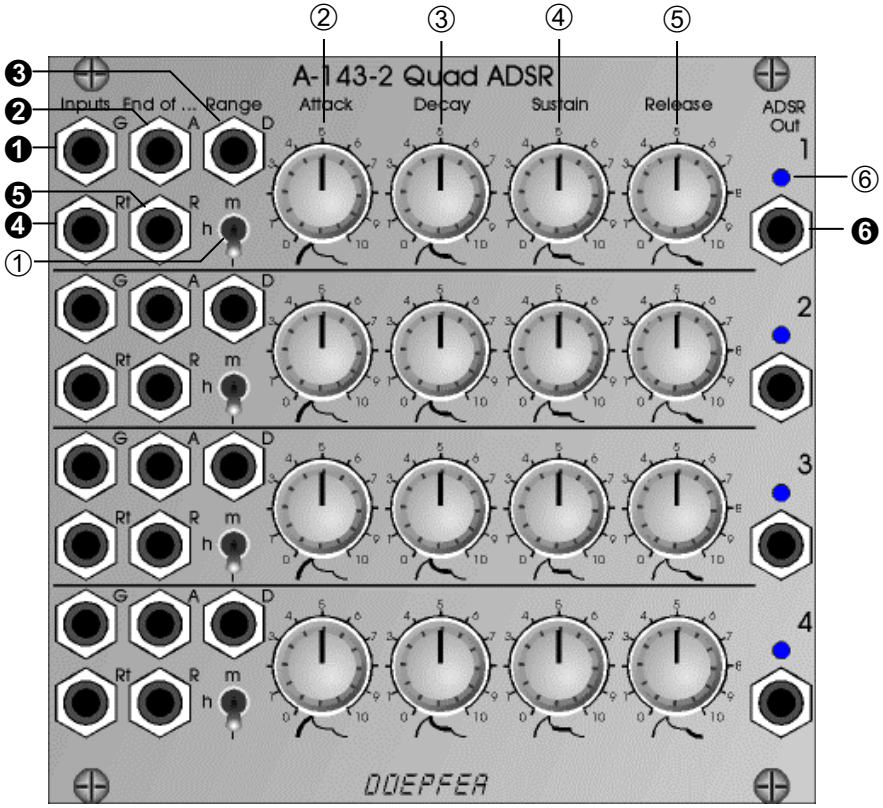

Fig. 5: A-143-2 front panel

Controls:

① Range :	range switch low – high – medium
② Attack :	attack control
③ Decay :	decay control
④ Sustain :	sustain control
⑤ Release :	release control
⑥ :	envelope display (LED)

Inputs and Outputs:

❶ G :	gate input (gate inputs 2…4 are normalled to gate input 1)
❷ End of A :	end of attack output
❸ End of D :	end of decay output
❹ Rt :	retrigger input
❺ End of R :	end of release output
❻ ADSR Out:	envelope output

The controls and outputs are the same for all four units.

Module width: 26 HP / 131.8 mm

Module current: 70 mA

3. Controls, Inputs and Outputs

❶ G : gate input
❹ Rt : retrigger input

Socket ❶ is the ADSR's gate input, socket ❹ the retrigger input. The detailed function of these inputs is described on page 2.
The gate inputs of the units 2…4 are normalled to the gate input of unit 1. If one common gate signal has to be used for all four units this signal has to be patched into the gate input of unit 1. As soon as a plug is inserted into the gate input 2, 3 or 4 the default connection is interrupted for the unit in question.
The retrigger inputs are not normalled.

① Range : range switch low – high – medium
② Attack : attack control
③ Decay : decay control
④ Sustain : sustain control
⑤ Release : release control

These controls define the ADSR shape. The rotary controls ②, ③, ④ and ⑤ are used to adjust the **attack time,** the **decay time,** the **sustain level** and the **release time**. The **range** switch ① is used to select one of three time ranges for the time controls attack, decay and release. The meaning of attack, decay, sustain and release is described in detail on page 2.

❻ ADSR Out: envelope output
⑥ : envelope display (LED)

Socket ❻ is the output of the envelope generator. The envelope voltage ranges from 0 to about +8V. The envelope signal is displayed with the LED ⑥.

❷ End of A : end of attack output
❸ End of D : end of decay output
❺ End of R : end of release output

These are three digital outputs that indicate the end of the attack, decay or release phase. As soon as the criterion in question is valid, the corresponding digital output turns "high". The three digital outputs are described in detail on page 2. The output levels are about +10V.

These outputs can be used to trigger other A-100 modules (or another unit of the A-143-2) synchronized to the ADSR envelope generated by the A-143-2.

4. User Examples

The A-143-2 is suitable for all kinds of modulations where envelope generators are used. Please refer to the manuals of other envelope generators (e.g. A-140, A-141, A-142).

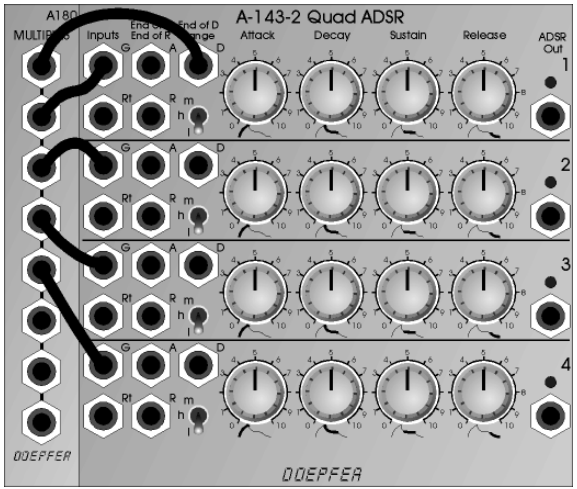

LFO / Master Clock

In this example unit# 1 is used as an LFO (EOD is patched to the gate input via multiples). The controls A, D, S and R are used to define the frequency, shape and lower level (S) of the LFO signal. EOD of unit#1 is connected to the gate inputs of unit#2...4 and works as a master gate signal. The four channel example of A-143-1 can be realized with the A-143-2 as well.

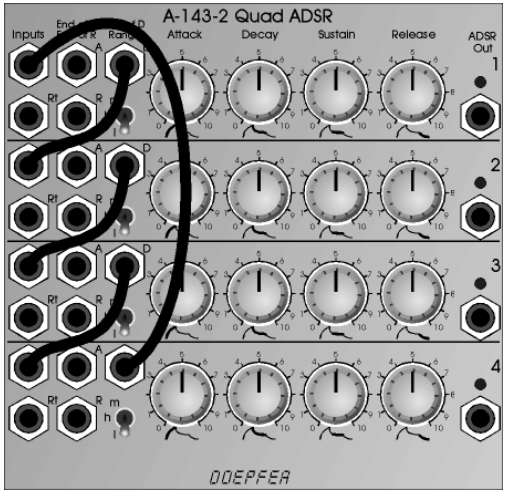

Cyclically triggered envelope generators

The EOD output of each unit is patched to the gate input of the succeeding unit. The EOD output of unit #4 is patched to the gate input of unit #1. If instead of this connection an external gate signal is connected to the gate input of unit #1 the "sequenced" envelopes can be synchronized to this signal.

By means of the universal vactrol module A-101-9 the parameters A, D and R can be **voltage controlled**. Please refer to the A-101-9 manual for details.

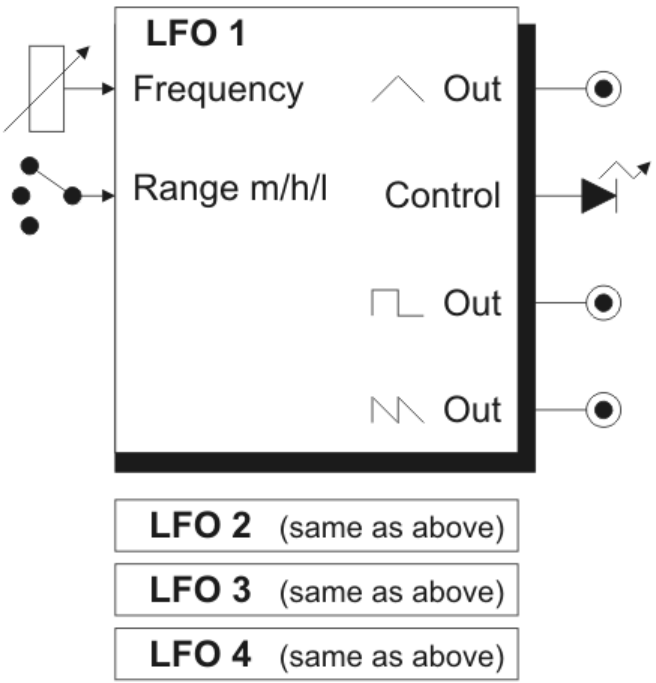

Fig. 1: A-143-3 Controls and Outputs

1. Introduction

Module **A-143-3 Quad LFO** is a low-cost four-fold modulation oscillator and includes four independent **low frequency oscillators (LFO's)**, which produce cyclical control voltages in a wide frequency range.

Three waveforms are available for each LFO: **triangle, square and sawtooth**. The frequency of the sawtooth output is twice the frequency of the other outputs.

The LFO's can be used as **modulation sources** for any control voltage input of other modules - for instance modulating the pulse width or frequency of a VCO, modulating the cut-off frequency of a VCF or the phase-shift of a VCP, amplitude modulation with a VCA, delay time of a BBD module, parameters of a voltage controlled wave shaper/multiplier, or any other control voltage input.

A three-way switch let's you select three frequency ranges, spanning from about two cycles per minute at the lowest, to moderate audio frequency at the highest.

The module includes four identical units.

2. Overview

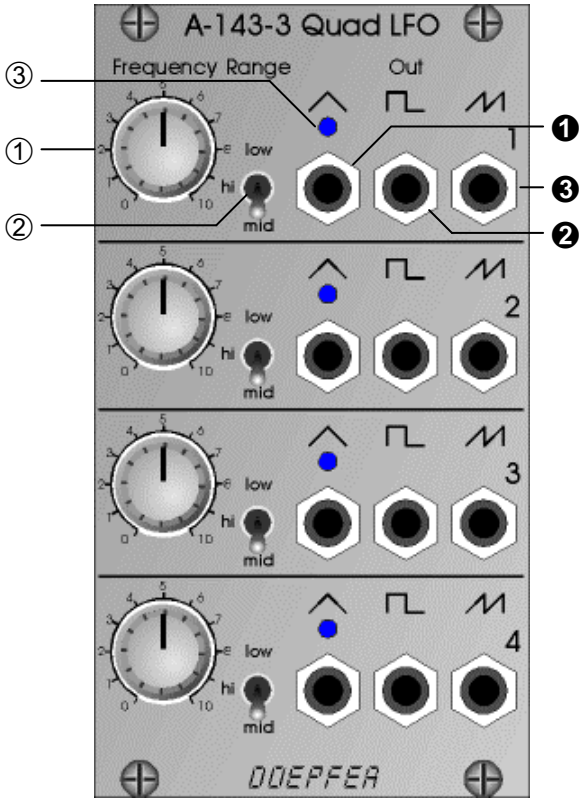

Fig. 2: A-143-3 front panel

Controls:

① Frequ. :	frequency control
② Range:	frequency range switch
③ :	LED control

Outputs:

❶ :	triangle output
❷ :	rectangle output
❸ :	sawtooth output

The controls and outputs are the same for all four sub-units.

Module width: 14 HP / 70.8 mm

Module current: 70 mA

3. Controls and Outputs

① Frequency

This control adjusts the frequency of the LFO within the frequency range set by the range switch ②.

② Range

Use switch ② to select a suitable frequency range:

- **L** (low): minimum about 2 cycles per minute
- **M** (medium): normal LFO range
- **H** (high): moderate audio range

Pay attention that the high range is in the middle position due to technical reasons.

③ LED

LED ③ displays the triangle signal that appears at socket ❶.

If the LFO frequency goes above about 25 Hz, our persistence of vision means that the LEDs look permanently on.

❶

This is the output for the **triangle** wave, whose frequency is displayed by LED ③. The output is symmetrical around 0V, the level is about ± 7 V.

❷

This is the output for the **square** wave. The output is symmetrical around 0V, the level is about ± 6 V.

❸

This is the output for the **sawtooth** wave. The output is symmetrical around 0V, the level is about ± 7 V. To obtain an inverted sawtooth the voltage inverter module A-175 may be used.

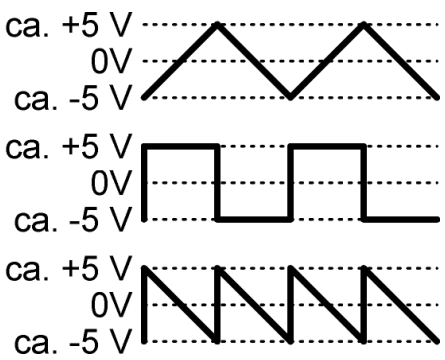

Fig. 3: A-143-3 waveforms and levels

4. User Examples

An LFO can be used for all sorts of different modulations:

- **VCO Pitch/Frequency Modulation**
  Pitch/frequency modulation of a VCO produces **vibrato**.
- **VCO Pulse Width Modulation**
  Pulse width modulation of a VCO produces cyclical variation in tone colour (sounds similar to phasing)
- **VCA Loudness Modulation**
  Modulation of the gain of a VCA produces **Tremolo**
- **VCF Frequency or Resonance Modulation**
  Modulation of the cut-off frequency of a VCF produces cyclical variation in tone colour. For some filters even the resonance can be modulated.
- **VCP Phase Shift Modulation**
  Phase shift modulation of a phaser (e.g. A-101-3 or A-125) produces cyclic phasings or phase vibrato

Please refer to the user's manual of other LFOs or modulation sources for detail (A-145, A-146, A-147, A-149-1, A-118 random output).

By means of the universal vactrol module A-101-9 the frequency can be **voltage controlled**. Please refer to the A-101-9 manual for details.

In principle any control voltage input can be controlled by an LFO to modulate the parameter in question.

A special application of the quad LFO is the simultaneous modulation of several parameters of the same module.

Example #1: **Wave Multiplier A-137**

- LFO 1 controls Multiplication
- LFO 2 controls Folding Level
- LFO 3 controls Folding Symmetry
- LFO 4 controls Harmonics

Example #2: **VC Mixer A-135**

- LFO 1 controls VCA1
- LFO 2 controls VCA2
- LFO 3 controls VCA3
- LFO 4 controls VCA4

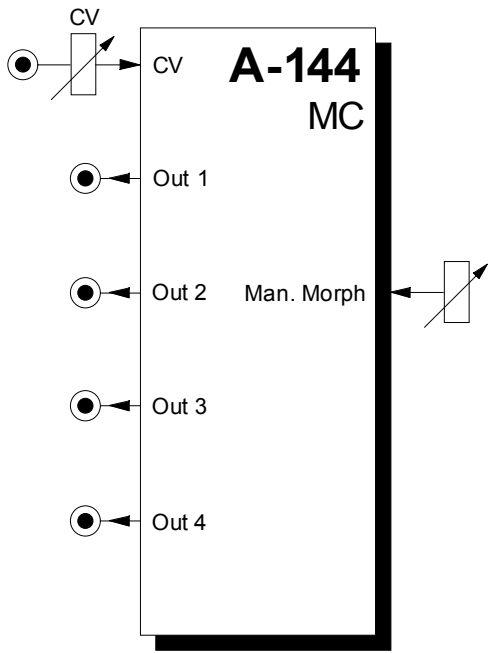

1. Introduction

Module **A-144** is an extension module for the **Voltage Controlled Mixer A-135**. It is a so-called **Morphing Controller** that derives from a linear **increasing control voltage** at the input (0...+5V) **four displaced triangle voltages** (0 bis +5 V). These voltages are used as control voltages for the Voltage Controlled Mixer to obtain a fading over ("morphing") the four A-135 audio inputs with only one control voltage fed into the A-144 CV input.

Morphing can be **controlled manually** with the manual morphing control and **modulated with an external control voltage** (e.g. from LFO, ADSR, Random, MIDI-to-CV, Theremin, Light-to-CV, analog sequencer) with attenuator.

Applications: voltage controlled morphing of 4 audio signals in combination with A-135, e.g. morphing between the **4 waveform outputs of an VCO** (sawtooth/ rectangle/ triangle/ sine) or the **4 filter outputs of the multimode filter A-121** (lowpass/ bandpass/ highpass/ notch) or the 4 filter outputs of the A-105 (6/12/18/24dB) to obtain a **filter with voltage controlled slope**.

2. Overview

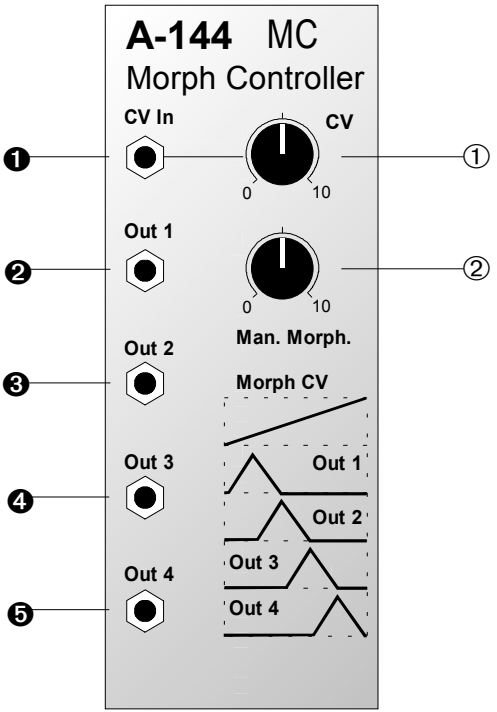

Controls:

① **CV** : Attenuator for the control voltage at input ❶

② **Man. Morph** : Manual morphing control

In- / Outputs:

❶ **CV In** : Control voltage input

❷ **Out 1** : Control voltage output 1 (0...+5 V)

❸ **Out 2** : Control voltage output 2 (0...+5 V)

❹ **Out 3** : Control voltage output 3 (0...+5 V)

❺ **Out 4** : Control voltage output 4 (0...+5 V)

3. Controls

① CV

Use attenuator ① to adjust the **level** of the control voltage at CV input ❶ affecting the morphing effect.

② Man. Morph.

Control ② adjusts the **manual morphing**.

The module generates an internal control voltage that is the sum of the voltage generated by the manual control ② and the external control ❶ attenuated with the attenator ①. This internal control voltage is fed to the 4 internal control voltage modifiers that generate the 4 morphing control voltages appearing at the outputs ❷ to ❹.

Fig. 1 shows the connection between internal control voltage and the 4 output control voltages. The internal voltage is equivalent to the position of control ② if no external CV is used, or is equivalent to the external control voltage ❶ if manual control ② is set to 0 and attenator ① is turned fully clockwise.

E.g. the control voltage "**a**" has the following effect:

Out 1 = max. (i.e. +5V) • Out 2 = 0 • Out 3 = 0 • Out 4 = 0.

In case "**b**" the following output voltages appear:

Out 1 = 0 • Out 2 = 0 • Out 3 = 50 % (i.e. +2.5V) • Out 4 = 50 % (i.e. +2.5V).

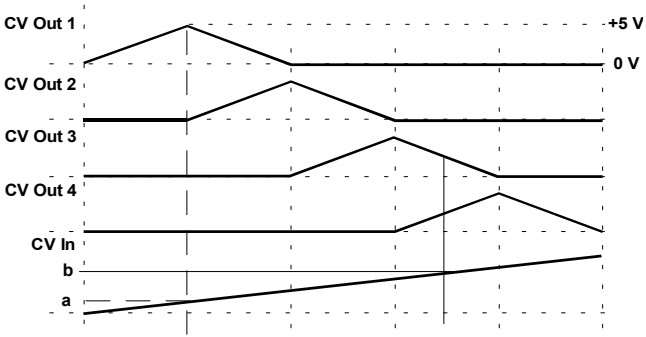

Fig. 1: Connection between internal control voltage (= sum of manual CV and external, attenuated CV) and the resulting output control voltages (range of input and output voltages is 0...+5V)

4. In- / Outputs

❶ CV In

The **external control voltage** is fed into the **CV input ❶**.

❷ Out 1 • ... • ❺ Out 4

The 4 output control voltages are available at the **CV outputs ❷** to **❺** .

5. User examples

Morphing (standard application)

The patch in fig. 2 shows the typical application of the A-144: the fading over (“morphing”) of 4 audio signals in combination with the voltage controlled mixer module A-135.

An increasing control voltage (typical range 0 -> +5V) at the CV input of module A-144 results in continuous “morphing” from audio signal 1 via 2 and 3 to 4.

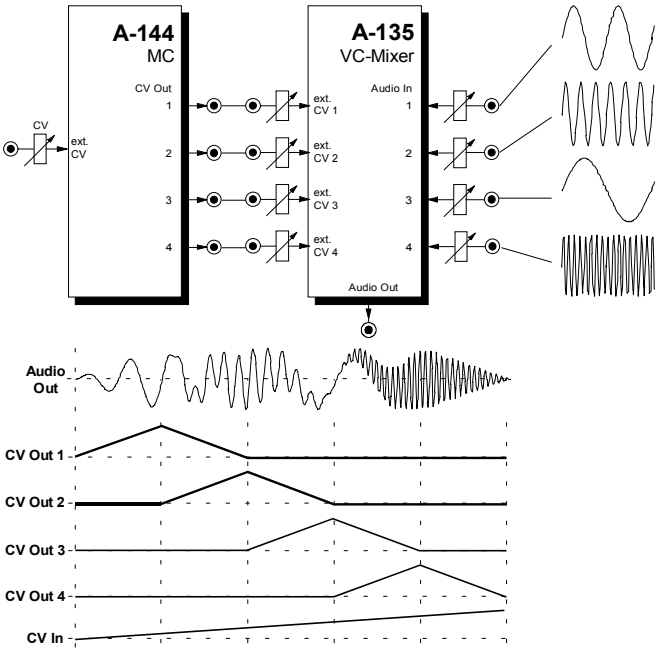

Fig 2: Morphing of four audio signals

Different control voltage sources lead to interesting morphing effects:
Automatic morphing ca be realized e.g. with LFO (A-145, A-146), VCLFO (A-147), ADSR (A-140), VCADSR (A-141) or analog sequencer (A-155).
For **manual morphing** e.g. these modules can be used: Theremin (A-178), Light controlled CV (A-179), Foot controller (A-177), Joy Stick (A-174), MIDI-to-CV interface (A-190, A-191, e.g. in combination with modulation wheel or after touch).

Quadrophonic spatial positioning

In the patch in fig. 3 the A-144 outputs control four VCAs. The audio inputs of the VCAs may be fed with the same of even different audio signals. Each VCA is followed by a separate power amplifier/loudspeaker.

The CV input voltage of the A-144 defines the spatial position of the audio signal in the quadrophonic spcae. Additional modules like CV-Phasers (A-125) or CV frequency shifters (A-126) may be used to intensify the spatial impression.

A sawtooth control voltage is used to obtain a continuous spatial rotation of the audio signal.

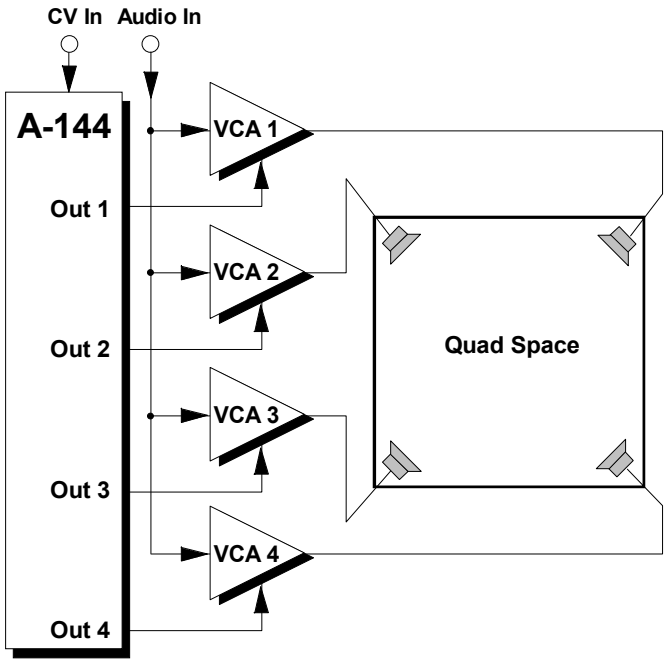

Fig. 3: Positioning of audio signals in the quadrophonic hearing space

6. Patch-Sheet

The following diagrams of the module can help you recall your own **Patches**. They're designed so that a complete 19" rack of modules will fit onto an A4 sheet of paper.

Photocopy this page, and cut out the pictures of this and your other modules. You can then stick them onto another piece of paper, and create a diagram of your own system.

Make multiple copies of your composite diagram, and use them for remembering good patches and set-ups.



- Draw in patchleads with colored pens.
- Draw or write control settings in the little white circles.

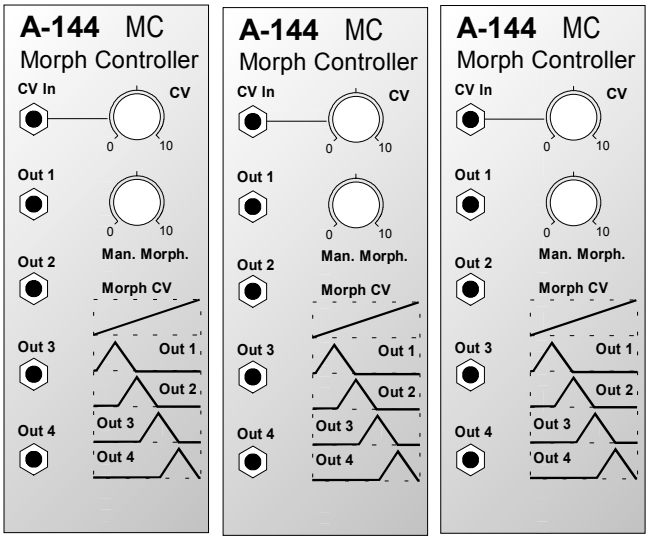

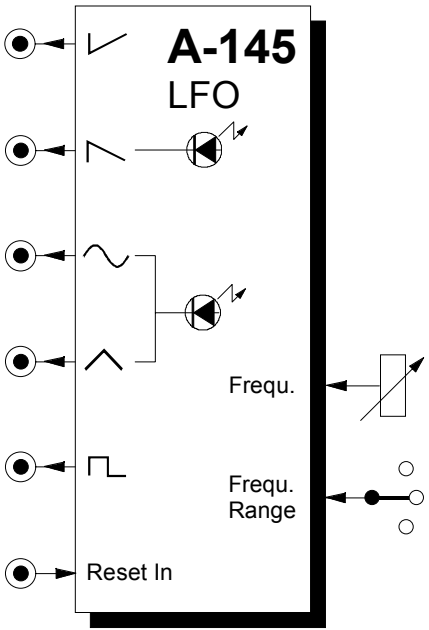

1. Introduction

Module **A-145 (LFO)** is a **low frequency oscillator**, which produces cyclical control voltages in a very wide range of frequencies.

Five waveforms are available: **sawtooth, inverted sawtooth, triangle, sine** and **square wave**.

The LFO can be used as a **modulation source** for any number of modules - for instance modulating the pulse width or frequency of a VCO, modulation of the cut-off frequency of a VCF, or amplitude modulation with a VCA.

A three-way switch lets you select three frequency ranges, spanning from one cycle every several minutes at the lowest, to audio frequency at the highest.

The LFO signal can also be synchronised, via the reset input.

2. Overview

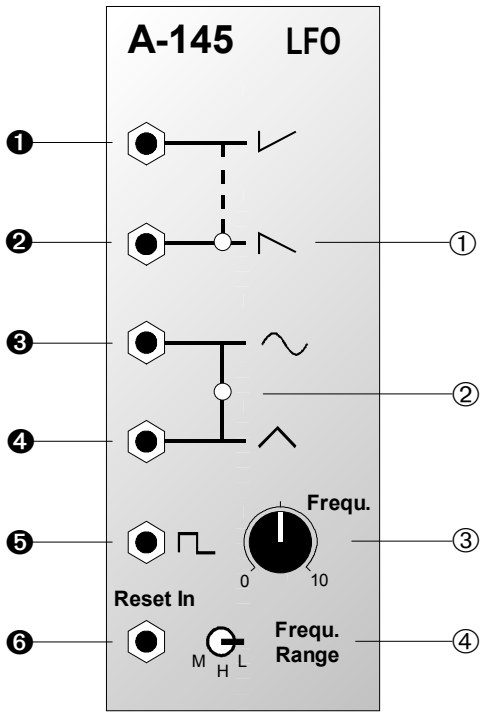

Controls and indicators

① **LED**: frequency indicator for the sawtooth wave at output ❷

② **LED**: frequency indicator for the sine and square waves at output ❸ and/or ❹

③ **Frequ.**: frequency control

④ **Frequ. Range**:switch for selecting frequency range

In / Outputs

❶ : output: inverted sawtooth

❷ : output: sawtooth

❸ : output: sine wave

❹ : output: triangle

❺ : output: square wave

❻ **Reset In**: synchronisation input

3. Controls and indicators

① LED ... ② LED

LEDs ① and ② show the frequency of the voltage output at sockets ❷ to ❹.

☞ If the LFO frequency goes above about 15 Hz, our persistence of vision means that the LEDs look permanently on.

③ Frequ.

This control adjusts the frequency of the LFO, within the parameters of the frequency range set by switch ④.

④ Frequ. Range

Use switch ④ to select a suitable frequency range from the three available:

- **L** (low):up to several minutes per cycle
- **M** (medium): normal LFO range
- **H** (high): audio range

4. In / Outputs

❶ 

This is the output for the **inverted sawtooth**. (Amplitude: ± 2.5 V).

❷ 

This is the output for the ordinary **sawtooth,** whose frequency is displayed by LED ①. (Amplitude: ± 2.5 V).

❸ 

This is the output for the sine wave, whose frequency is displayed by LED ②. (Amplitude: ± 2.5 V.)

❹

This is the output for the triangle wave, whose frequency is displayed by LED ②. (Amplitude: ± 2.5 V.)

❺ 

This is the output for the square wave (Amplitude: ± 2.5 V.)

❻ Reset In

LFO synchronisation is possible, by sending a trigger signal (eg. a gate) to the **reset input**. Every time a trigger voltage is sensed (for instance when a key is pressed), the LFO's waveform resets, and starts from its **zero point** (see Fig. 2).

Without synchronisation, the LFO is free running, so that wherever the waveform is when the trigger arrives, that's where it starts from (see Fig. 1).



Particularly with lower frequency modulations, you can use the reset / synchronisation option to make sure that the LFO starts from zero whenever a key is pressed (Keyboard Gate ⇨ Reset LFO).

If you don't want this effect, then leave the reset input unconnected, for a random LFO waveform response.

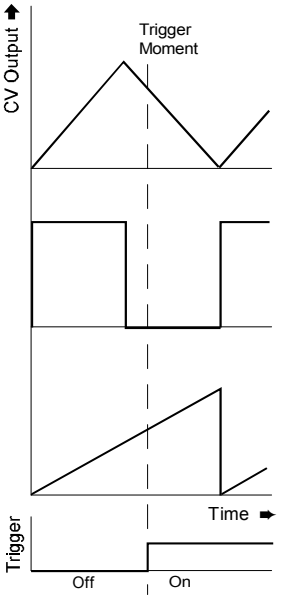

Fig. 1: LFO ***without*** Synchronisation

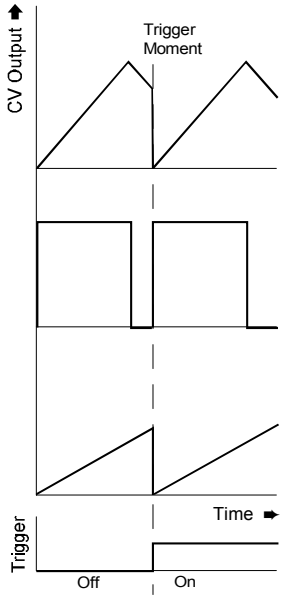

Fig. 2: LFO ***with*** Synchronisation

5. User examples

An LFO can be used for all sorts of different modulations:

- **LFO - VCA (A-130, A-131, A-132)**
  Modulation of the gain produces **Tremolo**
- **LFO - VCF (A-120, A-121, A-122, A-123)**
  Modulation of the cut-off frequency produces cyclical variation in tone colour - **Wah-wah**
- **LFO - VCO (PWM A-110, A-111)**
  Pulse width modulation using the LFO produces cyclical variation in tone colour (phasing type)
- **LFO - VCO (FM A-110, A-111)**
  Pitch modulation using LFO produces v**ibrato**.
- **LFO - VCP (A-125)**
  Phase shift modulation using LFO produces cyclic phasings or phase vibrato

The above effects occur with LFO frequencies in the sub-audio range. Once the LFO gets into the audio range, timbral changes always occur. Examples and further notes can be found in the manuals for the respective modules.

Producing echo effects

As well as modulation effects, LFOs can also create time-based **repeat effects**. In Fig. 3 the LFO is being used to produce an echo effect. The frequency and waveform of the LFO determine the delay-time and character of the sound, and the ADSR parameters determine the envelope and feedback amount of the echoes.

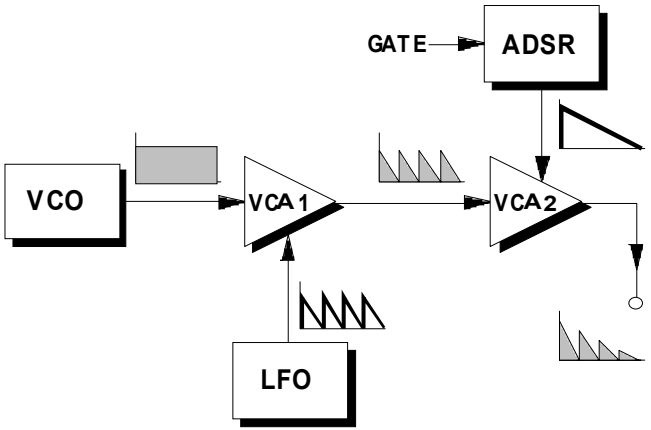

Fig. 3: Producing an echo effect

6. Patch-Sheet

The following diagrams of the module can help you recall your own **Patches**. They're designed so that a complete 19" rack of modules will fit onto an A4 sheet of paper.

Photocopy this page, and cut out the pictures of this and your other modules. You can then stick them onto another piece of paper, and create a diagram of your own system.

Make multiple copies of your composite diagram, and use them for remembering good patches and set-ups.

- Draw in patchleads with colored pens.
- Draw or write control settings in the little white circles.

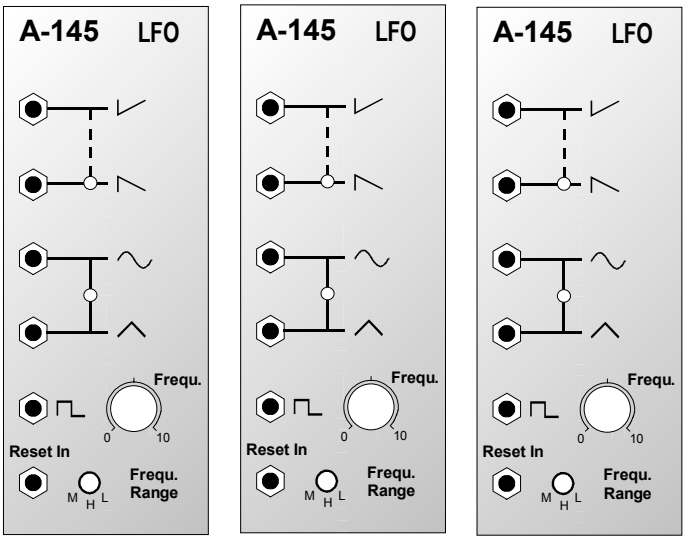

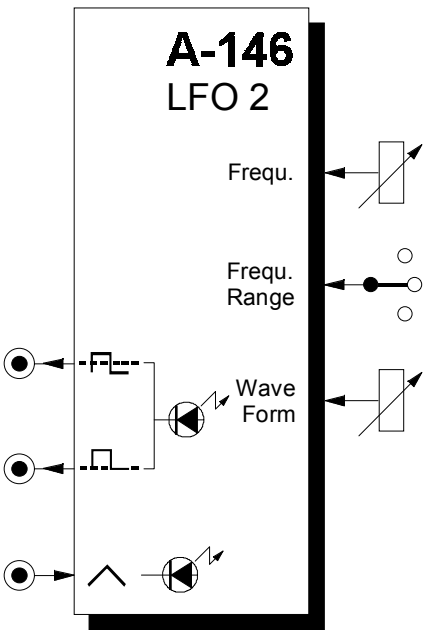

1. Introduction

Module **A-146 (LFO 2)** is a **Low Frequency Oscillator**, which produces periodic control voltages over a wide range of frequencies.

The LFO can be used as a **modulation source** for a series of modules (for instance pulse width and/or frequency modulation of a VCO, modulation of a VCF cut-off frequency, amplitude modulation with a VCA).

Three outputs are available, with different waveforms: **sawtooth / triangle; square wave, and positive-voltage square wave.**

The **waveform** is continuously adjustable from rising sawtooth, through triangle to falling sawtooth. The same control affects the **pulse width** of the square wave.

A three-way switch can select one of three frequency ranges, spanning from one cycle every few minutes, at the lowest, up to audio frequency at the highest.

2. Overview

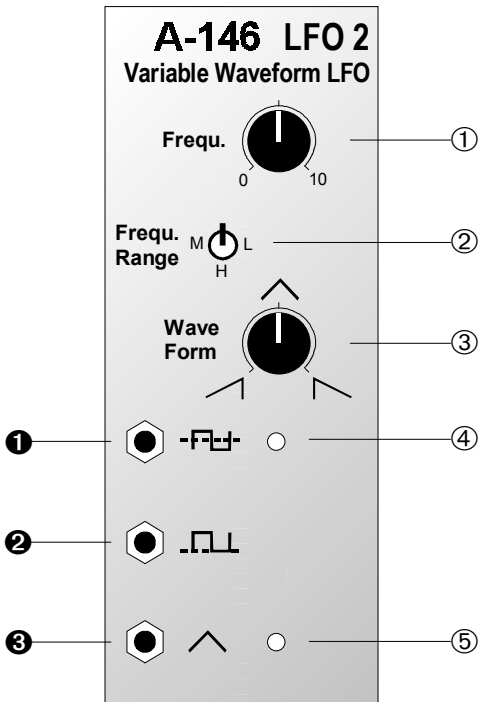

Controls and indicators:

① **Frequ.** : frequency control

② **Frequ. Range** : switch for selecting frequency range

③ **Waveform** : control for adjusting the waveform or pulse width

④ **LED** : square wave frequency indicator

⑤ **LED** : sawtooth / triangle wave frequency indicator

In / Outputs:

❶ : output for normal square wave

❷ : output for positive square wave

❸ : output for sawtooth / triangle wave

3. Controls and indicators

① Frequ.

Use this control to set the LFO's **frequency,** within the range set by ④.

② Frequ. Range

Use frequency range switch ④ to select a suitable range from the three available :

- **L** (low): up to several minutes per cycle
- **M** (medium): normal LFO range
- **H** (high): audio range

③ Waveform

The waveform of the signal at output ❸ can be continuously varied with this control, from **rising sawtooth** (fully left) through **triangle** (centre position) to **falling sawtooth** (fully right). The same control alters the pulse width of the rectangle wave at outputs ❶ and ❷.

④ LED • ⑤ LED

LEDs ④ and ⑤ indicate the frequency rate of the waveforms at outputs ❶ to ❸.

☞ If the LFO frequency goes above about 15 to 20 Hz, our persistence of vision means that the LEDs look permanently on.

4. In / Outputs

❶ -⊓⊔-

This socket is the output for the **normal** (positive / negative amplitude - ± 2.5 V) **square wave**, whose frequency is displayed by LED ④.

❷ -⊓⊔-

This socket is the output for the **positive square wave** (amplitude + 5 V), whose frequency is displayed by LED ④.

❸ ⋀

This output, depending on the setting of control ③, sends out a rising sawtooth, triangle or falling sawtooth waveform (amplitude ± 2.5 V) whose frequency is indicated by LED ⑤.

5. User examples

The LFO can be used for all sorts of modulation:

- **LFO - VCA**
  Modulation of the amplifier produces periodic changes in **loudness (Tremolo)**
- **LFO - VCF**
  Modulation of the cut-off frequency produces periodic changes in **timbre (Wah-Wah)**
- **LFO - VCO (PWM)**
  Modulation of the pulse width produces periodic changes in **timbre (Pulse Width Modulation)**
- **LFO - VCO (FM)**
  Modulation of the VCO frequency produces periodic changes in **pitch (Vibrato)**.

The above effects occur with LFO frequencies in the **sub-audio range**. Once the LFO gets into the audio range, timbral changes always occur. Examples and further notes can be found in the manuals for the respective modules.

LFO as timing generator

Besides modulation, the LFO can also be used as a timing generator, providing triggers, for instance, to control the A-160 clock sequencer (see user examples for the A-160 and A-161).

A-146 special features and their uses

Compared with the A-145 "standard LFO", the A-146 has the following particular features and uses:

- **Variable waveform**
  The adjustable nature of the sawtooth / triangle waveform gives you great flexibility in controlling **slow filter sweeps** or **tremolo**. Whereas the rising sawtooth on the A-145 ends abruptly, on the A-146 you can produce whatever slope on the falling edge you want, by setting the control ③ at various positions around nine o'clock.

  The adjustable envelope also gives flexible control of **Amplitude Modulation** (see A-130 user examples) and **Frequency Modulation** (see A-110, A-111 user examples) in the **audio range**, to produce new timbres. Whereas the overtone-rich sawtooth waveform produces lots of sidebands (see the A-110 manual), moving the control towards the triangle wave setting (12 o'clock) reduces the sidebands, because of the triangle wave's comparative lack of overtones.

- **Variable pulse width**
  In using the square wave for AM or FM in the audio range, it's possible to control the **timbre** by adjusting the pulse width, because the amount of overtones (and sidebands) present is directly related to the width of the pulse.

  The A-146's pulse width control also comes in useful when using the LFO as a **trigger or gate generator** for repeated sequences. The patch in Fig. 3 is an example: the envelope (set to a duration $\mathbf{t_G}$, which is shorter than the LFO's half-cycle), gives the rhythm a more percussive feel. Whereas with the A-145, an extra A-162 trigger delay module would have to be used to adjust the gate duration (Delay = 0, Length =...) to $\mathbf{t_G}$, that's not the case with the A-146: you simply have to adjust the pulse width.

- **Positive square wave output**

  This output has the useful function of being able, unlike a normal positive/negative square wave, to create **pitched repeats which stay in tune.**

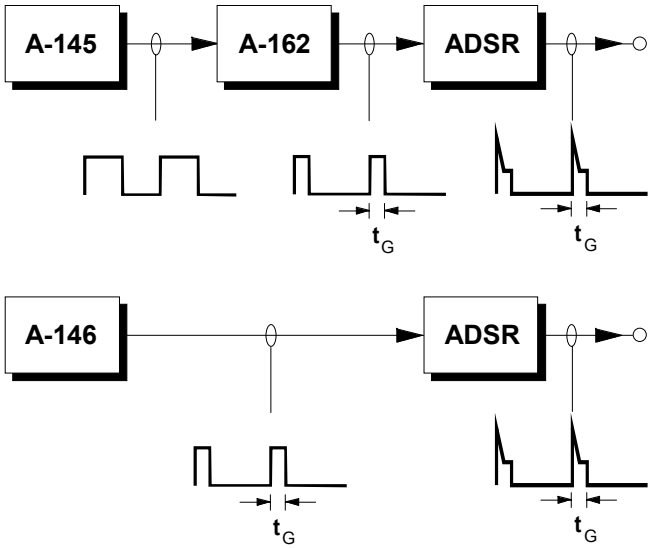

Fig. 3: Producing gate pulses of variable duration

In Fig. 4 on page 6, the pitch of a VCO is controlled by a CV from a keyboard, but also from the square wave output of the A-146, via input CV2. The voltage at CV2 is set with the attenuator to exactly 1 volt.

With the **normal positive/negative square wave** modulating the pitch, the result is notes that are annoyingly **out of tune** with the keyboard (see Fig. 4, top right of diagram).

If instead you use the **positive square wave**, the octave jumps are completely **in tune** with the keyboard (see Fig. 4, bottom right of diagram).

You can use this characteristic in your music, for instance to produce a **mandolin effect**. The interval of the strummed notes is set with the VCO's CV2 attenuator, and the speed of repeat is set by the frequency control on the A-146.

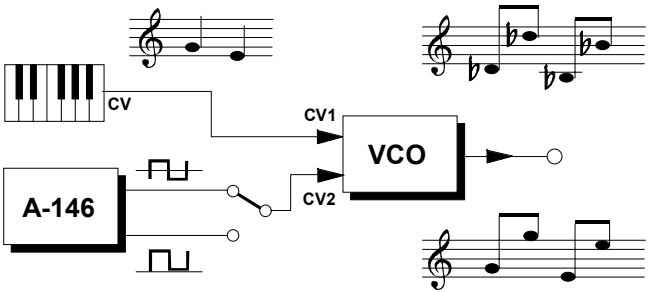

Fig. 4: Producing pitched repeats that are completely in tune with the keyboard.

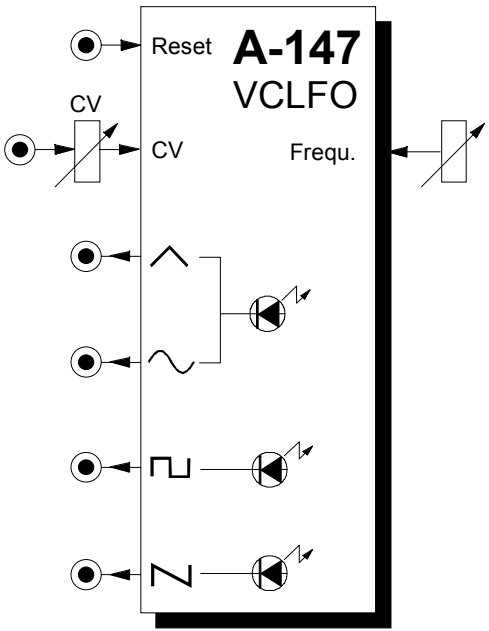

1. Introduction

Module **A-147 (VCLFO)** is a **voltage controlled low frequency oscillator,** which can produce cyclical control voltages over a 0.01Hz to 50Hz frequency range.

The VCLFO can be patched as a **modulation source** for a wide range of modules (for instance, modulation of VCO pulse-width or frequency, VCF cut-off frequency, VCA amplitude modulation) and as a provider of repetitive or clock voltages (for instance to drive the A-161 clock sequencer).

Four waveforms are available: **triangle, sine, square,** and **falling sawtooth waves**.

The VCLFO's frequency can be controlled by hand, but also by voltage control.

You can sync the VCLFO to another waveform by connecting the other waveform (eg another LFO) to the VCLFO's reset input.

2. Overview

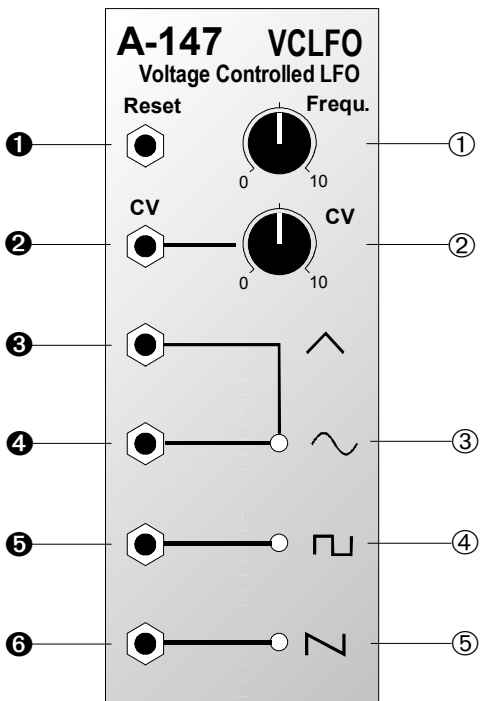

Controls and indicators:

①	**Frequ.** :	Manual frequency control
②	**CV** :	Attenuator for the voltage at input ❷
③	**LED** :	Frequency indicator for the triangle and sine waves at outputs ❸ and/or ❹
④	**LED** :	Frequency indicator for the square wave at output ❺
⑤	**LED** :	Frequency indicator for the sawtooth wave at output ❻

In- / Outputs:

❶	**Reset** :	Reset input for syncing the VCLFO
❷	**CV** :	Control voltage input
❸	:	Triangle wave output socket
❹	:	Sine wave output socket
❺	:	Square wave output socket
❻	:	Sawtooth wave output socket

3. Controls and indicators

① Frequ.

This control sets the **frequency** of the VCLFO in a range from 0.01 Hz (one cycle every 100 seconds) to 50 Hz (50 cycles a second).

☞ The actual LFO frequency is determined by a combination of manual control and any voltage patched into CV input ❷ .

② CV

Use **Attenuator** ② to set the level of the voltage at CV input ❷ affecting the VCLFO frequency.

③ LED ... ⑤ LED

LEDs ③ to ⑤ indicate the frequency and voltage state of the LFO signals at their respective outputs.

☞ If the LFO frequency is higher than about 15 to 20 Hz, our persistence of vision means that the LEDs look permanently on.

4. In- / Outputs

❶ Reset

A gate pulse entering the **reset input socket** ❶ enables the VCLFO to be **synchronised** with another oscillator.

This means that the waveforms instantly go to their zero-point, and start from there (see Fig. 1). In the case of the triangle and sine waves, that's 0 V; with the square wave it's about +5 V and the sawtooth it's at half its maximum (about +3.5 V).

❷ CV

Socket ❷ is the **voltage control input** for LFO frequency. The voltage at this input is added to whatever voltage is set on the manual control ①. The level of CV input ❷ can be adjusted with the Attenuator ②.

❸ ⋀

This socket outputs a triangle wave, whose frequency is indicated by LED ③ (amplitude roughly ± 5 V).

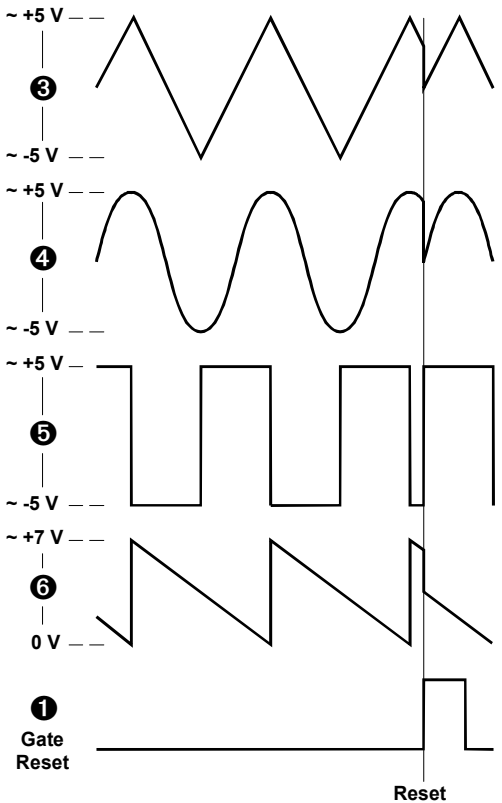

Fig. 1: How sync affects the waveforms

❹ ∿

This socket outputs a **sine wave** (amplitude range roughly ± 5 V), whose frequency / voltage state is indicated by LED ③ .

❺ ⊓

This socket outputs a **square wave** (amplitude roughly ± 5 V), whose frequency / voltage state is indicated by LED ④.

❻ ⋀

This socket outputs a **falling sawtooth wave** (amplitude roughly +7 V) whose frequency / voltage state is indicated by LED ⑤.

☞ In contrast to the A-145 standard LFO, the sawtooth is the identical frequency to the other waveforms (while the A-145 sawtooth is double the others' frequency).

5. User examples

An LFO can be used for all sorts of different modulations:

- **VCLFO - VCA**
  Modulation of the VCA gain produces **tremolo.**
- **VCLFO - VCF**
  Modulation of the cut off frequency produces cyclical changes in tone colour **(wah-wah).**
- **VCLFO - VCO (PWM)**
  Pulse width modulation causes cyclical changes in **tone colour.**
- **VCLFO - VCO (FM)**
  Pitch modulation produces **Vibrato**.

All the above refers to modulation in the **sub-audio range**. With modulation at audio frequencies (the low end of which the VCLFO can just get to), further changes occur in the sound spectrum. Look at the examples and suggestions in the manuals of the respective modules.

Simulating string vibrato

The patch in Fig. 2 shows a **string vibrato simulation**, copying the common guitar or violin playing technique, in which the finger applying the vibrato moves parallel to the fingerboard, in an oscillation of varying speed, to produce a pleasing and natural frequency modulation.

In this patch, the VCO is modulated by the VCLFO (with the VCO's CV input attenuator set to a low level).

While the key is held down on the keyboard, the VCLFO's frequency increases thanks to the control voltage from ADSR 1; at the same time, the volume decreases, thanks to the control voltage patched from ADSR 2 to the VCA.

Instead of ADSR 1, whose control voltage is raising the frequency of the VCLFO, and thus the speed of the vibrato, it's possible to use a MIDI interface (for instance an A-190 or A-191) and use aftertouch to provide the control voltage to the VCLFO.

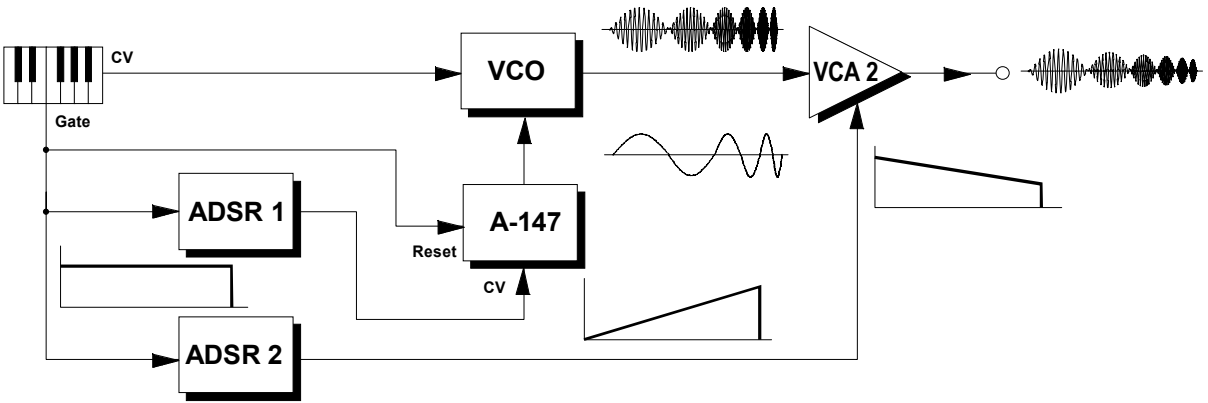

Fig. 2: Simulation of string vibrato

Integrating the VCLFO into a MIDI system

Unlike the A-145 and A-146 LFOs, the A-147's frequency can be voltage controlled.

This above all gives you the chance to use a MIDI-CV interface (such as the A-190 or A-191) and use your chosen controller to **adjust the VCLFO frequency via MIDI**.

That makes the LFO frequency in effect programmable, and also naturally means that you can control it while playing in real time.

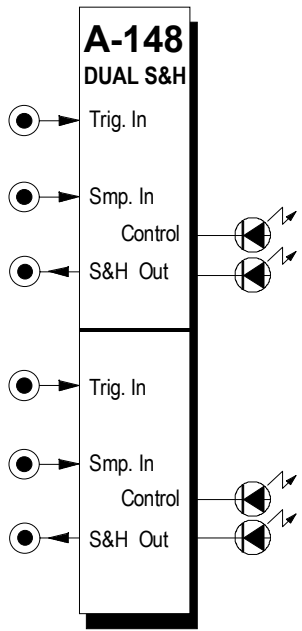

1. Introduction

Module **A-148 (Dual S&H)** has two identical sample & hold modules, designed to produce 'staircase' voltages.

The signal present at the **sample input** (voltage range -8V...+8V) is sampled at a rate set by the signal at the **trigger input**, and held at that voltage at the S&H output.

The exact shape of the staircase depends on the sort of waveform at the sample input: NOISE or RANDOM signals produce random patterns; an LFO produces rising or falling staircase patterns.

Two **LEDs** for each S&H indicate the voltage (positive or negative) of the sampled signal.

2. Overview

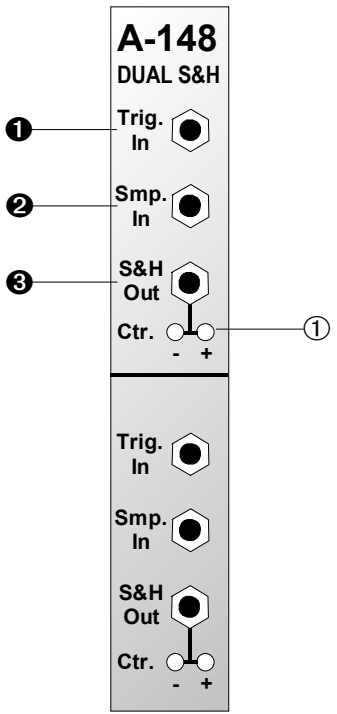

Indicators:

① **LEDs**: sampled voltage status indicators

In / Outputs:

❶ **Trig In** : Input for trigger signal

❷ **Smp In** : Input for signal to be sampled

❸ **S&H Out** : Output for sampled (and held) voltage

3. Indicators

① LEDs

These LEDs give a visual indication of the voltage level of the sampled and held signal (**- LED**: negative voltages, **+ LED**: positive voltages).

4. In / Outputs

❶ Trig In

The trigger input signal decides the rate at which the sampling takes place. Triggering takes place at the leading edge of the waveform (see arrows in Fig. 1), so the width of the pulse isn't important.

❷ Smp. In

Socket ❷ is the **sample input,** where the signal to be sampled is patched in. The signal fed into this socket has to be in the range -8V...+8V. For voltages beyond this range the S&H function will not work any longer. But the module cannot be destroyed as long as the voltage is in the range -12V...+12V. And that is the maximum voltage output from any A-100 module. Consequently within the A-100 no damage is possible.

❸ S&H Out

The 'sampled and held' voltage is available at the **S&H output** (see Fig. 1).

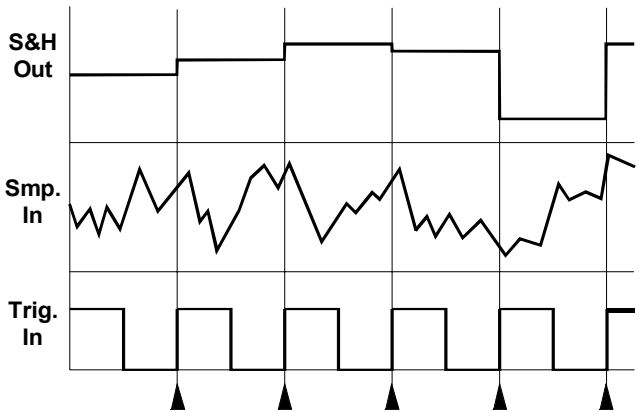

Fig. 1: S&H module signal diagram

5. User examples

Random arpeggios

In the example in Fig. 2, an A-118 is used in conjunction with the A-148 to produce random voltages from the random output of the A-118. An LFO triggers the S&H module, so that with every oscillation of the LFO a new random voltage is output to the VCO's CV input.

If you patch an A-130 VCA in before the VCO, you can adjust the Gain and Out amounts to restrict the frequency range of the random voltages to whatever you want.

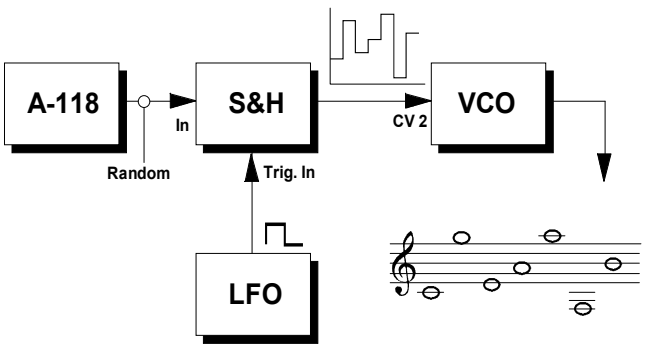

Fig. 2: Random arpeggios

You can use the same basic set-up as in Fig. 2, but patch the S & H voltage output to the CV input of a filter set to high resonance, for some interesting rhythmic timbral changes (see page 6).

Glissando

In Fig. 3 an A-148 produces a **staircase voltage.**
The pitch CV output from a keyboard is patched into an A-170 Slew Limiter. An A-148 triggered by the rising edge of an LFO samples the output from the slew limiter, and produces a staircase voltage which in turn controls a VCO's pitch.
Playing two notes, particularly widely spaced ones, produces interesting glissandi.

It's important to adjust the slew limiter's time setting and the LFO's frequency to achieve the right speed and number of notes in the glissandi.

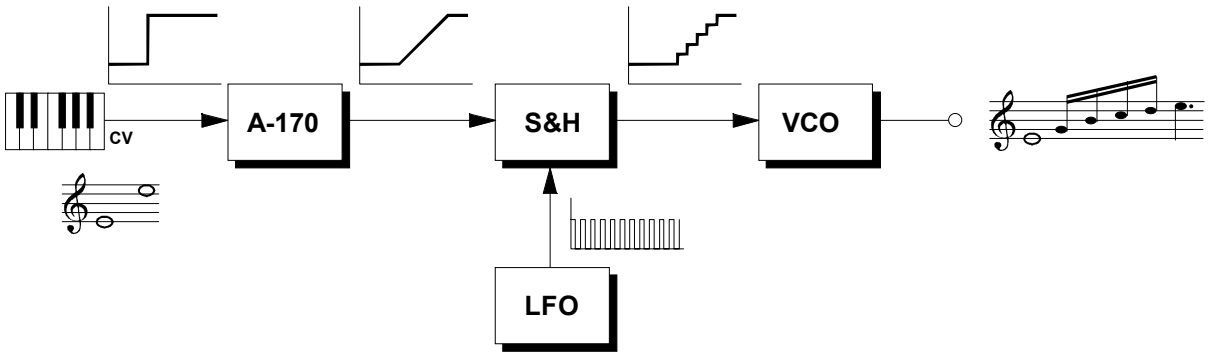

Abb. 3: Glissando

If you like you can patch the gate signal to the reset input of the LFO, so that its waveform starts at the beginning for each note.

Instead of an LFO, you can also use the MIDI-Clock from a MIDI-CV interface. That will produce glissandi synced to MIDI.

Random filter settings per note

With the patch in Fig. 4, every time a keyboard gate voltage is received, a new random filter CV is sent out. For best results, adjust the **resonance** to a **high** setting.

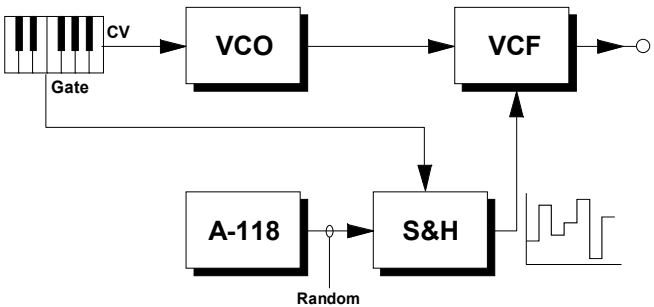

Fig. 4: keyboard gate triggering random filter settings

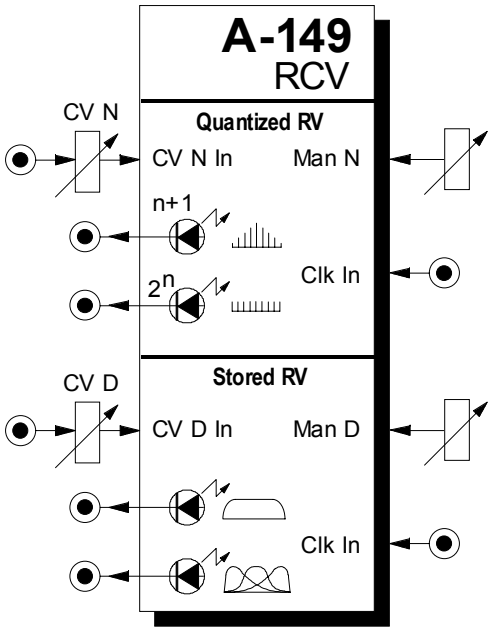

Remark: The A-149-1 can be expanded by the **A-149-2** module (8 digital random outputs with LED displays)

1. Introduction

Module **A-149-1** is a **Random Control Voltage Source** based on the idea of Don Buchla's "**Source of Uncertainty 265/266**" modules. It has available **4 analog random voltages,** that are generated in different ways.

The ***Quantized Random Voltages*** section has available the outputs ***N+1*** and ***2^N States***. **N** is an integer number in the range 1...6 that can be adjusted manually (Man N) and by an external control voltage CVN. The voltage steps are 1/12 V for the 2^N output (i.e. semitone intervals) and 1.0 V for the N+1 output (i.e. octave intervals).

The ***Stored Random Voltages*** section has available an output with ***even voltage distribution*** with 256 possible output states and another output with ***adjustable voltage distribution probability.*** The distribution of this output can be adjusted manually (Man D) and by an external control voltage CVD. The voltage range is 0...+5 V for both stored random outputs.

The rising edge of the corresponding **Clock input** signal triggers a new random voltage value at the outputs.
Each output is equipped with a **LED** that displays the current output voltage.

2. Overview

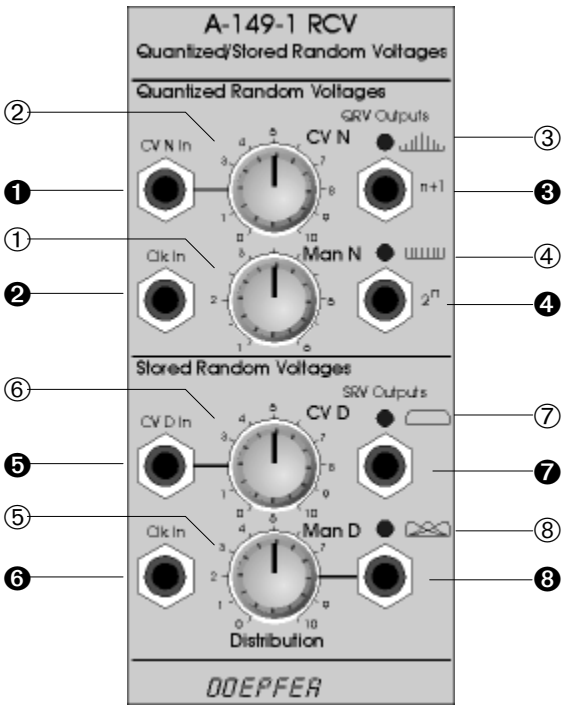

Controls and Indicators:

① **Man N** : manual control of “N”

② **CV N** : attenuator for CVN at input ❶

③, ④ **LED** : display for output ❸ resp. ❹

⑤ **Man D** : manual control of distribution "D"

⑥ **CV D** : attenuator for CVD at input ❻

⑦, ⑧ **LED** : display for output ❼ resp. ❽

In - / Outputs:

❶ **CV N In** : CV input for “N”

❷ **Clk In** : clock input for Quantized RCV section

❸ **n+1** : N+1 states output

❹ **2^n** : 2^n states output

❺ **CV D In** : CV input for distribution “D”

❻ **Clk In** : clock input for Stored RCV section

❼ : output with equal probability distribution

❽ : output with adjustable probability distribution (D)

3. Controls

3.1 Quantized Random Voltages

① Man N

This is the manual control for the integer **number N** in the **range 1 to 6.** It defines the **number of possible states** at the outputs ❸ and ❹:

	Possible states of	
N	**Output n+1**	**Output 2^n**
1	2	2
2	3	4
3	4	8
4	5	16
5	6	32
6	7	64

Remark:

As N increases **n+1** increases **linear** too but **2^n increases exponentially.**

☞ The **final value of N** is the sum of the manual control ① and the external (attenuated) control voltage applied to input ❶.

② CVN

The external control voltage CVN fed into input ❶ is attenuated with this control.

③ LED • ④ LED

The brightness of each LED is proportional to the output voltage at the corresponding output ❸ resp. ❹.

3.2 Stored Random Voltages

⑤ Man D

This is the manual control for the **probability distribution** of the **256 states** appearing at output (.

With the control set fully counterclockwise most of the random voltages will be low magnitude but even medium and high magnitude voltages may appear but with smaller probability. As the control is turned to the right (or a positive control voltage appears at the CVD input) the distribution moves through medium to high magnitude voltage probability. The symbol at the lower jack ❸ socket shows this coherence graphically (see also fig. 1).

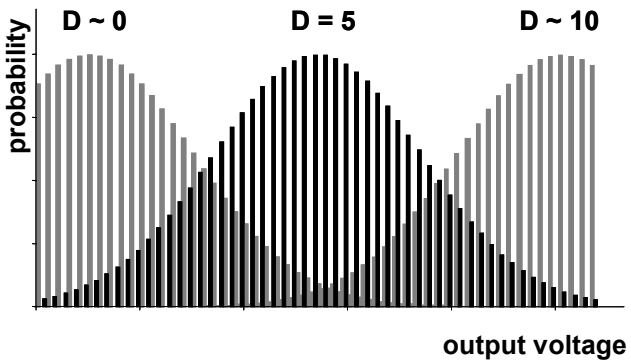

Fig.1: Probability distribution for different settings of "D"

☞ The **final value of D** is the sum of the manual control ⑤ and the external (attenuated) control voltage applied to input ❺.

⑥ CV D

The external control voltage CVD fed into input ❽ is attenuated with this control.

⑦ LED • ⑧ LED

The brightness of each LED is proportional to the output voltage at the corresponding output ❼ resp. ❽.

4. In- / Outputs

4.1 Quantized Random Voltages

❶ CV N In

This socket is the **Control Voltage input** for the parameter **"N"**.

❷ Clk In

This socket is the **Clock input** for the Quantized Random Voltages section. Each rising edge of this signal causes the generation of a new random voltage at the outputs ❸ resp. ❹. Any clock or gate signal can be used to control this input.

❸ n+1

This socket outputs the random voltage with **n+1 states**. The **voltage range** for this output is **0 to +5 V**, the **voltage steps** are **1.0 V** (i.e. 1V quantization). This corresponds to octave intervals when used to control the pitch of a VCO.

❹ 2^n

This socket outputs the random voltage with **2^n states**. The **voltage range** for this output is **0 to +5.25 V**, the **voltage steps** are **1/12 V** (i.e. 1/12 V quantization). This corresponds to semitone intervals when used to control the pitch of a VCO.

4.2 Stored Random Voltages

❺ CV D In

This socket is the **Control Voltage input** for the **probability distribution "D"**.

❻ Clk In

This socket is the **Clock input** for the Stored Random Voltages section. Each rising edge of this signal causes the generation of a new random voltage at the outputs ❼ resp. ❽. Any clock or gate signal can be used to control this input.

❼ • ❽

These sockets output the random voltages of the Stored Random Voltages section. Socket ❼ is the output with **equal probability distribution**, socket ❽ outputs the voltage with **adjustable distribution "D"**. The **voltage range** for both outputs is **0 to about +5.3 V**, the **voltage steps** are about **1/48 V** (i.e. 1/48 V quantization). This corresponds to about 1/4 semitone intervals when used to control the pitch of a VCO.

5. User examples

The **Doepfer web site** www.doepfer.com shows some **typical examples** of the A-149-1, including sound examples in the mp3 format. Even more details concerning the technical realization of the module can be found. An excellent description of several applications of random voltages like those generated by the A-149-1 can be found in the Allen Stranges "Electronic music - systems, techniques and controls" from page 82. The examples in this book are based on Don Buchla's modules 265/266 but are valid for the A-149-1 too.

The following patch is taken from this book and shows how to create very complex permanently changing sound structures by means of the A-149-1 in combination with the voltage controlled LFO A-147 and some additional standard modules (VCO, VCF, VCA, ADSR):

A high magnitude voltage at the N+1 output of the A-149-1 causes a high VCO pitch and simultaneously sets the value of N higher so that the next pitch is taken from a greater range of possibilities. If the N+1 output is low the VCO pitch will be low too and sets the value of N so that the next pitch will have a more restricted range of possibilities. Simultaneously the 2^n output controls the frequency of the filter and the

tempo of the VCLFO A-147. Thus as the range of pitch selection increases the number of possible spectral ranges becomes exponentially (or geometrically) greater. As the tempo of the VCLFO is controlled by the 2^n output too, bright sounds are accompanied by longer events, longer events are accompanied by greater range pitch range possibilities and the number of of range probablities for pitch selection is correlated exponentially. This tail-chasing configuration may last a few hours (to obtain Allen Strange's original patch a voltage inverter A-175 has to be inserted between the 2^n output and the control input of the VCLFO as the CV input of A-147 controls the tempo rather than the period).

More examples with random voltage sources can be found in Allen Strange's book from page 80 (e.g. the "Dream machine" on page 85).

Some additional ideas:

- Use the RND Clock output of an **A-117** Digital Noise Generator as clock input for the A-149-1 to increase the randomness of events.
- Use the Quantizer module **A-156** to obtain more restricted pitch voltages (e.g. only notes from major/ minor scale/chords)
- Combine the A-149-1 with a A-155 sequencer (common clock) to obtain random envelopes (A-142), timbre (filters), loudness (VCA) or stereo position (VC panning A-134), frequency shifting (A-126)

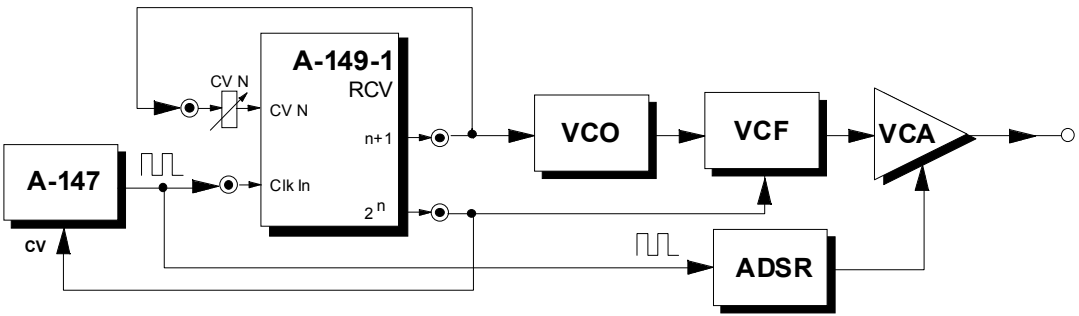

Fig. 2: "Random patch" adapted from Allen Strange's book "Electronic music - systems, techniques and controls"

1. Introduction

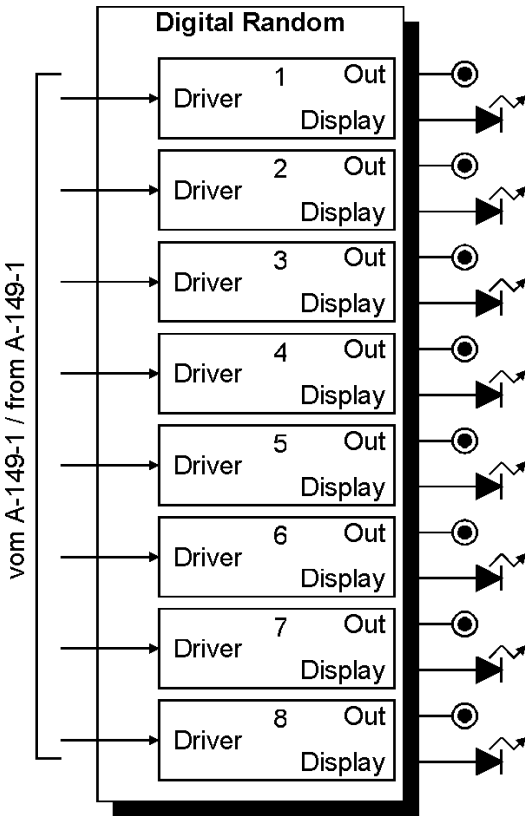

A-149-2 is an extension module for the random voltage generator A-149-1. It makes available 8 digital random voltages (i.e. only low/high states like a gate signal).

The outputs are controlled by the "Quantized Random Voltages" section of the assigned A-149-1 and correspond to the 8 digital outputs of the shift register that is used to generate the Quantized Random Voltages (for detailes please refer to the A-149-1 description).

As the alteration of the A-149-2 outputs is clock controlled by the Clock Input of the "Quantized Random Voltages" section of the A-149-1 the A-149-2 can be used to create random rhythmical sequences.

Module A-149-2 requires module A-149-1 and has to be assembled next to the A-149-1 into the A-100 frame.

2. Overview

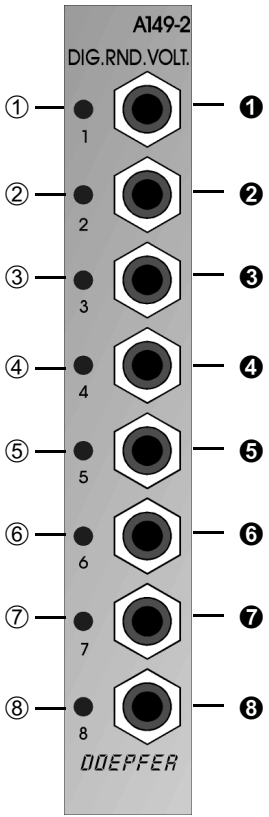

Controls:

①... ⑧ (**LEDs)**: Display for each output

Outputs:

❶ ... ❽ **(sockets)**: Digital outputs

3. Controls

①...⑧ (LEDs) / ❶...❽ (sockets)

At the sockets ❶...❽ the 8 random digital outputs are available. The output levels are ~ 0V (low state) resp. +12V (high state).
Each positive clock transition of the "Quantized Random Voltages" section of the A-149-1 causes a new combination of the A-149-2 output states. The outputs reflect the digital states of the shift registers used in the A-149-1 to generate the random voltages. Details about this subject are available in the A-149-1 manual and on our web site www.doepfer.com where the method of random voltages generation with the A-149-1 is described in detail.
As the level changes are triggered by the QRV clock the A-149-2 outputs have a timing correlation with the clock signal and can be used e.g. as random gate or trigger signals with the level changes in sync with the clock.

As the level changes are random even no level change is possible for a certain output (i.e. the output remains low or high) as these four level changes are possible:

- low → low
- low → high
- high → low
- high → high.

4. User Examples

not yet ready

Appendix: Connection A-149-1 – A-149-2

Module A-149-2 (Digital Random Voltages) is delivered with two 10 pin ribbon cables connected to two pin headers on the A-149-2 pc board:

1. One of the ribbon cables is equipped with a 10 pin female connector on one end and a 16 pin female connector on the other side. The 10 pin female connector is connected in the factory to the pin header labelled "JP1" on the A-149-2 pc board. This is the bus connection cable and the 16 pin female connector has to be connected to a free pin header of the A-100 bus board. Pay attention to the right polarity (red wire = bottom).

10 pin female connector → JP1 / A-149-2

16 pin female connector → bus board

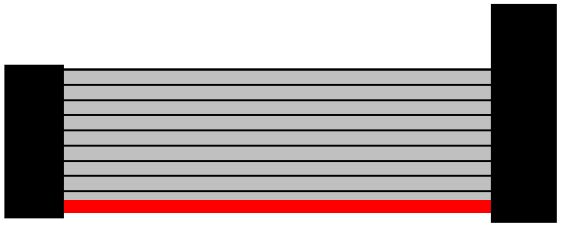

red wire = bottom

Please refer to the A-100 user's manual (introduction) for details concerning correct bus cable connection.

2. The second ribbon cable is equipped with 10 pin female connectors on both ends. One of the female connectors is connected in the factory to the pin header labelled "JP2 TO A-149-1 EXPANSION CONNECTOR" on the A-149-2 pc board. The second female connector of this cable is used to establish the connection between A-149-2 and A-149-1. This female connector is put on the pin header labelled "JP5 EXPANSION" on the main board of the module A-149-1. For both modules the cable has to be the same polarity (i.e. red wire to bottom for both modules).

10 pin female connector → JP5 EXPANSION / A-149-1

10 pin female connector → JP2 TO A-149-1 EXPANSION CONNECTOR / A-149-2



red wire = bottom

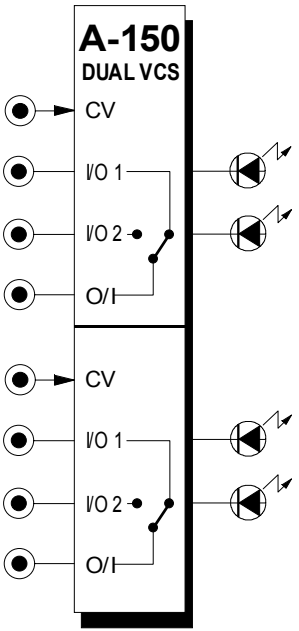

1. Introduction

Module **A-150 (Dual VCS)** contains two separate **voltage-controlled switches**.

Each switch has a **control voltage input**, a **common Out / Input**, and two **In / Outputs**. The switches are **bi-directional:** they can work in both directions, so can connect one input to either of two outputs, or either of two inputs to one output. Voltages in the range -8V...+8V at the O/I resp. I/O sockets can be processed by the module.

Two **LED**s show which in / output is **active** (ie. which is connected to the common out / input).

From about March 2004 a new version of the A-150 is available. This allows the full A-100 voltage range -12V...+12V for the voltages at the O/I resp. I/O sockets. The new version can be identified at the pc board label "A-100 SYSTEM A-150 DUAL VC SWITCH VERSION 2" near the bus connector at the pc board edge.

2. Overview

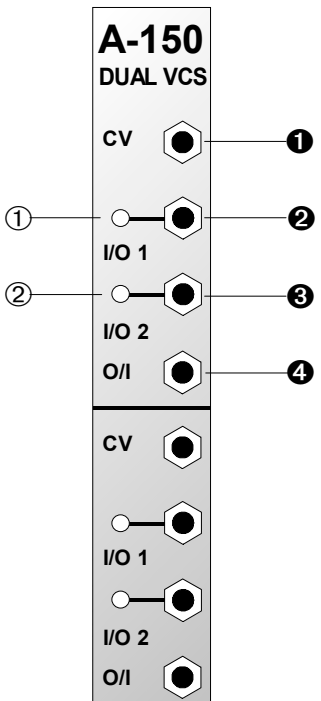

Indicators:

① **LED**: indicator for in / output ❷

② **LED**: indicator for in / output ❸

In / Outputs:

❶ **CV** : input for digital control voltage

❷ **I/O 1** : in / output 1

❸ **I/O 2** : in / output 2

❹ **O/I** : common out / input

3. Indicators

① LED ... ② LED

LEDs ① and ② serve as status indicators, to show which of the two in / outputs ❷ and ❸ is at that moment connected to the common out / input ❹.

4. In / Outputs

❶ CV

Socket ❶ is the input for the **digital control voltage,** whose level determines the switch state (see Fig. 1):

- CV low (< ~3.6 V): O/I ---- I/O 1
- CV high (> ~3.6 V): O/I ---- I/O 2

If a high frequency control voltage is used for switching, audio frequency modulation results (see Fig. 4 on page 5).

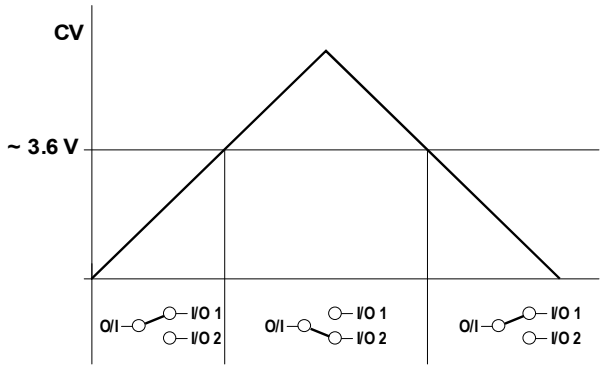

Fig. 1: The A-150's switching behaviour

❷ I/O 1 • ❸ I/O 2

These sockets are the **in / outputs**.

❹ O/I

Socket ❹ is the **common out / input**. Depending on the level of control voltage at input ❶ it's connected to socket ❷ or ❸ (see Fig.1).

☞ The switches are **bi-directional**: that is, two inputs can be connected to one output, and vice versa. The particular arrangement of inputs / outputs will always be clear from looking at what is patched to which socket.

☞ Any signal from -8 V to +8 V can be controlled by the A-150. Voltages less than -8V or more than +8V will lead to malfunction of the module ! It is possible to modify the module so that voltages in the range 0...+12V can be processed. You find a modification of the A-150 for signals in the range 0...+12V on our web site www.doepfer.com in the FAQ section (click to the FAQ button on the left side of the page).

☞ Another solution for signals beyond -8V resp. +8V is to attenuate and/or to change the offset voltage of the signal. The A-129/3 attenuator/ offset generator can be used for both purposes.

☞ From about March 2004 a new version of the A-150 is available. This allows the full A-100 voltage range -12V...+12V for the voltages at the O/I resp. I/O sockets. The new version can be identified at the pc board label "A-100 SYSTEM A-150 DUAL VC SWITCH VERSION 2" near the bus connector at the pc board edge.

5. User examples

Switching filter characteristics

In the example in Fig. 2, with the help of an A-150, a signal can be switched between a 12dB and 24dB low pass filter.
The control voltage $\mathbf{CV_S}$ can for instance come from the CV output of a MIDI-CV interface (e.g. A-191), so that, for instance, a MIDI controller could be assigned to switch between filter types.

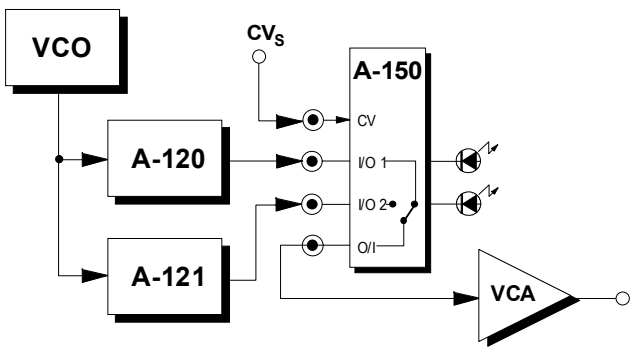

Fig. 2: Switching between two filters with the A-150

Switching between modulation sources

In the example in Fig. 3, the A-150 switches between two filter cut-off modulation sources. The control voltage **CV_S** (for instance from a MIDI controller) determines whether the **ADSR** (when **CV_S = 0 V**) or the output from the mod wheel **CV_M** (when **CV_S = +5 V**) controls the cut-off frequency of the filter.

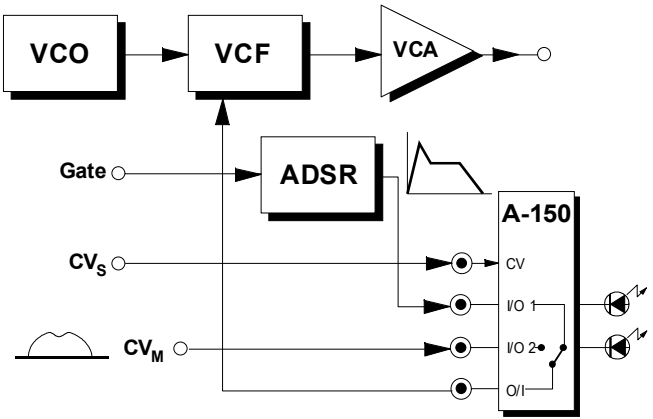

Fig. 3: Switching between modulation sources

Switching by audio-range signals

In Fig. 4, the A-150 is set up to switch the audio output of a VCO. The switching voltage is provided by the VCO's square wave output, with the result that at each half cycle, synchronised to the VCO frequency, the waveform changes to sawtooth. Try variations on this patch, with an independent VCO or LFO providing the switching voltage, different frequencies, etc..

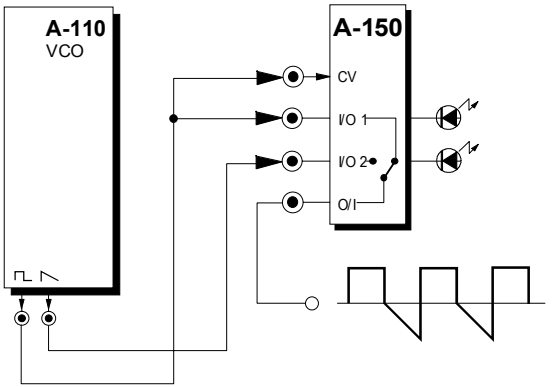

Fig. 4: Audio-range switching of an audio signal

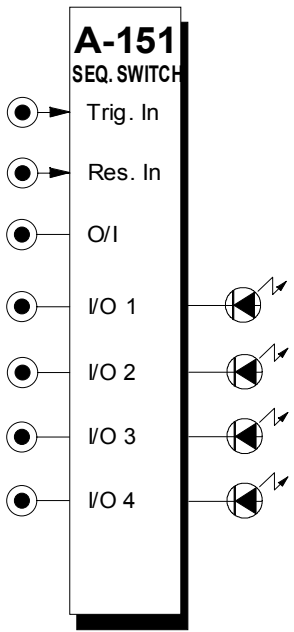

1. Introduction

Module **A-151 (Quad Sequential Switch)** is like an electronic four-position rotary switch.
It includes **trigger and reset inputs**, **four in / outputs**, and a **common out / input**.
Each time a pulse is received at the trigger input socket, the common out / input is connected to the next in / output. After the fourth in / output, the next trigger makes it step back to the first again, and so on (see Fig. 1).
Voltages in the range -8V...+8V at the O/I resp. I/O sockets can be processed by the module.
Four **LED**s indicate the **active in / output** (ie. the one that is connected to the out / input at any particular time).
A positive pulse at the r**eset input** switches the out / input immediately back to the first in / output (see Fig. 1).

Version 2 of the module (from about 2005) is equipped with an additional switch that is used to set the number of steps to 2, 3 or 4. On top of that the new versions allows to switch audio or control signals within the full A-100 voltage range (i.e. -12V...+12V).

2. Overview

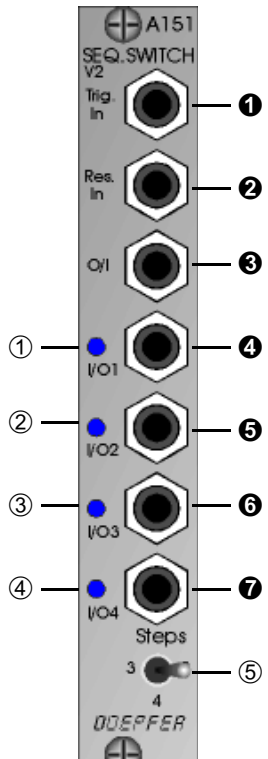

Indicators:

①	**LED**:	Indicator for in / output ❹
②	**LED**:	Indicator for in / output ❺
③	**LED**:	Indicator for in / output ❻
④	**LED**:	Indicator for in / output ❼
⑤	**Steps**:	Switch for the limitation of the number of addressed steps to 2, 3 or 4 (available only in version 2)

In / Outputs:

❶	**Trig. In** :	Input for trigger pulse
❷	**Res. In** :	Input for reset pulse
❸	**O/I** :	Common out / input
❹	**I/O 1** :	In / output 1
❺	**I/O 2** :	In / output 2
❻	**I/O 3** :	In / output 3
❼	**I/O 4** :	In / output 4

3. Indicators

① LED • ② LED • ③ LED • ④ LED

LEDs ① to ④ are the **status indicators**, showing which of sockets ❹ to ❼ is connected to the common out /input ❸ at any moment.

⑤ Steps

This switch is used to limit the number of addressed in/outputs to 2, 3 or 4. The switch is available on in version 2 of the module (about since 2005).

4. In / Outputs

❶ Trig. In

Socket ❶ is the A-151's **trigger input**. With each new pulse (at the rising edge), the common out / input is switched to the next in / output.

After stepping to the fourth in / output the next trigger pulse sends the common out / input back to the first in / output again (see Fig. 1).

☞ Don't forget that with a very fast repeating trigger, the switching process on the A-151 can produce audio-frequency modulation (see chapter 5, user examples).

❷ Res. In

If you want to over-ride the stepping sequence, and send the common out /input back to the first in / output, send a reset pulse to the **reset input ❷** (see Fig. 1). The rising edge of this pulse immediately resets the common out / input to the first in / output.

Using the reset input, you can create repeated sequences which switch between three inputs or outputs (❹ ⇨ ❺ ⇨ ❻ ⇨ ❹ ⇨ ❺ ⇨ ❻ ⇨ ❹...).

❸ O/I

Socket ❹ is the **common out /input**. Each time the A-100 is switched on, or a reset pulse is received, this socket is connected to the first in / output socket ❹ (see Fig. 1).

❹ I/O 1 • ❺ I/O 2 • ❻ I/O 3 • ❼ I/O 4

Sockets ❹ to ❼ are the **in / outputs**.

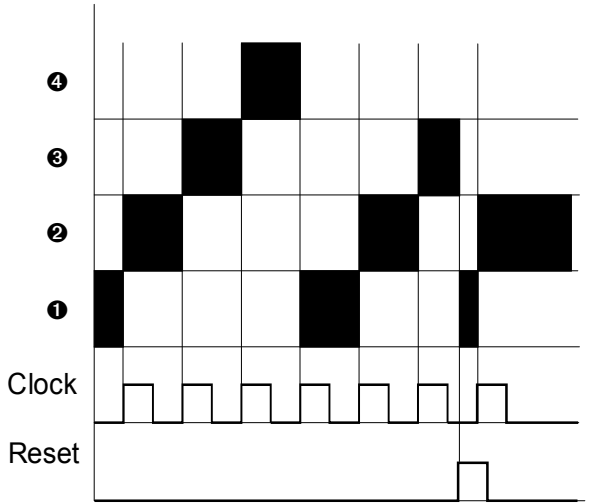

Fig. 1: How the A-151 switching works
(■ : in / output connected)

☞ The switches are **bi-directional**, so switching can take place from four inputs to one output, or four outputs to one input. Which process is happening at any one time will always be clear from looking at the modules connected.

☞ Any signal from -8 V to +8 V at the O/I resp. I/O sockets can be processed by the A-151. Voltages less than -8V or more than +8V will lead to malfunction of the module ! It is possible to modify the module so that voltages in the range 0...+12V can be processed. You find a modification of the A-151 for signals in the range 0...+12V on our web site www.doepfer.com in the FAQ section (click to the FAQ button on the left side of the page).

☞ Another solution for signals beyond -8V resp. +8V is to attenuate and/or to change the offset voltage of the signal. The A-129/3 attenuator/offset generator can be used for both purposes.

☞ From version 2 of the module (from about 2005) the full voltage range of the A-100 (i.e. -12V...+12V) can be switched without any modification. Version 2 can be identified with the additional switch ⑤ Steps.

5. User examples

Switching VCO waveforms

In the example in Fig. 2, every time a trigger pulse hits the A-151's trigger input socket, the VCO switches to a new waveform. Since very fast switching of the A-151 (by an LFO set to its fastest range, or even by a VCO) can produce audio frequency modulation - that is, changes so fast that the ear can't resolve them - the result is in effect a new waveform.

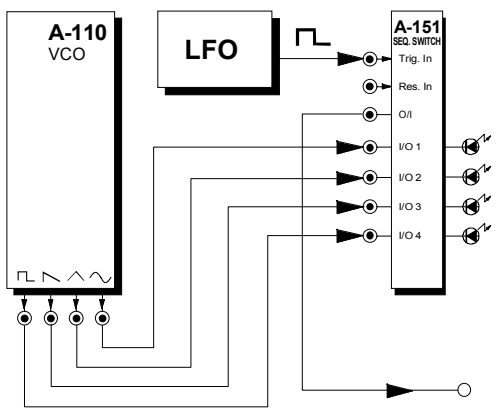

Fig. 2: Switching VCO waveforms

As an alternative to using an LFO or VCO to trigger the waveform sequencing, it's possible to get the VCO to trigger the switching itself. Simply connect the square wave output into the trigger input ❶ of the A-151.

Four-step tone sequencing

The patch in Fig. 3 on page 6 produces a four-step tonal sequence, with a different filter envelope for each of the four steps.

An LFO simultaneously triggers ADSRs 1 to 4 and the switch on the A-151, so that for each step the VCF is affected by a different one of the four envelopes.

ADSR 5 is also triggered by the LFO, and controls the VCA.

It's crucial to make the envelopes of all the ADSRs fit the LFO's speed.

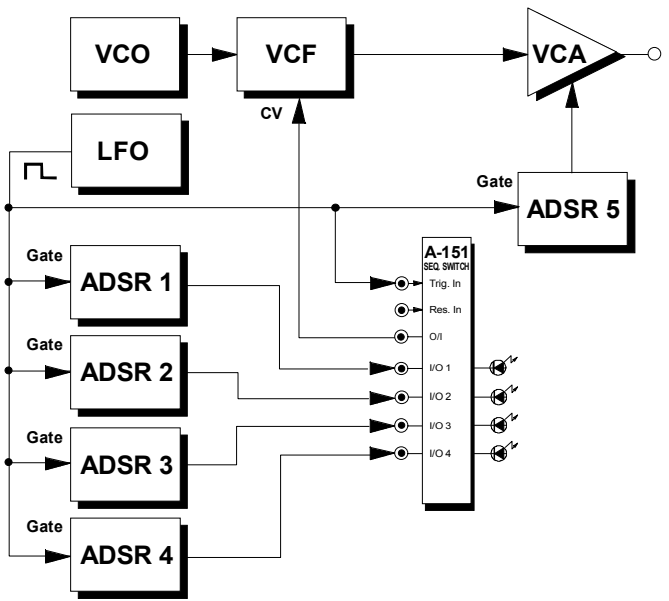

Fig. 3: Four-step tone sequencing

If you use a keyboard gate as the trigger instead of the LFO, each note played steps through to the next envelope.

Switching filter characteristics

With the patch in Fig. 4, you can use an A-151 to step through each of the types of output in the A-121 multimode filter, one step for each note played.

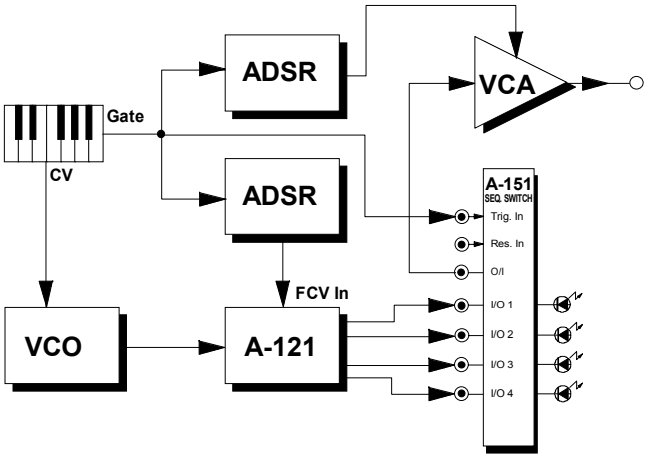

Fig. 4: Switching filter characteristics

1. Introduction

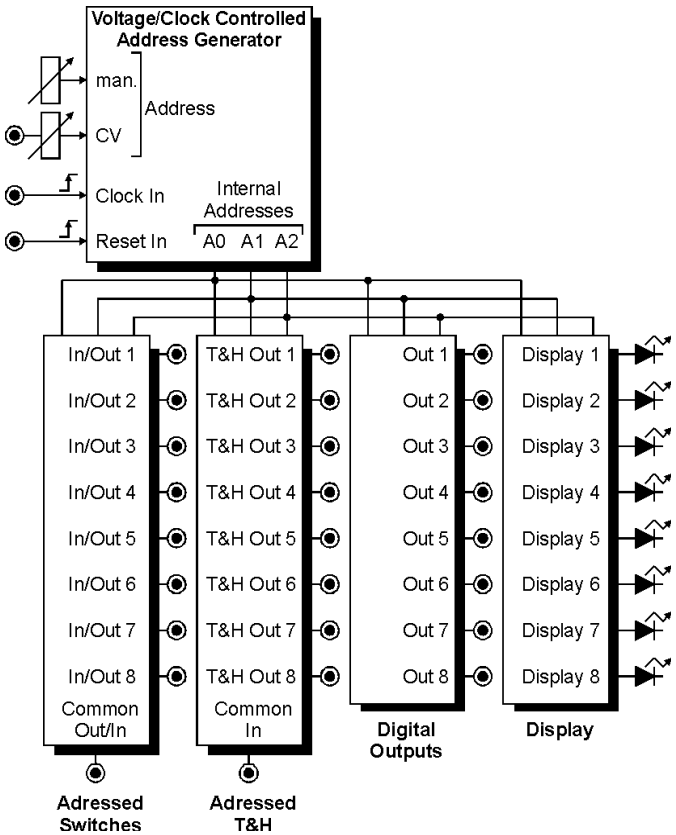

Module A152 is a useful switching and Track&Hold module. It combines three sub-units within one module:

- **1-to-8 multiplexer**
- **8-fold Track&Hold**
- **8-fold digital outputs unit**

The active step of the three sub-units can be controlled by an external **control voltage** (**CV addressed mode**) or via a **Clock/Reset** controlled **binary counter** (**clocked mode**). In this case the rising edge of each clock signal causes an advance to the next step. The rising edge of the reset signal resets to step 1.

The currently **active step** is displayed by a **LED**.

For the CV addressed mode a **manual control** and a **control voltage input** with **attenuator** is available.

The module can be used for a lot of switching and controlling functions in the A-100 system. Among other things the T&H section of the A-152 allows the emulation of the "**toggling T&H**" function of the Buchla module 266 "Source of Uncertainty".

2. Basic principles

The **sum of the voltages** coming from the manual address control and the CV input define the currently addressed step of the 3 sub-devices. An **address** in the **range 1...8** is generated by an internal analog-to-digital converter. Three **address signals** (**A0, A1** and **A2**) are used to address the sub-units **multiplexer**, **T&H** and the **digital output section with LED display**.

Alternatively the address signals A0, A1 and A2 can be generated by an internal **3 bit binary counter** that is controlled by the signals **clock** and **reset**. For this the the analog voltage applied to the analog-to-digital converter mentioned above has to remain unchanged as the **CV control** has **priority over the clock/reset control**.

Sub-device #1 is the **bidirectional 8-fold multiplexer** (nothing but an electronical 8-fold rotary switch). Bidirectional means that it works into both directions like a mechanical rotary switch. The common socket may work as an output that is connected to one of the 8 inputs that are e.g. connected to modulation or audio sources. But the common socket may even function as input. In this case the signal applied to the common socket is output to the currently addressed single socket.

Sub-device #2 is the **addressed 8-fold T&H**. The signal at the common T&H input is connected to the addressed T&H output. The addressed output follows the voltage applied to the common T&H input (track phase). As soon as another output is addressed the last voltage is stored (hold phase).

Remark: In contrast to the Sample&Hold (see S&H A-148) the output voltage follows (i.e. tracks) to the input voltage as long as the corresponding stage (1...8) is active. Just when the stage is deselected the last voltage is held. The S&H has only a very short track phase and picks out a sample of the input voltage within a very short time.

Sub-device #3 is the **digital output section**. The digital output of the currently addressed step turns to "high". All other digital outputs are low.

The digital output section also drives the LEDs.

3. Overview

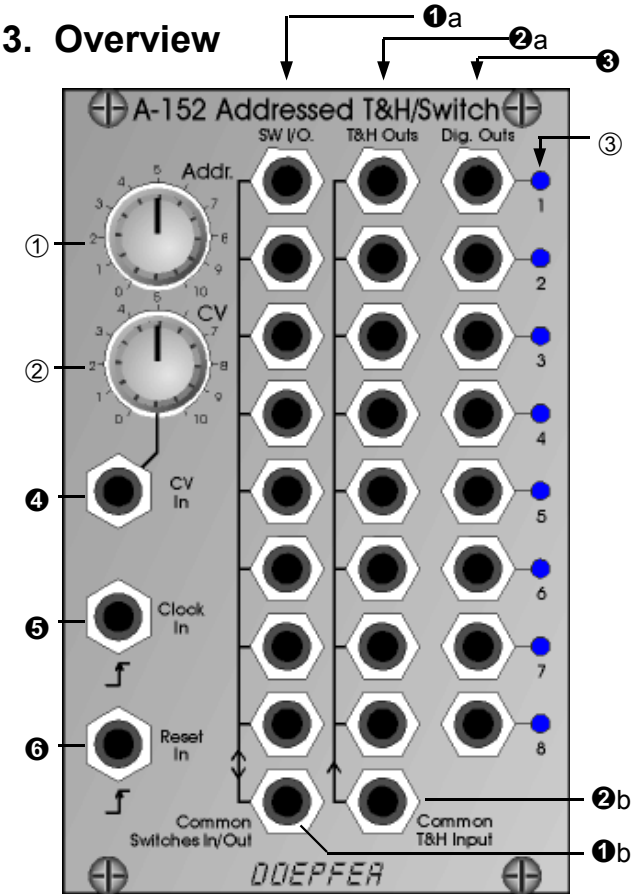

Controls:

① **Address**	manual address control
② **CV**	attenuator for address CV input ❹
③ **1...8**	LED display (8x)

Inputs / Outputs:

❶a SW I/O	single multiplexer inputs/outputs (8x)
❶b Common Switches In/Out	common multiplexer output/input
❷a T&H Outs	track&hold outputs (8x)
❷b Common T&H Input	common track&hold input
❸ Digital Outs	digital outputs (8x)
❹ CV In	address control voltage input
❺ Clock In	Clock input for the binary counter
❺ Reset In	Reset input for the binary counter

3. Controls / Inputs / Outputs

① **Address** (control)
② **CV** (control) / ❹ **CV In** (socket)

This group of elements is responsible for the **address** generation in the **voltage controlled mode**. Control ① **Adress** is used to adjust the address manually. The control voltage input ❹ **CV In** with the corresponding **attenuator** ② **CV** can be used to modulate the address by means of an external control voltage (e.g. ribbon controller A-198, Theremin A-178, joy stick A-174, ADSR, LFO, random voltage, sequencer and so on).
The required control voltage difference at socket ❹ is about 5V to reach all available addresses with attenuator ② set to it's maximum position.

❺ **Clock In** (socket) / ❻ **Reset In** (socket)

This group of elements is responsible for the **address** generation in the **clocked mode** with the internal binary counter. In this mode each **positive transition** (rising edge) of the signal applied to the **Clock** input ❺ triggers an advance to the next step. Any positive transition of the signal applied to the **Reset** input ❻ resets the counter to **step 1**.

Attention! If the module is be controlled by **clock** and **reset** signals the analog control voltage has to remain unchanged as the **CV control has priority over the clock/reset control**. E.g. simply turn the CV control ② fully counterclockwise (or make sure that no control voltage is applied to socket ❹) and do not touch the address control knob ①. But of course this overwriting behaviour can be used intentionally for special effects.

③ **1...8** (LEDs, 8x)

The currently addressed step of all sub-units is displayed with one of the LEDs.

❶a **SW I/O** (sockets, 8x)
❶b **Common Switches In/Out** (socket)

These sockets belong to the multiplexer sub-unit. The common socket ❶b is connected to the currently addressed single I/O socket ❶a that is displayed by the illuminated LED ③. The remaining seven single I/O sockets are open, i.e. at this moment they have no connection among each other or to the common socket ❶b.

The multiplexer works **bidirectional**. This means that it works into both directions like a mechanical rotary switch. The common socket may work as an output that is connected to one of the 8 inputs (which are e.g. connected to modulation or audio sources). But the

common socket may even function as input. In this case the signal applied to the common socket is output to the currently addressed single I/O socket.

Both **control voltages** and **audio signals can be processed** by the multiplexer unit. The voltage range of the in/outputs to be switched is the **full A-100 voltage range -12V....+12V**. All A-100 signals can be switched without any restrictions.

❷a **T&H Outs** (sockets, 8x)
❷b **Common T&H Input** (socket)

These sockets belong to the Track&Hold sub-unit. The common T&H input ❷b is connected to the currently addressed T&H output ❷a that is displayed by the illuminated LED ③. The active T&H output follows the voltage applied to the T&H input (track phase). As soon as another output is addressed the last voltage is stored (hold phase).

Only **control voltage**s can be processed by the T&H unit due to the holding capacitors of the T&H circuits. The T&H section is **not suitable for audio signals**.

The T&H section of the A-152 allows the emulation of the "toggling T&H" function of the Buchla module 266 "Source of Uncertainty". Only the first two T&H outputs of the A-152 are required for this application (digital output 3 has to be connected to the reset input).

❸ **Digital Outputs** (sockets, 8x)

These sockets belong to the digital output section. The digital output of the currently addressed step turns to "high" (i.e. about +12V) . It is displayed by the illuminated LED ③. All other digital outputs remain at low level.

The digital outputs can be used to reduce the number of addressed stages in the clocked mode. If the digital output 5 is connected to the reset input ❻ only steps 1...4 of the counter will be addressed.

Another application is the triggering of other A-100 modules (e.g. ADSR, LFO reset, clock divider/sequencer, trigger delay, analog sequencer and so on). For example the ribbon controller A-198 can be used to trigger 8 different devices one after another by moving the finger over the ribbon manual.

For logical connection of several digital outputs the logic module A-166 can be used (e.g. for simple rhythmic patterns).

To generate a short trigger signal from the gate-type digital outputs the trigger modifier A-165 is the right choice (each digital output remains in the "high" state while it is addressed, this is called a "gate-type" signal).

Normalling options

The common terminals of the multiplexer and the T&H section can be normalled in different ways, i.e. they can be pre-connected provided that no plugs are inserted into the corresponding sockets. For that purpose two single row pin headers with jumpers are available:

JP8: located on the pc board of the multiplexer unit (labelled "BOARD C SWITCHES") at the lower edge

JP7: located on the pc board of the T&H unit (labelled "BOARD B T&H") at the lower edge as well

There are two possibilities to set the jumpers of JP7 and JP8:

- JP8 below, JP7 towards the common T&H socket

In this case the common socket of the multiplexer unit ❶b is connected to the common input of the T&H unit ❷b provided that no plug is inserted into the common socket ❶b of the multiplexer unit. For both units T&H and multiplexer the same input signal is used (applied to the common input of the T&H unit ❷b). The eight single sockets of the multiplexer unit ❶a function as outputs in this case.

- JP8 top, JP7 away from the common T&H (factory setting)

In this case the common input of the T&H unit ❷b is connected to the common socket of the multiplexer unit ❶b provided that no plug is inserted into the common input of the T&H unit ❷b. This leads to two possibilities:

1. For both units T&H and multiplexer the same input signal is used. The signal is applied to the common socket of the multiplexer unit ❶b. In this case the eight single sockets of the multiplexer unit ❶a function as outputs.

2. No plug is inserted into the common socket of the multiplexer unit ❶b. In this case the single sockets of the multiplexer unit ❶a are used as inputs for the T&H with a separate input for each T&H output. Each single socket of the multiplexer ❶a works as input for the neighbouring T&H stage ❷a. In this case the eight single sockets of the multiplexer unit ❶a function as inputs.

If one or both jumpers are removed no normalling is active. We recommend to keep the jumpers for a later re-installation of the normalling option.

5. User Examples

Graphic VCO

The right picture shows the principle patch for a so-called graphic VCO. For a graphic VCO the waveform is determined by a sequence of voltage levels. Normally the levels are adjusted with faders and the fader positions represent the waveform. In the A-100 such a VCO is not available as we believe that the expenditure and costs do not correspond to the result. From our point of view the features of a graphic VCO are overestimated very often. But with the A-152 one has the tool to built a graphic VCO with a few additional modules only. And that's how it works:

The CV address input of the A-152 is connected to the output of a VCO (e.g. sawtooth or triangle output of an A-110 or A-111). The manual address control and the CV attenuator are adjusted so that just all 8 LEDs of the A-152 light up, i.e. that all 8 stages of the A-152 are addressed while the VCO passes through it's waveform (this is why only sawtooth/triangle/sine are suitable waveforms but not rectangle). The CV controlled address generator of the A-152 is able to work up to moderate audio frequencies. If different voltages are applied to the eight multiplexer inputs of the A-152 one obtains a graphic VCO signal at the common multiplexer output that has the same frequency as the VCO.

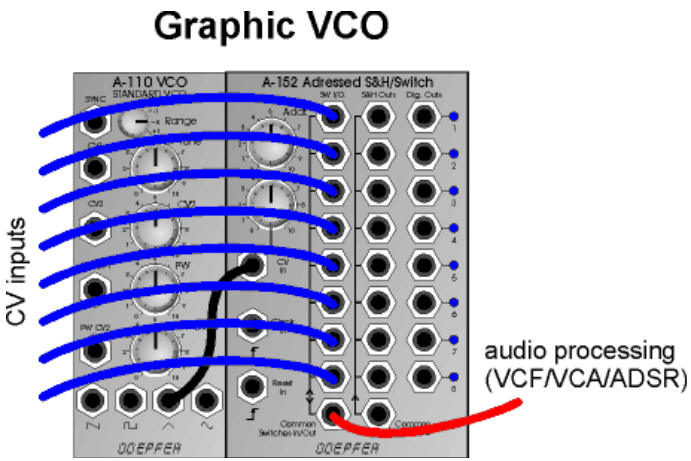

Here are some examples how to generate the eight voltages:

- 8 fixed voltages (e.g. from the CV source module A-176): This is the "classic" graphic VCO with manually adjustable values (for DIY's: 8 faders connected between GND and +12V could be used too)
- 8 automatically varying voltages (e.g. 8 LFO outputs from two A-143-3)
- 8 random analog voltages (e.g. random voltages from A-118 or A-149-1 or S&H A-148)
- 8 random digital voltages (e.g. A-149-2)
- or any combination of the above suggestions

For the last 3 examples the waveform changes more or less accidentally. If the A-149-1 resp. A-149-2 is used the waveform changes can be synced as for these modules the random voltages are triggered by a clock signal. Especially in combination with an A-155 a lot of interesting applications may result. E.g. the clock inputs of the A-149-1 can be controlled by the sequencer clock or a A-155 trigger row. In both cases the change to the next waveform is in sync with the sequencer.

If the triangle output of a VCO is used to control the A-152 only odd harmonics will occur as the graphic waveform is passed through symmetrically in both directions.

Mono-Poly-Konverter

The picture below shows an application of the A-152 that distributes a monophonic pitch control voltage (e.g. the CV of a sequencer, a MIDI-to-CV interface or a monophonic keyboard) into several polyphonic control voltages that are used to control several VCOs. And that's how it works:

The pitch CV is connected to the common input of the T&H unit. The positive transition of the corresponding gate signal indicates that a new CV is generated (e.g. by pressing a key on the keyboard or during the advance to the next sequencer step). The gate signal is used to

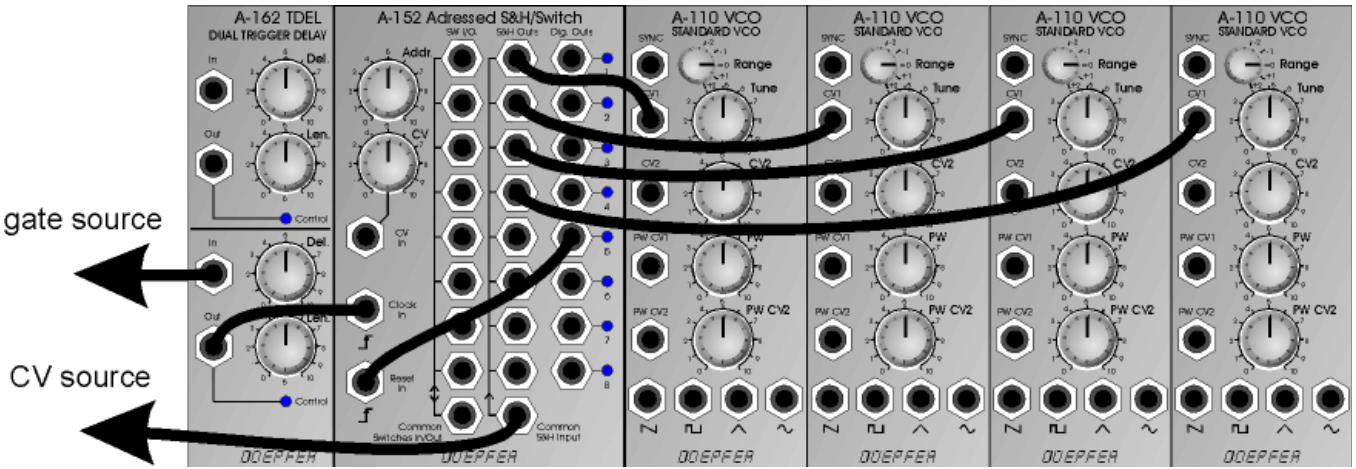

trigger the advance to the next address of the A-152. The trigger delay connected between the gate source and the clock input of the A-152 is required because of the timing between the positive transition of the gate signal and the CV change. The T&H has to take over and store the CV not before the CV is stable. Otherwise the result will not meet the expectations. As the time correlation between the gate transition and the CV change may vary the A-162 is used to solve problems that may arise from this. Ideally the gate transition and CV change happens exactly simultaneously, but "simultaneously" is a problem in the real world as there are always some delays in the micro/millisecond range that may cause problems (e.g. the MIDI-to-CV interface or sequencer of manufacturer #1 generates the gate transition 200us before the CV change but for manufacturer #2 the behaviour is reverse and the delay is 500 us). To avoid such problems the A-162 is used. First the trigger length is adjusted so that the A-152 triggers correctly. If the width is too short the A-152 may not trigger or the step advances are uneven. After that the delay time is adjusted so that the CV values appear sequentially at the T&H outputs of the A-152 as expected. Usually the A-162 settings will be close to the left-most positions of the controls for delay and length.

In the example the digital output five is connected to the reset input of the A-152 to limit the number of outputs to four.

The four VCO outputs can be mixed in an A-138 before the subsequent signal processing (VCF,VCA,ADSR ...). But even each VCO outputs can be processed separately. In this case the digital outputs of the A-152 may be used to trigger the envelope generators that are assigned to the corresponding VCO.

The number of outputs can be decreased or increased by connecting the reset input to another digital output.

A special case is the limitation to two outputs. This leads to the function of the toggling S&H unit of the Buchla module 266 Source of Uncertainty. The only difference is that the Buchla module contains two S&H instead of two T&H. If an A-148 S&H is connected between the CV source and the A-152 the functions are identically.

Another solution is to modify the A-152 so that the T&H section works as S&H. For details please refer to the DIY page on our web site www.doepfer.com.

7-fold Manual Ribbon Gate

The right picture shows an application of the A-152 in combination with the ribbon controller A-198. The position control voltage of the A-198 is used to address the A-152. If the manual address control and the CV attenuator are adjusted in the right way the position sensor of the A-198 covers the complete address range of the A-152 and a small share of the position range is assigned to one of the eight addresses of the A-152.
If the hold switch of the A-198 is set "off" the A-152 jumps to address 1 as soon as the finger is removed from the position sensor. As soon as the sensor is touched, one of the stages in the range 2...8 is addressed and the corresponding digital output turns to "high" - displayed by the corresponding LED. This leads to a 7-fold manual gate generator that can be operated like a percussion set. According to the position of the finger, that touches the position sensor of the A-198 one of the gate outputs of the A-152 is active. The gate outputs may be used to trigger percussive sounds stored in an A-112 sampler module or percussive patches based on other A-100 modules.

In principle the gate outputs can be used for any gate/ trigger/clock function in the A-100.

In the example the position CV is also patched to the common T&H input. At the T&H outputs control voltages

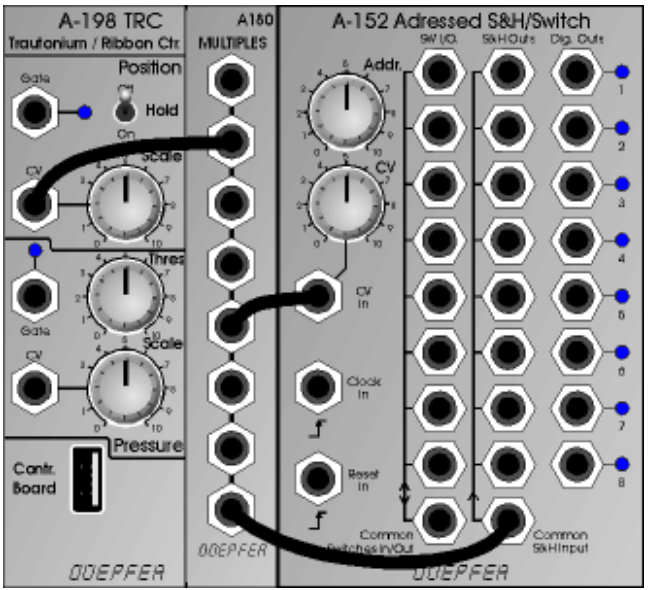

are available that follow the position CV of the A-198 in a certain range. As soon as the finger leaves the corresponding range the last voltage is stored.

The multiplexer unit can be used for additional switching functions (e.g. to connect different modulation or audio sources to a module).

1. Introduction

Module A-154 is a **supplement** to the **Analog/Trigger Sequencer A-155**. It offers a lot of new features that are not available in the basic control unit of the A-155. The A-154 is used to replace the control unit of **one or two A-155**, i.e. the section marked "Control" with Start / Stop / Step / Reset buttons and inputs in the upper left corner of the A-155 front panel. If the A-154 is used to control the A-155 the control section of the A-155 is put out of action.

These are the most important features of the A-154:

- **5 different running modes**: forward, backward, pendulum, random, CV controlled step adressing. All modes are available as **loop** or **one-shot**
- Manual and **voltage controlled selection** (with attenuator) of the **running mode**
- **5+1 LED display** for the 5 different current modes and one LED for loop/one-shot display
- **Manual** and **voltage controlled selection** (with attenuator) of **first and last step** of the sequence
- In the "**CV Controlled Step Address"** mode the First Step section is used to determine the active sequencer step (in this mode the first/last step feature is not available). Consequently manual and **voltage controlled selection of the active step** is possible
- Internal **voltage controlled clock generator** with manual and **voltage controlled** (with attenuator) **clock rate**, enables variable time length for each step, e.g. controlled by one of the analog rows of the A-155
- **Skipping** of steps, e.g. the gate row of the A-155 can be used to control the skipping of steps
- **LED display** of the clock signal
- Manual and **voltage controlled** (with attenuator) **pulse length** of the clock signal. This features enables **different gate length** (at the same clock rate) **for each step**, e.g. one of the CV outputs of the A-155 can be used to control the PW
- **One or two A-155** can be **controlled** from the A-154
- **8/16 step** mode: In combination with **two A-155** one can select between **parallel (8 steps)** or **serial operation (16 steps)**. The serial operation requires additional **voltage controlled switches** (e.g A-150)
- **Manual and voltage controlled selection** between "old" control unit of the A-155 and A-154 control (**A-154 Master** on/off function)
- With the **One-Shot modes** the A-155/A-154 combination can be used e.g. as a **complex envelope generator.** One analog row determines the levels of the envelope. The second analog row can be used to adjust the time length for each step
- The A-154 requires **at least one A-155**

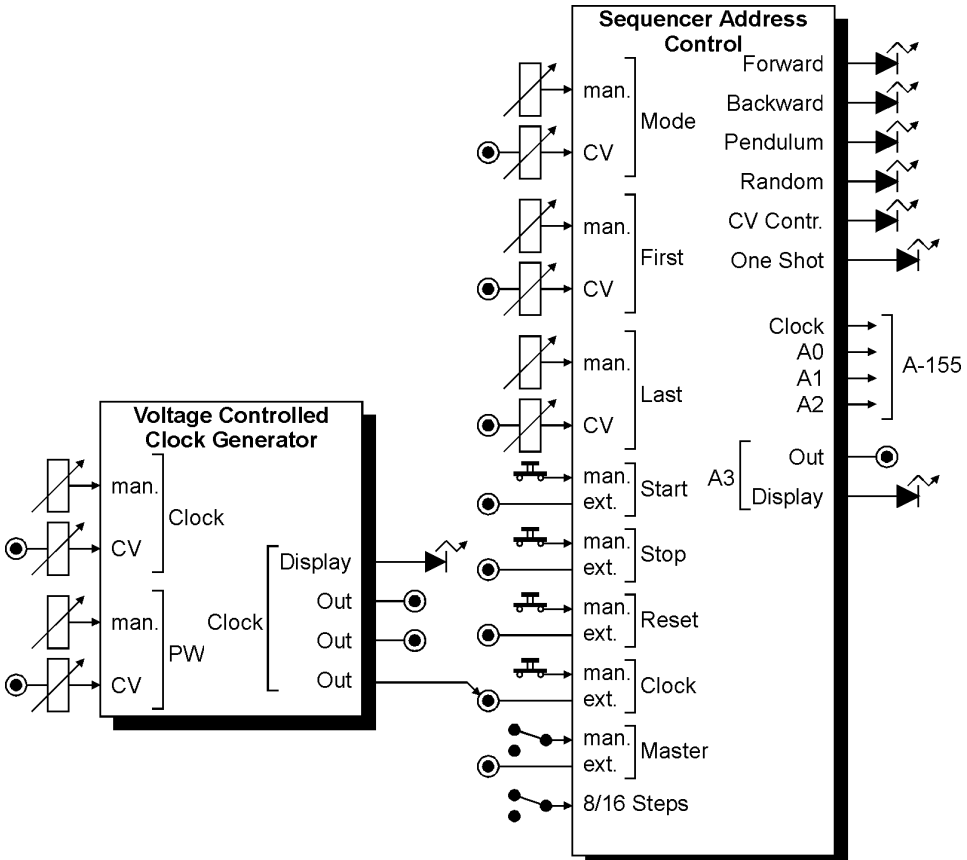

Fig.1: Overall view

2. Basic principles

The current step position of the A-155 is determined by the current *address* of the sequence. The address reaches from 1 to 8 as the A-155 has eight steps available. Internally the address is formed by three digital address signals A0, A1 and A2 having the valencies 1 (A0), 2 (A1) resp. 4 (A2). The connection between step position and the digital values for A0, A1 and A2 is as follows:

Step position	A0	A1	A2
1	low / 0	low / 0	low / 0
2	high / 1	low / 0	low / 0
3	low / 0	high / 1	low / 0
4	high / 1	high / 1	low / 0
5	low / 0	low / 0	high / 1
6	high / 1	low / 0	high / 1
7	low / 0	high / 1	high / 1
8	high / 1	high / 1	high / 1

The "old" control unit of the A-155 simply generates the address signals A0, A1 and A2 so that the steps 1-8 are selected one after another. If the A-154 is used to drive the A-155 the old control unit (i.e. the section with Start/Stop/Step/Reset buttons and input sockets) is no longer active and the A-154 calculates the address signals A0, A1 and A2 in a more sophisticated way. The type of address succession depends upon the selected mode (forward, backward, pendulum, random, CV addressed, loop/one shot).
In serial mode (i.e. if the A-154 is used to drive two serial running A-155) another address signal A3 with valency 8 is generated. This signal is used to distinguish between the first and second A-155 by means of voltage controlled switches.

In addition the A-154 even generates clock signal with both voltage controlled rate and pulsewidth.

If the A-154 is used to control the A-155 the previous connection between the "old" control unit and the analog resp. trigger/gate rows of the A-155 has to be disconnected and the rows have to be connected to the corresponding signals of the A-154. In the appendix this procedure is described in detail. The combination of A-154 and A-155 does not work before this procedure is carried out. It is not sufficient simply to assemble the A-154 into the A-100 frame !

3. Overview

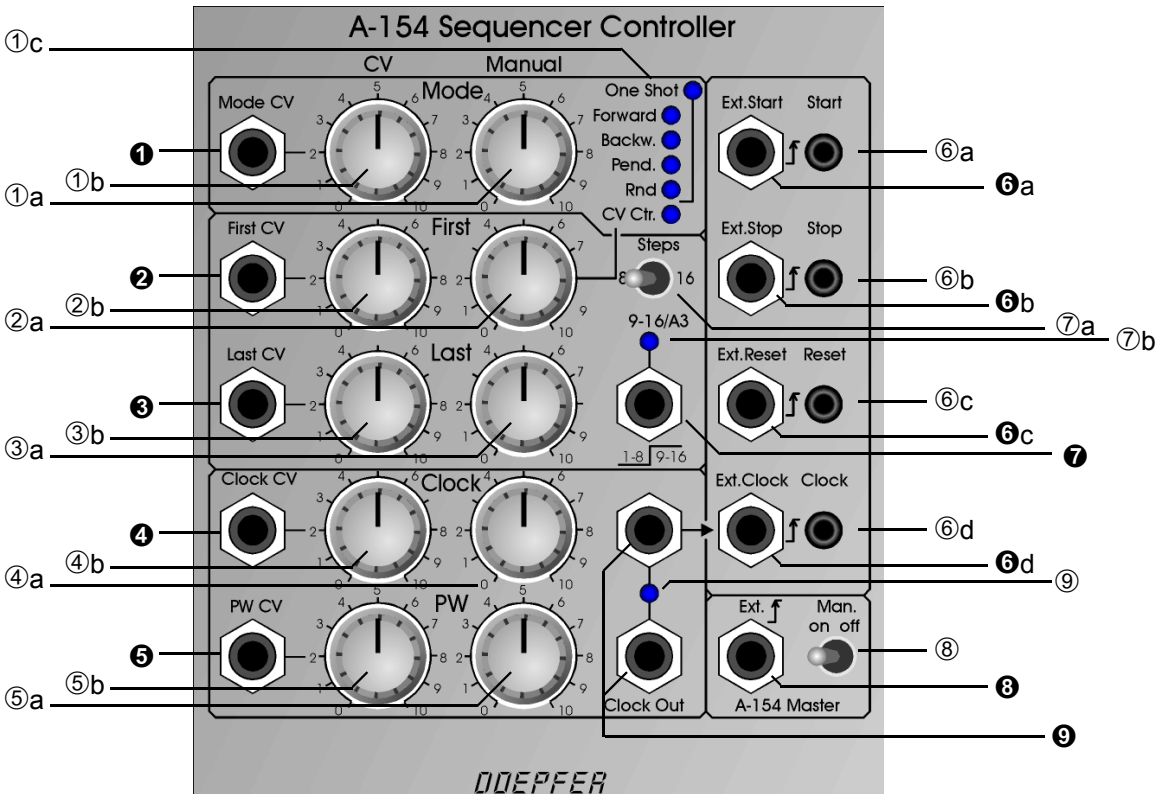
A-154 Sequencer Controller
CV
Manual
Mode CV
Mode
One Shot
Forward
Backw.
Pend.
Rnd
CV Ctr.
Ext.Start
Start
First CV
First
Steps
8
16
Ext.Stop
Stop
9-16/A3
Last CV
Last
Ext.Reset
Reset
1-8
9-16
Clock CV
Clock
Ext.Clock
Clock
PW CV
PW
Ext.
Man.
on off
Clock Out
A-154 Master
DOEPFER
①c
❶
①b
①a
⑥a
❻a
②b
②a
⑦a
⑦b
❷
⑥b
❻b
③b
③a
⑥c
❻c
❼
❸
④b
④a
⑥d
❻d
⑨
❹
⑤b
⑤a
⑧
❽
❺
❾

Controls:

①**a Manual Mode**: Manual Mode control
①**b Mode CV**: Attenuator for CV input ❶
①**c** Mode display (6 LEDs)
②**a Manual First**: Manual First control
②**b First CV**: Attenuator for CV input ❷
③**a Manual Last**: Manual Last control
③**b Last CV**: Attenuator for CV input ❸
④**a Manual Clock**: Manual Clock control
④**b Clock CV**: Attenuator for CV input ❹
⑤**a Manual PW**: Manual Pulsewidth control
⑤**b PW CV**: Attenuator for CV input ❺
⑥**a Manual Start**: Start button
⑥**b Manual Stop**: Stop button
⑥**c Manual Reset**: Reset button
⑥**d Manual Clock**: Clock button
⑦**a 8/16 Steps**: 8/16 steps switch
⑦**b 9-16/A3**: LED display of A3/output ❼
⑧ **Man On/Off**: A-154 master switch
⑨ **Clock**: Clock display

Inputs / Outputs:

❶ **Mode CV**: Mode control voltage input
❷ **First CV**: First control voltage input
❸ **Last CV**: Last control voltage input
❹ **Clock CV**: Clock control voltage input
❺ **PW CV**: Pulsewidth control voltage input
❻**a Ext. Start**: External Start input
❻**b Ext. Stop**: External Stop input
❻**c Ext. Reset**: External Reset input
❻**d Ext. Clock**: External Clock input
❼ **1-8/9-16**: A3 output (1-8 / 9-16)
❽ **ext. Master**: External master control input
❾ **Clock Out**: Clock output (2x)

4. Controls

①a Manual Mode (knob)/ ①c Anzeige (LEDs)
❶ Mode CV (socket) / ①b Mode CV (knob)

Control ①a is used to select the desired mode manually. This parameter can also be modulated with an external control voltage (CV) applied to socket ❶ (e.g. slow LFO, foot controller, Theremin). Control ①b is used to attenuate the external CV and consequently the influence of the external CV. The current mode is displayed by means of the 6 LEDs ①c.

These modes are available:

- **Forward**
- **Backward**
- **Pendulum**
- **Random**
- **CV Controlled** (step position is controlled by an external CV applied to the *First CV input* ❷)

In addition each mode - except the CV controlled mode - is available even as **One Shot**. This means that the **sequence stops** as soon as the **final step** is reached.

For the first 3 modes the number of steps to reach the final step is exactly defined. For the random mode the number of steps required to reach the final step cannot be predicted (that's why it is called *random*).

Which of the steps is the **final step** depends upon the selected mode and the settings of the **First** and **Last** step section (see below). Examples: first step = 2, last step = 7. In *Forward/One Shot* mode the sequence stops at step 7. In *Backward/One Shot* mode the sequence stops at step 2.

The *CV Controlled* mode is not available as *One Shot* as in this mode the current position is defined by a voltage. In this mode the position of the sequence is controlled by the settings of the **First** section (i.e. the position of the manual First control ②a, the external CV ❷ and the corresponding attenuator ②b)

With increasing mode CV (resp. turning the manual mode control ①a clockwise) the modes are selected in the order as listed above followed by the same modes as one shots.

The required control voltage at socket ❶ to reach all available modes is about 0...+5V (with attenuator ①b at it's maximum and Manual Mode ①a at it's minimum position) .

The current mode is displayed with 6 LEDs. 5 LEDs are used to display the main mode (forward, backward ...). The separate LED labelled *One Shot* lights up if additionally the one shot mode is activated. Example: Both the "Backward" and the "One Shot" LED light up. This means that the *Backward / One Shot* mode is selected.

②**a Manual First** (knob)
②**b First CV** (knob) / ❷ **First CV** (socket)
③**a Manual Last** (Regler)
③**b Last CV** (knob) / ❸ **Last CV** (socket)

This group of elements is responsible for the **First** and **Last step** of the sequence. For both parameters a manual control (knobs ②a and ③a) and an external control voltage input (CV inputs ❷ and ❸) are available. The CV inputs are equipped with attenuators (knobs ②b and ③b). The attenuators are used to adjust the level of the corresponding external CV and consequently the influence of the CV.

The required control voltage at the sockets ❷ resp. ❸ to reach all steps is about 0...+5V (with attenuators ②b resp. ③b at it's maximum and Manual First ②a resp. Manual Last ③a at it's minimum position).

In the *CV Controlled* mode the first/last step function does not work. Rather the controls and the CV input of the **First** section (❷, ②a and ②b) are used in this mode for the **voltage addressed step position** of the sequence. The controls and CV input of the Last section have no function in this mode.

Note : If the sequencer seems not to work (i.e. it remains at a fixed position) please check if the settings of first and last step are the reason for this behaviour. If the value of the last step is the same or smaller than the value of the first step the sequence seems to stop ! But actually always the same step is addressed due to the settings of first and last step! If you do not want to use the first/last step function the manual controls should be set to minimum (②a Manual First) resp. maximum (③a Manual Last) and no external CVs should be applied resp. the attenuators (②b and ③b) should be set to minimum.

④**a Manual Clock** (knob)
④**b Clock CV** (knob) / ❹ **Clock CV** (socket)
⑤**a Manual PW** (knob)
⑤**b PW CV** (knob) / ❺ **PW CV** (socket)

This group of elements is responsible for the internal **clock generator**. Both rate (clock) and gate length resp. pulsewidth (PW) can be controlled independently. For both parameters a manual control (knobs ④a and ⑤a) and an external control voltage input (CV inputs ❹ and ❺) are available. The CV inputs are equipped with attenuators (knobs ④b and ⑤b). The attenuators are used to adjust the level of the corresponding external CV and consequently the influence of the CV.

The independent control of rate and pulsewidth leads to a lot of interesting features. E.g. controlling PW by one of the A-155 CV outputs allows a different gate length for each step. But the tempo (resp. clock rate) is the same for the whole sequence.

Another example is to control the clock rate by one of the A-155 CV outputs. This leads to a different time length (or different tempo) for each step, i.e. the tempo is different for each step. If the A-155 Gate output is used to control the clock rate skipping is possible as beyond a certain control voltage the step time becomes extremely short (less than a millisecond) and the corresponding step is practically leaved out.

Beyond it the parameters of the clock generator can be controlled by other voltages too: e.g. LFO, Random CV, Theremin, ribbon or foot controller, distance or light controlled CV and many more.

The required control voltage at the sockets ❹ resp. ❺ to cover the complete rate resp. PW range is about 0...+5V (with attenuators ④b resp. ⑤b at it's maximum and Manual Clock ④a resp. Manual PW ⑤a at it's minimum position). Beyond about +4.8V at socket ❹ skipping occurs (see above).

⑨ **Clock** (LED) / ❾ **Clock Out** (2 x socket)

The two sockets ❾ are the output of the internal clock oscillator (miniature multiple). The internal clock signal is normalled to socket ❻d Ext.Clock, i.e. the internal clock is used as clock source provided that no plug is inserted into socket ❻d. LED ⑨ is the clock display. Pay attention that for high clock rates (~ above 20 Hz) the human eye will not be able to follow the LED display and the LED seems to be permanently on (with dimmed brightness).

⑥**a Manual Start** (button) / ❻**a Ext. Start** (socket)
⑥**b Manual Stop** (button) / ❻**b Ext. Stop** (socket)
⑥**c Manual Reset** (button) / ❻**c Ext. Reset** (socket)
⑥**d Manual Clock** (button) / ❻**d Ext. Clock** (socket)

These 4 buttons and sockets have nearly the functions as those of the "old" A-155 control unit (refer to A-155 manual for details):

- ⑥a Manual Start: starts the sequence
- ⑥b Manual Stop: stops at the current position
- ⑥c Manual Reset: resets to first step
- ⑥d Manual Clock: advance to next step

- ❻a Ext. Start: positive transition starts sequence
- ❻b Ext. Stop: positive transition stops sequence
- ❻c Ext. Reset: positive transition prepares jump to first step (see below)
- ❻d Ext. Clock: positive transition triggers advance to next step

Socket ❻d Ext.Clock is normalled to the internal clock generator.

If the sequencer does not run though a clock signal is applied probably the stop mode is selected. In this case the start button has to be operated to start the sequence.

Operating the stop button causes the sequencer to stop at its current position. But no reset to first step is carried out!

Operating the reset button prepares the sequencer to jump to the first step as soon as the next clock signal (!) appears. If no clock signal is applied the reset button seems not to work! We believe that it makes more sense to carry out the jump to the first step not until the next positive clock transition occurs. Otherwise the next clock would cause an advance to step 2 (in forward mode and first step =1). Especially for synchronous operation of several sequencers this type of reset control is more useful from our point of view.

Attention! In this detail the A-154 control differs from the "old" A-155 control and from other sequencers. For the A-155 the reset was independent from clock. Operating the reset button caused to jump to step 1 independent from the clock signal and the next clock caused an advance to step 2.

Operating the clock button triggers an advantage to the next step - provided that no clock signal is applied. As the internal clock generator is normalled to the ext. clock socket ❻d one has to insert a plug into the ext. clock socket ❻d to interrupt the internal clock connection. This can be used to take your time to adjust the control settings of each step.

If an internal or external clock signal is applied the clock button can be used to "gate" the clock manually, i.e. as long as the clock button is operated the clock signal is blocked and the sequencer does not advance to the next step until the button is released.

⑦**a 8/16 Steps** (switch)
⑦**b 9-16/A3** (LED) **/ ❼ 1-8/9-16** (socket)

This group of elements is relevant only if two A-155 are driven by the A-154. Switch ⑦**a** is used to switch between parallel (8 steps) and serial operation (16 steps) of the A-155. If only one A-155 is used the switch should be set to position "8" unless you want to create special effects (see below). Switch ⑦a is connected very closely with the function of the address output A3 ❼ 1-8/9-16.

The two A-155 driven by the A-154 always run in parallel as the address signals A0, A1 and A2 are valid for both A-155. To obtain sequences with more than 8 steps another address signal A3 with valency 8 is generated by the A-154. This signal is available at socket ❼ **1-8/9-16** and is displayed with the LED ⑦**b**. This signal is "low" for address range 1...8 and "high" for 9...16. As the A-155 only "know" the addresses 1...8 a voltage controlled switch A-150 is necessary to switch between the corresponding outputs of the first and second A-155. For this socket ❼ has to be connected to the control input of the A-150 and the outputs of the A-155 (e.g. the upper CV outputs of the two A-155) with the inputs of the A-150. The common output of the A-150 is the "new" CV output as by means of the A3-controlled switching function of the A-150 a sequencer with 16 steps is "emulated". The same procedure is valid for trigger and gate rows. The new version of the A-150 (i.e. full switching range up to +12V) has to be used for gate/trigger!

Fig. 2 shows how to patch the upper trigger rows and the upper CV rows of two A-155 with A-154 and A-150.

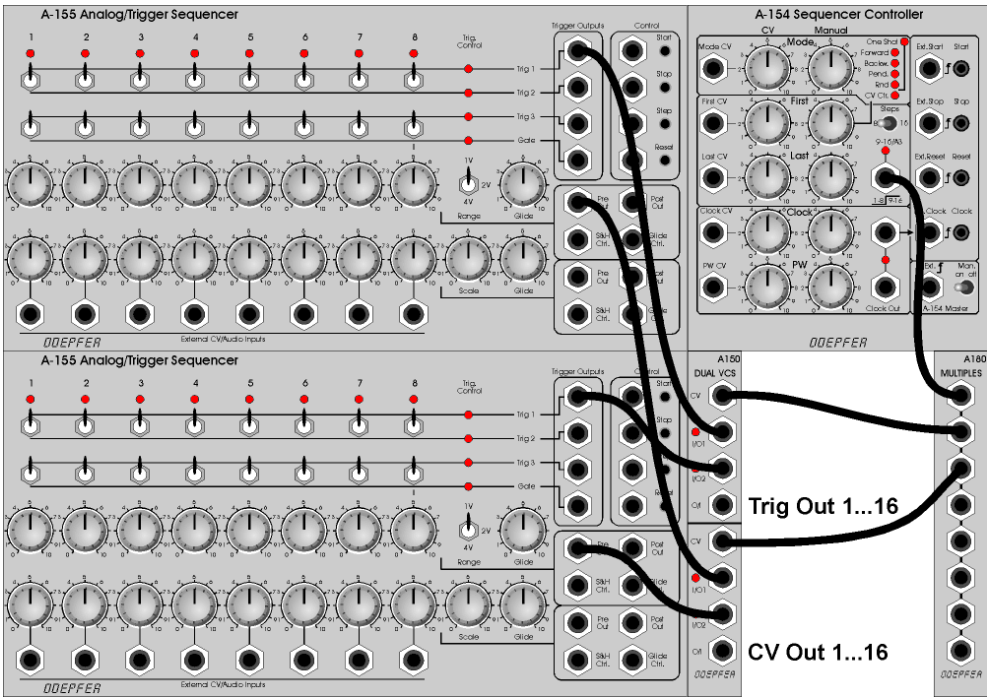

Fig. 2: Connection of A-154 with two A-155 and A-150

The position of switch ⑦a determines if the A-154 manages 8 or 16 steps. Only in position "16" the additional address signal A3 is generated that is required to control the VC switch A-150.

In position "8" all functions (e.g. first/last step, CV addressing) are calculated for sequences with up to 8 steps only and the output A3 is permanently "low".

In position "16" all functions are calculated for sequences with up to 16 steps and output A3 specifies if address 1...8 (A3 = low) or 9...16 (A3 = high) is currently active. The address range of first/last step and CV addressing is now 1...16.

For special effects switch ⑦a may be set to position "16" even with one A-155 only. This leads - without the VC switch A-150 - to some special qualities. If e.g. first step = 3 and last step = 14 the A-155 will run from step 3 to step 8 (address range 1...8; A3 = low, LED ⑦b off), then from step 1 to step 6 (adress range 9...16; A3 = high, LED ⑦b on) and will begin after that again with step 3. Similar happens in case of voltage addressed mode as the ranges 1...8 and 9...16 are repeated with one A-155 only as the switching between the two A-155 with the VC switch A-150 is missing.

It is possible to generate sequences with up to 16 steps too if two trigger rows resp. 2 CV rows of the A-155 are switched with an A-150 (for details see user examples).

⑧ **Man On/Off** (switch) **/ ❽ ext. Master** (socket)

This group of elements defines if the A-155 is controlled by it's "old" control unit or the A-154. The reason for this is the maximum clock frequency of the A-154 (~ 1kHz) which is more than enough for normal sequences. But for special applications of the A-155 (e.g. graphic VCO) it might be necessary to operate the A-155 with frequencies beyond 1kHz. In this case the "old" control unit of the A-155 has to be re-activated as this unit is able to work with higher frequencies.

Switching can be carried out manually with the switch ⑧ or by the external control input ❽. Manual and external control are or-wired, i.e. as soon as the switch is in the "On" position or a high level (> +3.5V) is applied to socket ❽ control by the A-154 is active. Otherwise the "old" control unit of the A-155 is used to run the A-155.

In case that the A-155 does not respond to changes of the A-154 settings probably the "old" control unit of the A-155 is active. In this case the switch ⑧ has to be turned to the "On" position.

5. User Examples

not yet ready

Appendix: Connection A-154 – A-155

(1) Disconnect the 10 pin ribbon cable leading from the connector ST1 of the small A-155 controller board to the bus board. This cable is no longer required. But you may keep it as a bus cable replacement (for other modules with 10 pin connectors).

(2) Disconnect the 10 pin ribbon cable leading from the connector ST2 of the small A-155 controller board to the other boards of the A-155 (potentiometer and trigger boards). This cable is connected to another ribbon cable coming from the A-154 (see below).

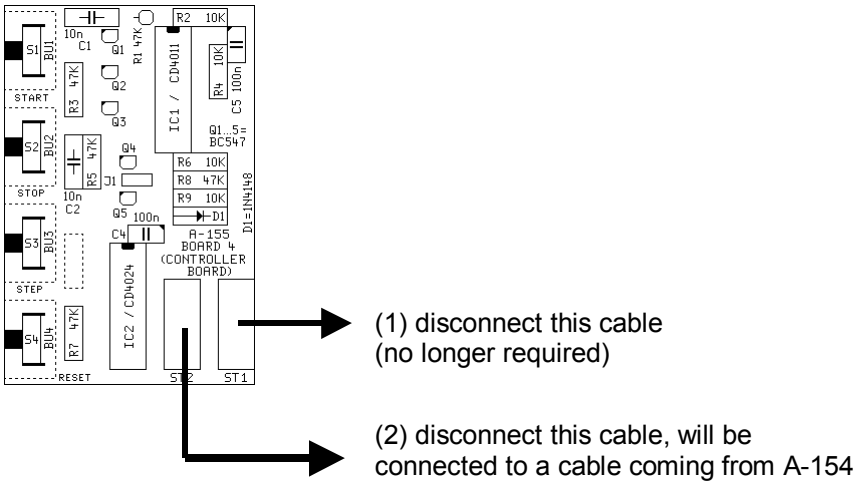

Two 10 pin ribbon cables come from the A-154. One (A) with a 10 pin female connector (A1) at its end and another (B) with two female connectors equipped with pin headers (B1, B2). One of the pin headers (B2) is provided with a second "blind" female connector as short-circuit protection (in case that only one A-155 is controlled by the A-154):

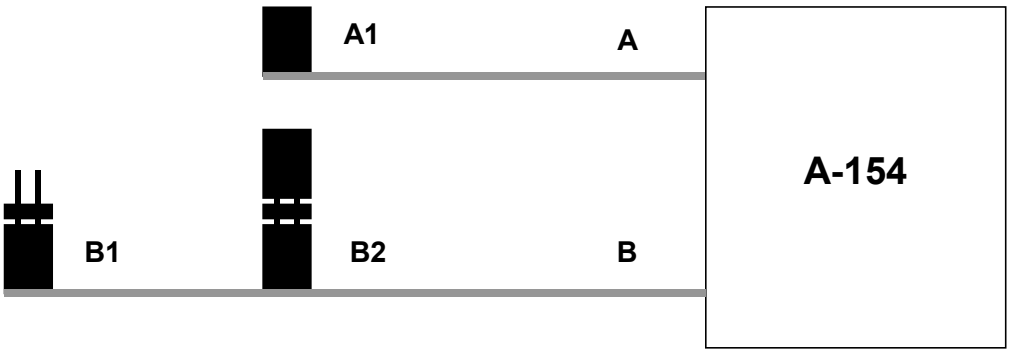

(3) Connect the 10 pin female connector **A1** of cable **A** to the pin header **ST2** of the small A-155 controller board (that has become free). Pay attention to use ST2 but not ST1 ! ST1 remains unconnected ! Otherwise a short circuit is made after power on and the A-154 may be destroyed ! Pay also attention to the polarity of the ribbon cable: the red wire has to show to the bottom if the A-155 module is assembled into the frame.

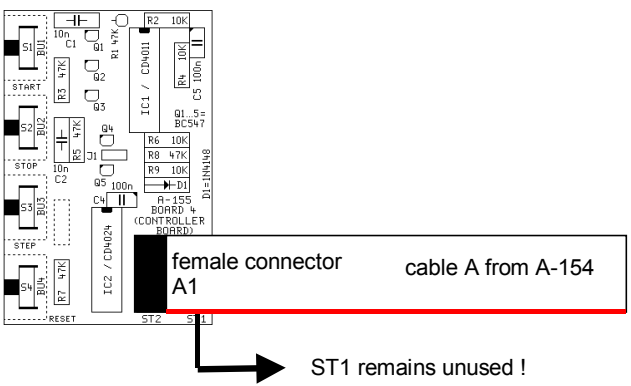

(4) Connect B1 with the female connector at the end of the ribbon cable that was removed from ST2 of the small A-155 controller board (this cable leads to the potentiometer and trigger boards of the A-155). The male pin header inserted into female connector B1 is used to establish this connection. Pay attention the the position of the red wire is the same for both ribbon cables ! The complete connection looks like this:

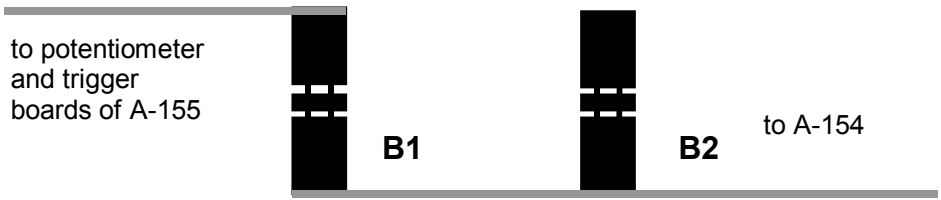

In case that **two A-155** have to be controlled by the A-154 the second A-155 has to be connected in this way:

Carry out steps (1) and (2) as described above even for the second A-155. Step (3) is not applicable. Step (4) is carried out as described above but B2 is used instead of B1. For this the "blind" female connector has to be removed before the cable coming from the potentiometer and trigger boards of the second A-155 is connected to B2. In this case the complete connection looks like this:

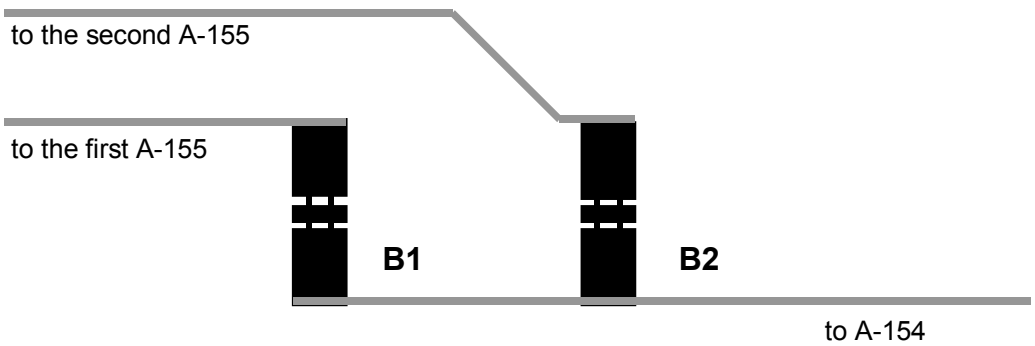

Attention! The second A-155 cannot be controlled by its "old" internal controller board. Both A-155 are controlled by the A-154 or the "old" controller board of the first A-155 depending upon the position of the master switch of the A-154.

Attention! If the controller and/or trigger board of the A-155 has been modified (recognizable by additional electronic parts soldered at the bottom side of the board) the modification has to be cancelled. Otherwise the A-155 will not work flawless in combination with the A-154. For details how to undo the modification please contact technik@doepfer.de.

1. Introduction

Module **A-155** (Analog / Trigger Sequencer) is a combined **8-step analog and trigger sequencer**: it can simultaneously produce sequences of analog voltages and trigger and/or gate signals.

Module A-155 works very much like the Clock Sequencer module, A-161, but includes many extra (and expensive to implement!) functions.

The **control section** includes switches for **Start**, **Stop**, **Step** and **Reset** - which can be operated by **push-button** as well as **digital signals**. Above the top row, **eight LEDs** show the progress of the sequence, with each step's LED lighting in turn.

The A-155 has two **analog rows,** each with **eight knobs**, with which to set the control voltage for each step. The upper row is particularly designed for pitch control of a VCO, with a **range switch** giving the ability to set pitches precisely.

The lower row of eight knobs has the ability to accept an **external signal for each step**, in which case the knobs act as attenuators for this voltage.

The variable voltages from the analog rows can either be output direct, or can go through a **sample-and-hold** section and a **slew limiter ('glide').** Using the **S&H** and **glide control inputs,** it's possible to select 'hold' (S&H) or portamento (glide) for whichever step or steps you want.

Three rows of **triggers** and **one row** of **gates** are available. For each step, a three-way mini-switch lets you decide whether one or the other (or neither) of the two triggers works. Each row has an **LED** which lights whenever a trigger or gate is active at any particular step.

2. Overview

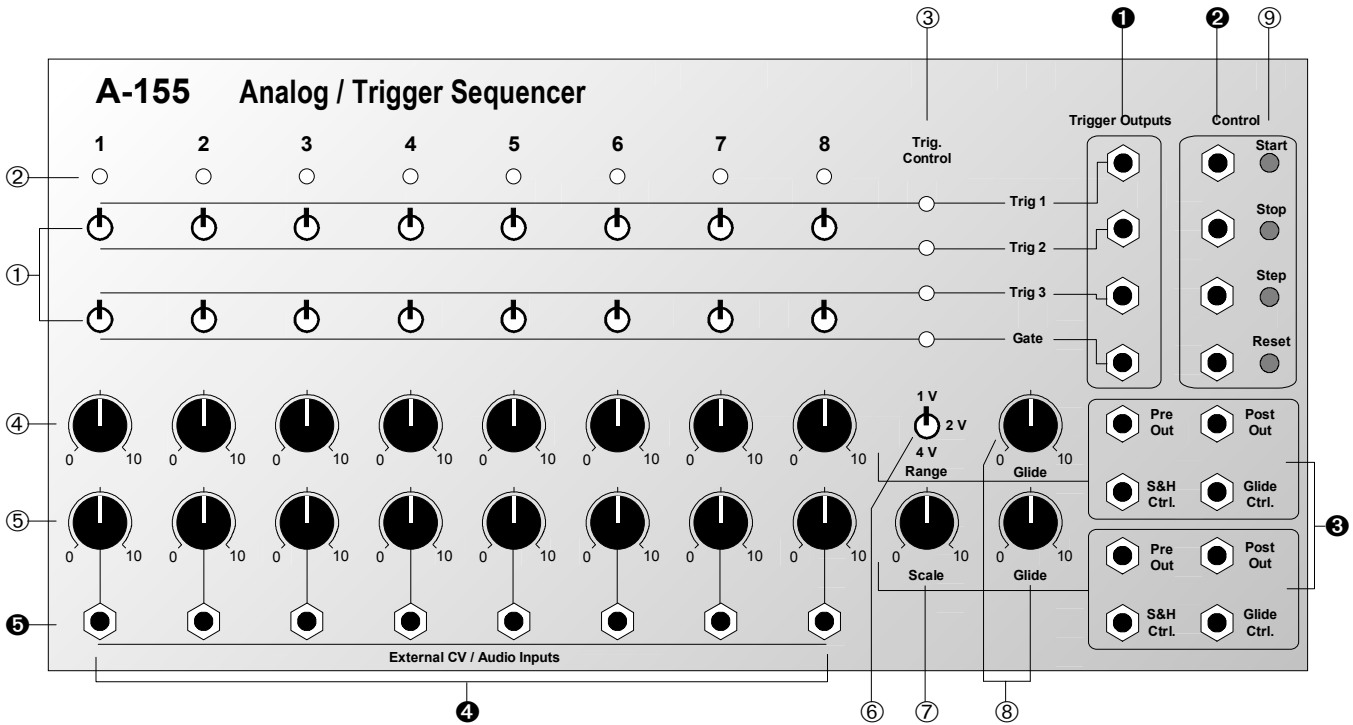
A-155 Analog / Trigger Sequencer
1 2 3 4 5 6 7 8
Trig. Control
Trigger Outputs
Control
Start
Stop
Step
Reset
Trig 1
Trig 2
Trig 3
Gate
1 V
2 V
4 V
Range
Glide
Scale
Pre Out
Post Out
S&H Ctrl.
Glide Ctrl.
External CV / Audio Inputs
0 10
① ② ③ ④ ⑤ ❺ ❶ ❷ ⑨ ❸ ⑥ ⑦ ⑧ ❹

Controls

① **Switches** : these select triggers and/or gates for each step

② **LEDs** : indicators to show the step reached

③ **Trig. Control**: indicators for trigger and gate rows

④ **CV knob**: these set the control voltage output for each step of the upper CV row

⑤ **CV knob**: these set the control voltage output for each step of the lower CV row, and/or act as attenuators for the external CV / audio inputs

⑥ **Range** : switch to select the voltage range of the CVs put out by the upper CV row

⑦ **Scale** : range control for the lower CV row

⑧ **Glide** : control for the glide time (amount of slew) on either upper or lower CV row

⑨ **Control** : manual controls

Start : start button
Stop : stop button
Step : button for manually stepping through a sequence
Reset : reset button

In / Outputs

❶ **Trigger Out** : outputs for the three triggers and one gate

❷ **Control** : digital control input sockets

Start : input for start signal
Stop : input for stop signal
Step : input for clock signal
Reset : input for reset signal

❸ **CV outputs**, **control inputs** :

Pre Out : output for the upper or lower analogue CV row

Post Out : as above, but after the sample-and-hold and/or glide circuitry

S&H Ctrl. : control input for sample-and-hold section

Glide Ctrl. : control input for the glide section

❹ **External CV/ Audio Inputs** : inputs for controlling the voltage of each step of the lower analog CV row by a CV or audio signal

3. Controls

① Switches

The three-position toggle switches ① are used to select whether a particular step outputs a trigger signal on its respective row.

Position of the **upper switches**:

- **up**: **trigger output on row 1** (**Trig 1** output)
- **centre**: no trigger output
- **down**: **trigger output on row 2** (**Trig 2** output)

Position of the **lower switches**:

- **up**: **trigger output on row 3** (**Trig 3** output)
- **centre**: no trigger output
- **down**: **gate output on row 4 (Gate** output)

The three upper rows produce triggers - each step that is switched to a row will produce a short pulse like a clock signal. The lowest row produces gates - the signal remains "high" for the duration of the step (see fig. 1 on the next page).

② LEDs

The eight LEDs ② show the sequence's progress; each LED lights when its respective step is active.

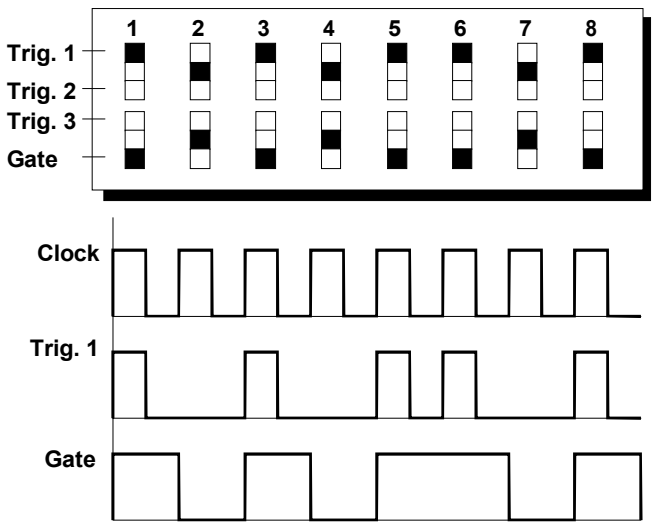

fig. 1: timing diagram for trigger and gate rows

③ Trig. Control

The four LEDs ③ are status indicators for the trigger and gate rows. Each lights when a step is reached which is switched to its own row.

④ CV knobs (upper row)

You use the CV knobs ④ (upper row) to set the **voltage output for each step** in the upper analog CV row. The control voltage set for each step is output at the upper **Pre Out ❸** socket.

The **range of voltage output** can be controlled with the range switch ⑥. Three very accurate voltage ranges are provided (see below) so that the upper analog CV row is ideally suited for precise **VCO pitch control.**

⑤ CV knobs (lower row)

You use the CV knobs ⑤ (lower row) to set the **voltage output for each step** in the lower analog CV row. The control voltage set for each step is output at the lower **Pre Out ❸** socket.
You use the **Scale control** ⑦ to adjust the **range** of the voltages controlled by the CV knobs.

☞ If for any step you patch in an **external CV / audio input** (socket ❹), the corresponding-knob in the lower row doesn't put out its own voltage.

Instead, it acts as an **attenuator** for the external CV / audio signal, before sending it to the lower **Pre Out** output ❸.

⑥ Range

The position of the **Range switch** (a three-way toggle switch) ⑥ selects the precise **voltage control range**, within which the upper row of CV knobs ④ will operate. There are three ranges to choose from:

- **up** : 1 V (i.e. one octave)
- **centre** : 2 V (i.e. two octaves)
- **down** : 4 V (i.e. four octaves).

The maximum voltage is obtained by turning the knobs fully clockwise.

⑦ Scale

Control ⑦ sets the **range of control voltages**, within which the lower row of CV knobs ⑤ will operate. If an external CV / audio signal is patched into any of the sockets ❹, the scale control affects the amount of **attenuation** the CV knob will produce on that voltage**.**

⑧ Glide

The internal **slew limiter's** rate is set with control ⑧.
If for the current step in a sequence (e.g. step three) the slew limiter is switched in (by a **"low"** control signal at the **Glide Ctrl. ❸** socket), the control voltage sent to output **Post Out ❸** doesn't jump instantly from the voltage at the previous step (in this example, step two). Instead, it glides gradually to the new voltage, at

a speed determined by the Glide control knob (fig. 2).

If you patch the output from the Gate row into the **Glide Ctrl.** input ❸, you can **switch the glide function on** or **off** for **each step**, like on the Roland TB-303 (see fig. 2). If you patch the gate output through an A-165 trigger modifier, every gate activates 'glide'.

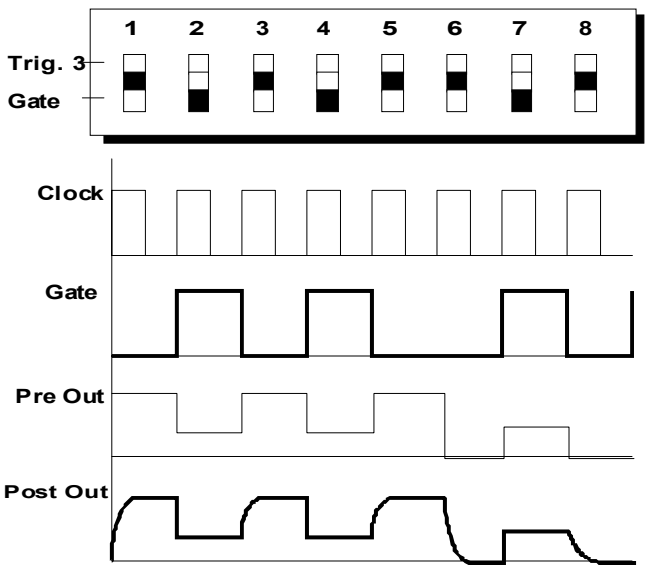

fig. 2: glide function

⑨ Control

The **control section** ⑨ includes four push-buttons for manual sequencer control. Alternatively, digital control signals can be sent to four corresponding sockets.

- **Start** : Used to start the sequence - i.e. to set it running.
- **Stop** : Used to stop the sequence.
- **Step** : Used to step through the sequence one step at a time. Each button-press corresponds to a clock pulse.
- **Reset** : Used to 'reset' the sequence - i.e. to send it back to begin again at step one.

4. In / Outputs

❶ Trigger Outputs

Sockets ❶ are the outputs from the **three trigger rows** and the **gate row**.

❷ Control

Alongside the four buttons for sequencer control, there are four corresponding digital control input sockets ❷.

- **Start** : A signal here starts the sequence.
- **Stop** : A signal here stops the sequence.
- **Clock** : A **clock signal** here steps through the sequence. Also called 'step' input.
- **Reset** : A signal here sends the sequence back to step one.

☞ **Start** and **Stop inputs** work in **trigger** mode. As soon as they sense the rising edge of a pulse, they produce a momentary signal. The length of the pulse makes no difference - a pulse of long duration still just produces a momentary trigger.

Clock (step) and **Reset inputs**, on the other hand, work by sensing level: so, for instance, Reset will always be active (keeping the sequence at step one) as long as the reset signal is "high".

❸ CV outputs, control inputs

The two groups of sockets ❸ contain the **analog CV outputs** for each row, and the **digital control inputs** for the sample-and-hold and slew limiter sections**.**

The upper group of sockets relates to **analog CV row 1**, and the lower to **analog CV row 2**.

- **Pre Out** : The **control voltages** set on the respective analog CV row are output here, **before** (*pre*) passing through the slew limiter and sample-and-hold sections.
- **Post Out** : The **control voltages** set on the respective analog CV row are output here, **after** (*post*) passing through the slew limiter and sample-and-hold sections.

- **Glide Ctrl.** : The glide function is active whenever the control signal input here is “low”.

  ☞: If nothing’s connected to the socket, glide function is active!

- **S&H Ctrl.** : This is the socket for the digital **Sample & Hold control input.** Whenever a "high" control signal is sensed, the analog CV output is held at the same level until the control signal goes low. Usually one of the trigger rows would be patched in to this socket.

The purpose of this ‘hold’ function becomes clear if you e.g. want to hold the pitch of a VCO over 2 or more steps. In this case the S&H function takes care that the CV is held over the regarding steps provided that the S&H control input is connected to one of the trigger outputs and the trigger switches are set suitable. Without the use of the S&H you would have to adjust the potentiometers of the regarding steps very careful to obtain exactly the same voltage for the successive steps.

❹ External CV / Audio Inputs

The inputs ❹ for the **lower analog CV row** can be used to patch in any **control voltage or audio signal.**

For any step used in this way, the CV knob ⑤ then acts as an attenuator for the signal input.

5. User examples

Module A-155 has limitless potential. All sorts of very complex sequences, modulation and audio manipulation are possible. In the following examples of typical patches, there’s only room to mention a few of the most common uses.

Fig. 3 shows a **standard patch** - a six-step sequence with pitch, filter and glide control, to give an example of some of the typical control possibilities the A-155 provides.

The **upper analog CV row** is controlling the **pitch** of the VCO. In this example, output "Post Out 1" has been chosen, because the glide function is being used.

Trigger row 1 (steps 1, 2, 3 and 5 selected) picks out the **accented notes**, by triggering an ADSR, which controls the VCA.
Trigger row 2 determines the **length of the sequence,** by triggering the **reset** function**.** In this example, step seven is switched to this row, which is patched to the reset input, making the sequence six notes long.
The **gate row** is used for controlling the **glide function**. In this example, step two is switched to this row, so that portamento (at a rate set by the Glide control) occurs between the voltages at step one and step two.
The **lower analog CV row** is controlling the **VCF cut-off frequency**.

Trigger row 3 is available for any other control job you choose. Variations on the patch in fig. 3 might include controlling the VCF with either the same or a different ADSR, or using the lower analog CV row to control the decay time of a VC-ADSR (see also fig. 4).
Interesting effects can be obtained by patching **external control voltages** (e.g. from an LFO or Random CV) or **audio signals** (e.g. VCO or Noise) into the lower analog CV row. The latter can sound particularly interesting, because of the effects of short bursts of audio-range frequency modulation.

Interesting effects can be obtained by patching **external control voltages** (e.g. from an LFO or Random CV) or **audio signals** (e.g. VCO or Noise) into the lower analog CV row. The latter can sound particularly interesting, because of the effects of short bursts of audio-range frequency modulation.

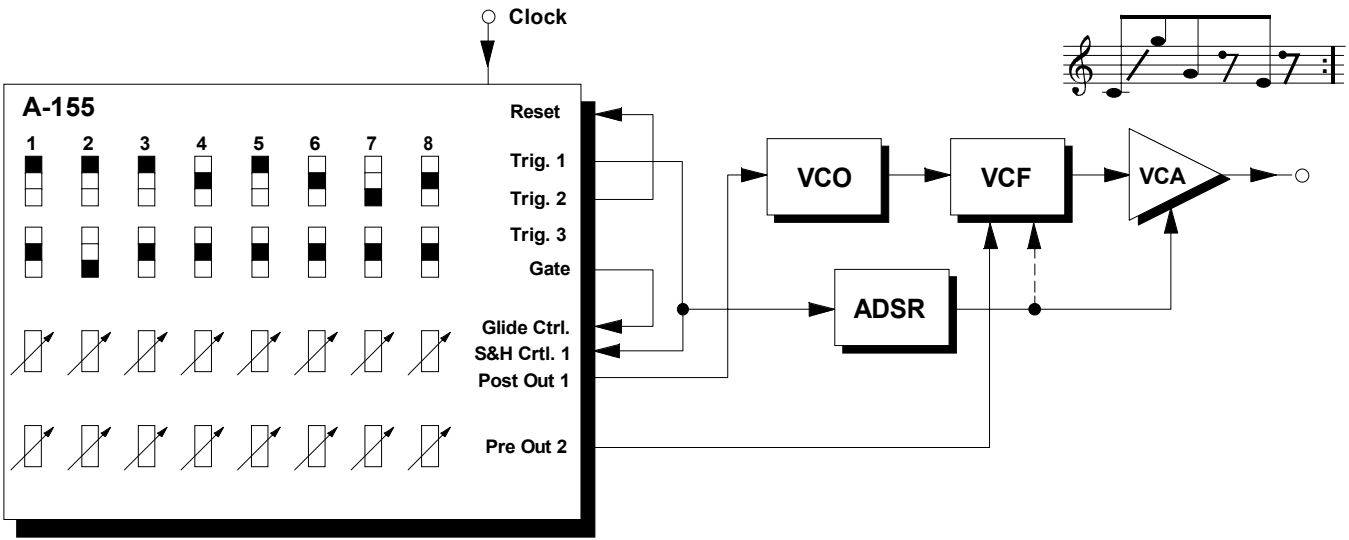

fig. 3: standard patch with VCO, VCF and glide control

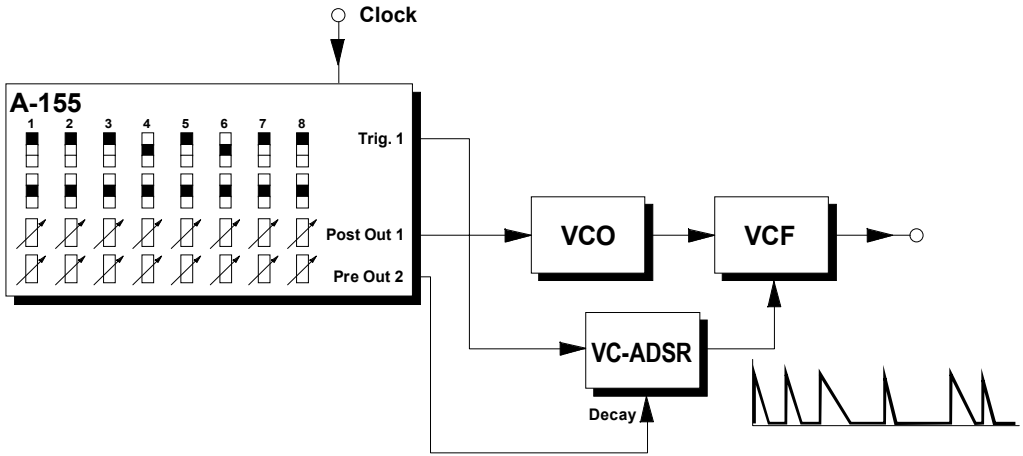

fig. 4: controlling decay time in a VC-ADSR

In fig. 4 the lower analog CV row controls the **decay time of a VC-ADSR**. This in turn controls the cut-off frequency of a VCF, and so produces filter accents of different lengths.

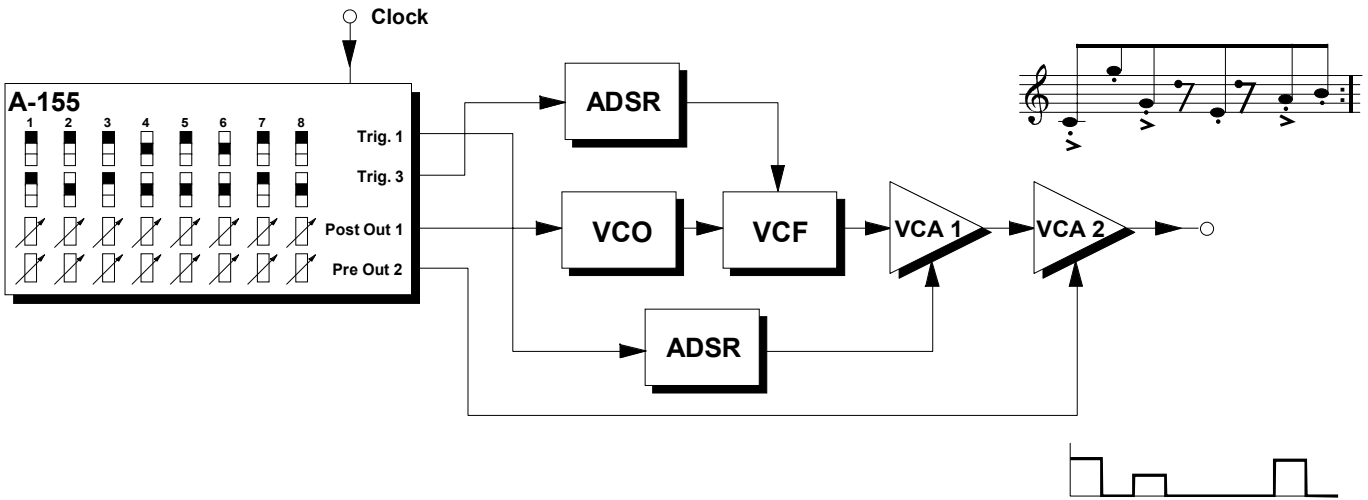

fig. 5: controlling accents / dynamics

With the patch in fig. 5 you can create **variable dynamics or accents** within the sequence. The gain control of **VCA 2** needs to be set to **greater than zero** (a setting of 5 is a good starting point).

The patch in fig. 6 shows how to use the A-155 as a **16-step sequencer** with one single analog CV row. What's needed are the Clock Divider A-160 (output **/8**) and the two voltage-controlled switches in the A-150 VCS module.

With every eight clock pulses, the A-150 switches between the two trigger and analog CV rows, so that there's now a 16-step trigger and CV sequence available at the outputs of the A-150.

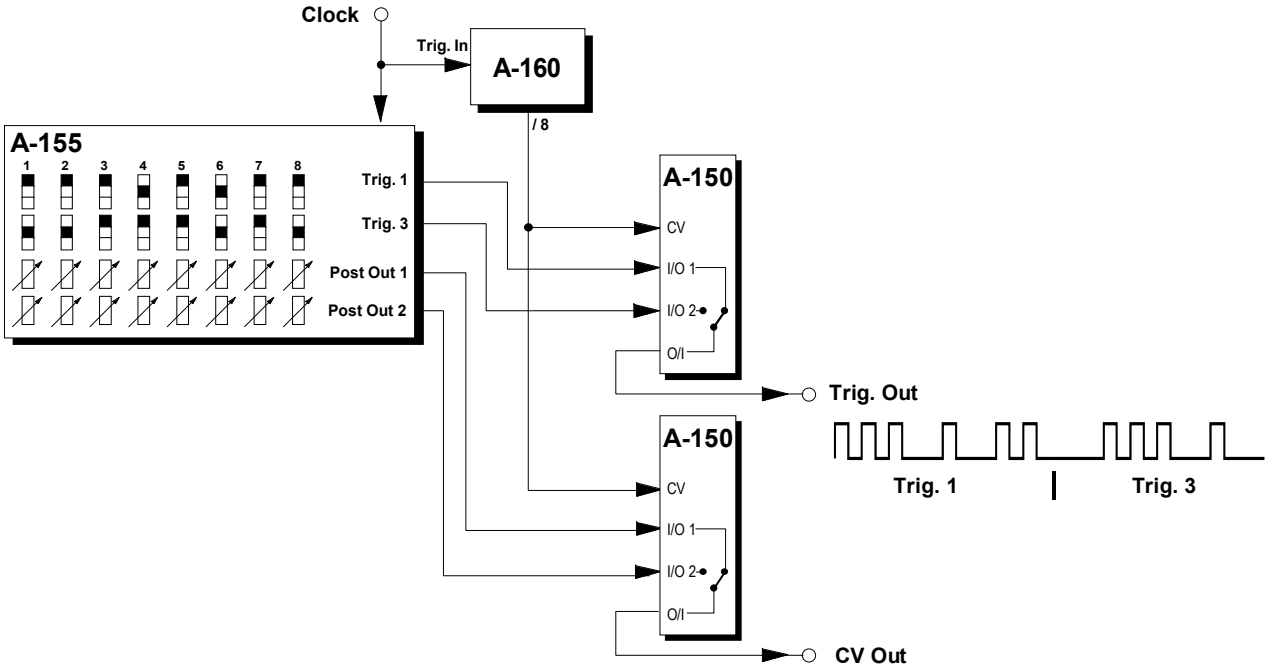

fig. 6: 16-step sequence with single analog CVs

The following are some short notes with suggestions for further exploration, to act as inspiration for your own patching ideas.

- **Gate patched to glide control**
  Glide / portamento can be switched on or off for each step (a la TB-303, see. p. 6).

- **Trigger (Gate) patched to Reset**
  Shortening a sequence to, e.g., six notes.

- **Trigger (Gate) patched to Stop**
  "One shot": the sequence runs just once, and only repeats when a Start signal is received.

- **Chopping up audio signals**
  Using the lower analog CV row, audio signals patched into the inputs will be output 'chopped up' from the Pre Out socket.

- **MIDI control**
  The A-155 can be controlled by MIDI-Clock with the help of an A-190 module; the Clock and Reset outputs of the A-190 are simply connected to the Clock and Reset inputs on the A-155.

- **Random Clock**
  The Random Clock output from the A-117 can give a sequence random timing.

- **VC-LFO as Clock**
  Using one of the analog CV rows to control a VC-LFO (A-147), the timing of each step of the sequence can be completely variable.

- **Variable decay time for each step**
  Using one analog CV row to control the decay time on a VC-ADSR (A-141 or A-142 - and on the A-141 attack and release times could also be controlled) the envelope output can then control, e.g., a VCF or VCA.

- **Variable audio pulse width for each step**
  Using one analog CV row to control the pulse width of a VCO square wave.

Variable control pulse width for each step
Using one analog CV row to control decay on an A-142 (and taking the gate output from the A-142).

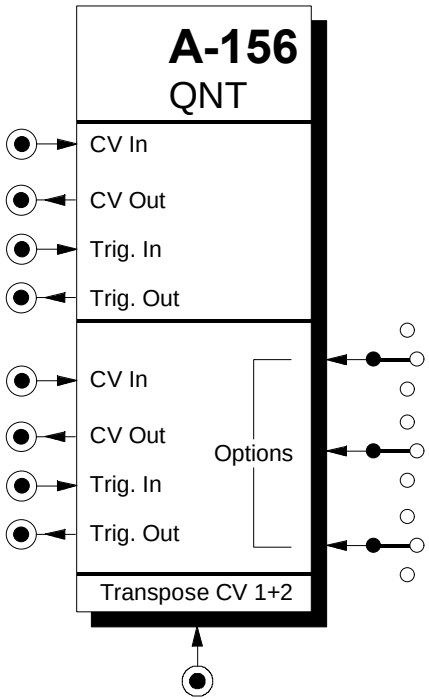

1. Introduction

Module **A-156** (**QNT**) is a **dual control voltage quantizer**.

For each of the two sections, the control voltage applied to the input is converted into the nearest quantized (i.e. terraced or stepped) voltage, and sent to the control voltage output. Any voltage between 0 and 10V is acceptable.

Quantizer 1 provides the **usual semitone grid** (i.e. steps of 1/12 V) whereas **quantizer 2** enables more elaborate **grid settings** like major or minor scales or chords. If desired quantizer 1 can use the same grid settings as quantizer 2.

The **trigger inputs** allow the synchronization of the quantizing processes to other events (e.g. envelope trigger, analog sequencer clock, MIDI clock).

The **trigger outputs** transmit a trigger pulse whenever quantization takes place.

The **transpose input** is common for both quantizers and enables the transposition of both output voltages.

2. Overview

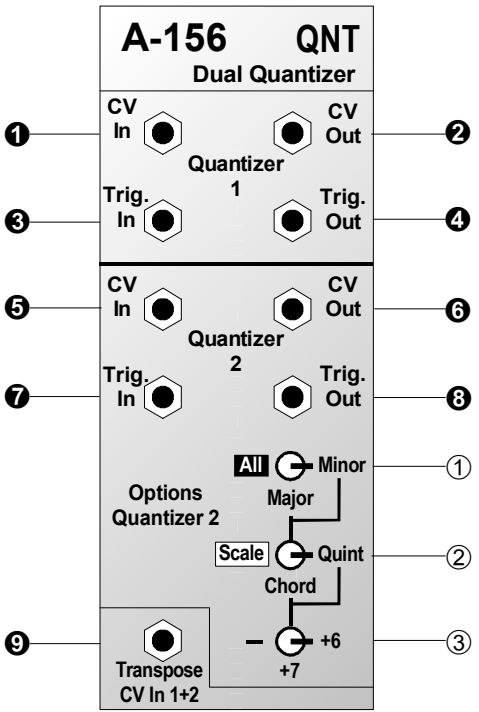

Controls:

① **switch** : 3-position switch for scale type (chromatic, major, minor)

② **switch** : 3-position switch for mode (scale, chord, fundamental + fifth)

③ **switch** : 3-position switch for additional sixth or seventh

In / Outputs:

❶, ❺ **CV In** : Control voltage inputs

❷, ❻ **CV Out** : Control voltage outputs (quantized)

❸, ❼ **Trig. In** : Trigger inputs

❹, ❽ **Trig. Out** : Trigger outputs

❾ **Transpose** : Transpose control voltage input for simultaneous transposition of quantizer 1 and 2

3. Basic Principles

A quantizer consists of an analog/digital converter (ADC) and a digital/analog converter (DAC). The voltage applied to the analog input of the ADC is converted into digital information (e.g. 6 bit = 64 steps). The DAC converts this digital information back into a quantized analog voltage in the same voltage range. For pitch control voltage applications following the 1V/oct standard an ADC resolution of 1/12V (= 0.0833V) is used.

Module A-156 contains 2 quantizers. The factory setting for **quantizer 1** is a semitone grid (i.e. voltage steps of 1/12 V, see fig. 1).

☞ If the position of **jumper J1** on the A-156 circuit board is changed the first quantizer has the same features as quantizer 2, i.e. the 3 switches determine the behaviour of quantizer 1 as well.

Quantizer 2 enables other grids than just semitones, e.g. major scale, minor scale, major chord, minor chord, fundamental + fifth and the addition of a sixth or seventh to chords. This means that only such voltages appear at the control voltage output that meet the selection criteria (e.g. minor chord with seventh) set by the 3 switches.

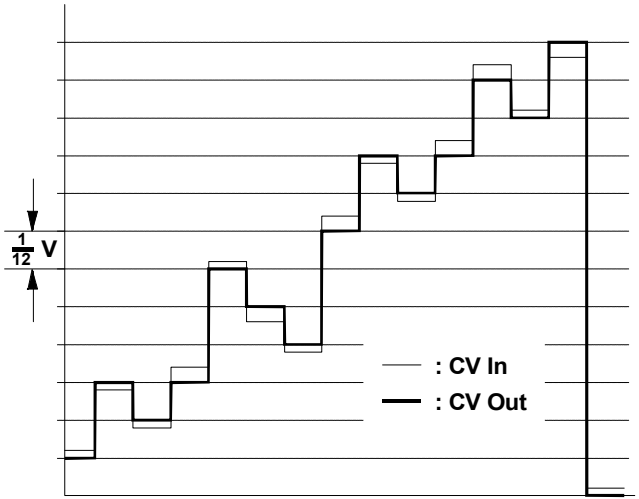

fig. 1: Quantizing in a semitone grid (1/12 V)

Quantization takes place continuously if the trigger input of the quantizer in question is not used (i.e. if nothing is plugged into the trigger input socket). The internal quantizing rate is about 500 Hz in this case. If a rectangle signal is applied to the trigger input (e.g. from an LFO, sequencer trigger output, MIDI-to-Sync interface) the quantization happens only during the low/high transition of the trigger input signal. Thus the quantization process can be synchronized to other events.

4. Controls

① Switch

The **3-position switch** ① determines the **scale type.**

In position "**All**" a **chromatic scale** (see fig. 2) is used, i.e. the voltage step is 1/12 V.

☞ In this case switches ② and ③ have no function.

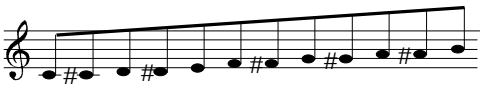

fig. 2: chromatic scale (semitone grid)

In the "**Major**" position **major chords** or **major scales** are generated depending upon the position of switch ②.

In the "**Minor**" position **minor chords** or **minor scales** are generated depending upon the position of switch ②.

② Switch

The **3-position switch** ② determines the **output mode**.

In the "**Scale**" position all voltages corresponding to the scale selected with switch ① (major or minor) are passed to the control voltage output (see fig. 3).

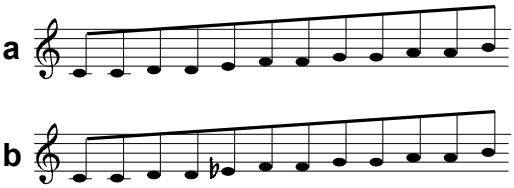

fig. 3: Major scale (a) and minor scale (b)

☞ During scanning of the control voltage all 12 steps of an octave are generated. Therefore some steps appear twice in the graph above. The same is valid for all other grids too.

In the "**Chord**" position only voltages corresponding to the chord type selected with switch ① (major or minor) are passed to the control voltage output (see fig. 4 a+b).

In the "**Quint**" position only voltages corresponding to the fundamental or the fifth are passed to the control voltage output (see fig. 4 c).

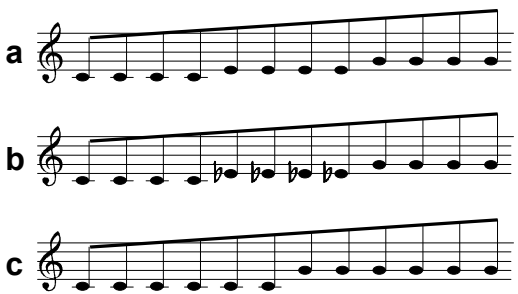

fig. 4: Major chord (a), minor chord (b) and fundamental+fifth (c)

☞ If switch ① is in the "All" position, switch ② has no function.

③ Switch

The **3-position switch** ③ enables the addition of a **sixth** (pos. +6) or a (minor) **seventh** (pos. +7) if switch ② is in position "**Chord**" (see fig 5 a, b, c, d) or "**Quint**" (see fig. 5 e, f). In the middle position "-" neither is added.

☞ If switch ① is in the "All" position the switches ② and ③ have no function. Likewise switch ③ has no function if ② is in the "Scale" position.

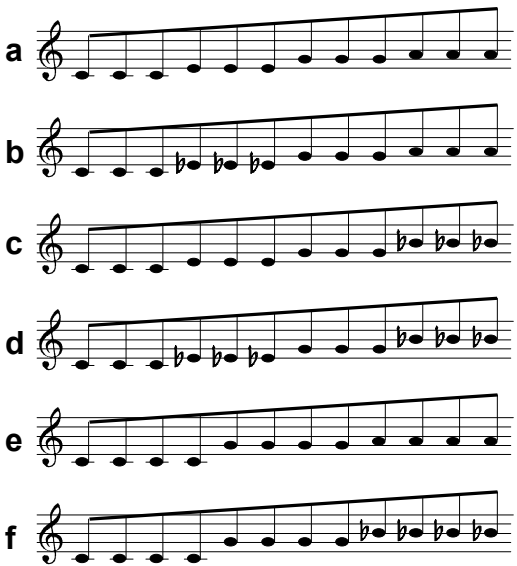

fig. 5: Addition of a sixth (a, b, e), and seventh (c,d,f)

5. In / Outputs

❶ CV In • ❺ CV In

Socket ❶ and ❺ are the **inputs** for the quantizers 1 and 2 respectively. The control voltage to be quantized is patched into these sockets.

❷ CV Out • ❻ CV Out

At **outputs** ❷ and ❻ the quantized voltages appear.

❸ Trig. In • ❼ Trig. In

If a trigger signal is applied to the **trigger input** ❸ or ❼ the quantization process takes place during **low/high transition** of the trigger signal. If this is not desired leave the socket un-connected. Quantization then takes place at the internal rate of about 500Hz.

The external trigger signals are scanned with a rate of about 1kHz. Therefore the external trigger frequency has to be less than 500Hz to avoid aliasing effects. In practice this will be no restriction as normal quantization rates are much lower (usually only a few Hz).

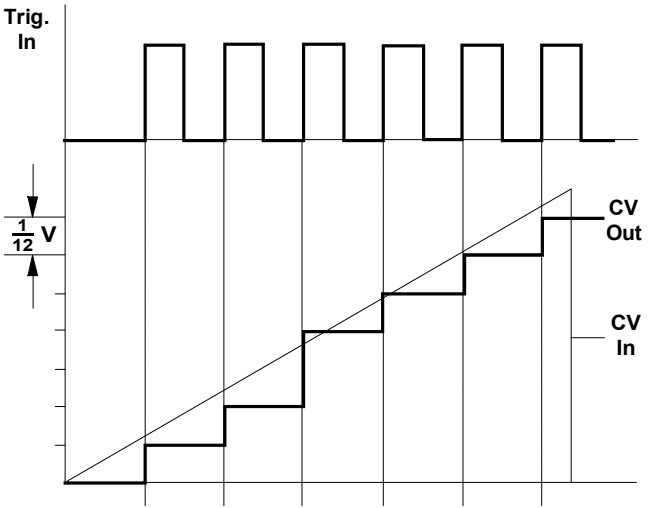

fig. 6: External triggered quantization

❹ Trig. Out • ❽ Trig. Out

At the **trigger outputs** ❹ and ❽ a **trigger pulse** of about 10ms duration is output whenever quantization takes place, i.e. if the output voltage at the control voltage output ❷ or ❻ changes. For example this output can be used to trigger a envelope generator (ADSR) with each new quantization step.

☞ The pulsewidth is fixed to 10 ms. If during this 10 ms a new trigger signal has to be generated, re-triggering takes place. In this case a 5ms pulse appears before the next 10ms pulse is generated.

❾ Transposing CV 1+2

The **transpose input** ❾ enables the simultaneous transposition of both quantizer outputs. The voltage at the transpose input ❾ is quantized to the nearest **semitone**, and **effects both quantizers**, i.e. the voltage at the transpose input is quantized and added to both quantizer outputs.

Example: A voltage of +1.0 V applied to the transpose input shifts both quantizer one octave up.

☞ As the input and output range for all control voltages is 0...+10 V the CV outputs ❷ and ❻ stop at +10 V if the addition of input CV and transpose CV would exceed +10V.

6. User examples

There are manifold applications for the A-156 as any control voltage can be used as a voltage source for the quantizer (e.g. LFO, Random, ADSR, Theremin, Light-controlled voltage, Foot controller, Analog sequencer, MIDI-controlled voltages).

Arpeggio-like effects, especially, can be realized very easily. The patch in fig. 7 can be used as a basic set-up for further experiments.

LFO1 (slow triangle wave) serves as the control voltage source for the quantizer. As the quantizer accepts only positive voltages the attenuator/offset generator A-129/3 has to be used to process negative or symmetrical (i.e. positive/negative) voltages like the LFO output. The A-129/3 converts the symmetrical voltage of the LFO into a purely positive voltage by adding an adjustable fixed positive voltage.

LFO2 (rectangle output) generates a trigger signal. Each low/high transition causes the quantizer to pick out the current voltage of LFO1 and to quantize it, depending on the mode selected (e.g. minor with added seventh).

When a MIDI keyboard is used the arpeggios can be transposed using a MIDI-to-CV-Interface (A-190).

In the patch in fig. 7 LFO1 is reset every 16 trigger events to obtain a periodic arpeggio with 16 “notes“.



Which arpeggio notes are affected by the quantization depends upon the relation of the LFO frequencies. Try different settings for LFO frequencies.

Try also a modified patch without Clock Divider A-160 and without resetting LFO1. In this case the LFOs oscillate without synchronization and the arpeggio length depends upon the frequency relation of LFO1 and LFO2. Very interesting arpeggios appear if the LFO frequencies are not whole number multiples as the patterns then don’t repeat.



Try other control voltages instead of LFO1, e.g. random, analog or digital noise, Theremin, ADSR or others. You will obtain random or non-random patterns that always match with the grid selected.

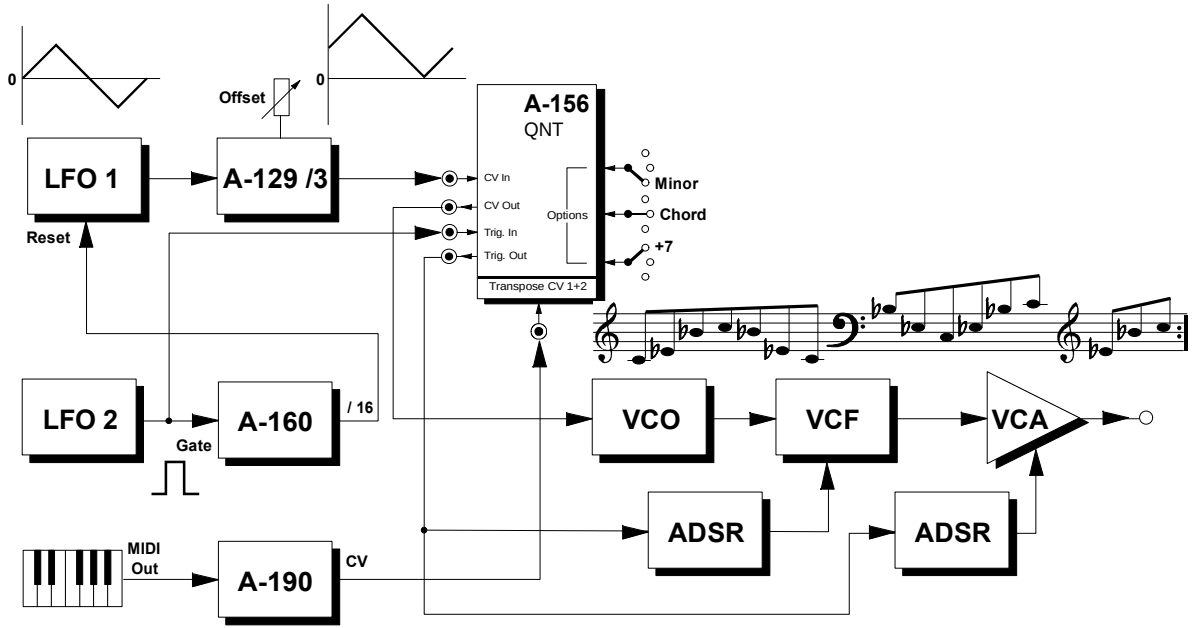

fig 7: arpeggio-like sound patterns

If an ADSR is used as a control voltage source the A-129/3 is no longer required as the ADSR generates only positive voltages.

One very interesting combination is with a Theremin module A-178 as the continuous voltage from the Theremin is converted into “musically correct“ intervals by the quantizer, e.g. only notes from a major scale.

Another typical application is shown in fig. 8: using the **Quantizer A-156 with the Analog/Trigger Sequenzer A-155.**

The upper sequencer generates an 8-note sequence. The voltage "Pre Out 1" controls the VCO pitch and is processed by the quantizer to obtain exact tunings. Without the quantizer it would be very difficult to obtain the correct intervals.

The lower sequencer is synchronized to the upper and runs at 1/8 speed (output “/8“ of the Clock Divider A-160 used as clock input). The lower sequencer controls the transpose input ❾ on the quantizer. Consequently the sequence on the upper sequencer is transposed by the lower sequencer as after each pass of the upper sequencer the lower sequencer advances to the next step.



Instead of the lower sequencer a MIDI keyboard in combination with a MIDI-to-CV interface (A-190) may be used for transposition (see fig. 7).



Instead of the lower sequencer also a random voltage (A-118 Random voltage or combination of Noise and S&H triggered by A-160) may be used. In this case one obtains random transpositions. If it is desired that the transpositions match with certain scales (e.g. major chord) that can be adjusted independently of the quantizer already in use another quantizer is required.

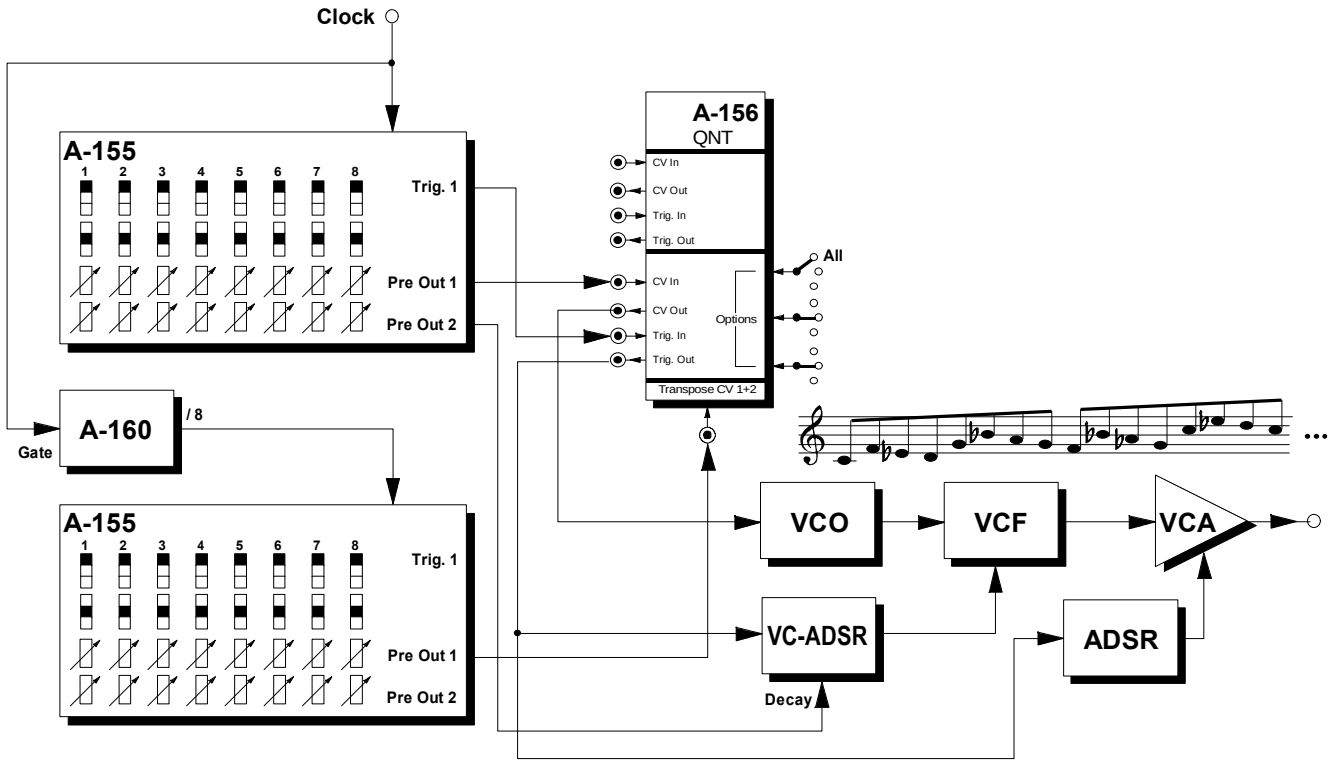

fig. 8: Sequencer and quantizer

7. Patch-Sheet

The following diagrams of the module can help you recall your own **Patches**. They're designed so that a complete 19" rack of modules will fit onto an A4 sheet of paper.

Photocopy this page, and cut out the pictures of this and your other modules. You can then stick them onto another piece of paper, and create a diagram of your own system.

Make multiple copies of your composite diagram, to use for remembering good patches and set-ups.

- Draw in patchleads with coloured pens
- Draw or write control settings in the little white circles

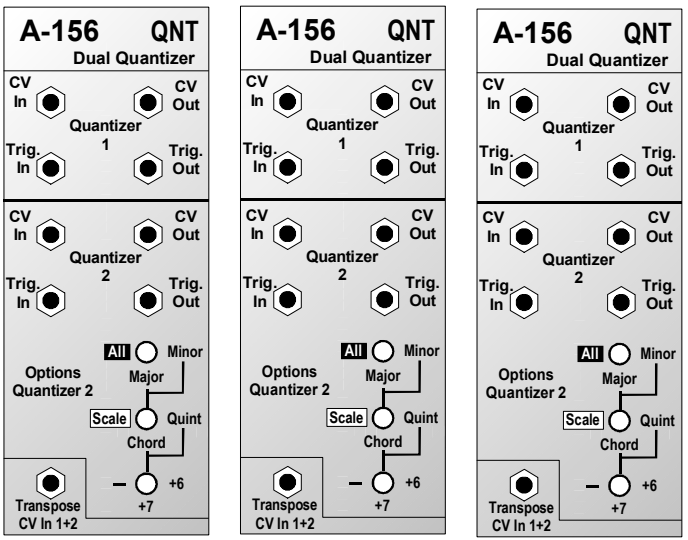

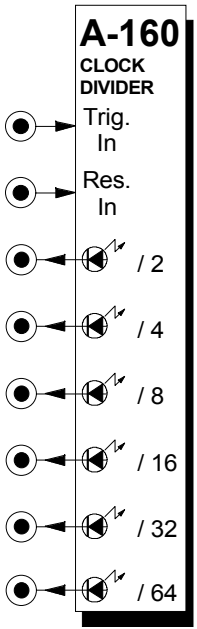

1. Introduction

Module **A-160 (Clock Divider)** is a frequency divider for clock signals, designed to be a source of lower frequencies, particularly for rhythm uses.

The **Trigger input** will take clock signals from, eg., an LFO, MIDI sync, or the gate from a MIDI-CV interface. At the **outputs**, you have access to the **sub-divided clock signals**, from half the clock frequency down to 1/64.

The A-160 also has a **reset input**. Whenever a reset signal is sensed, all outputs are set to zero, until the reset voltage disappears.

The Clock Divider can be used in combination with the **A-161 Clock Sequencer** to produce stepped sequences with a length of from one to eight events.

2. Overview

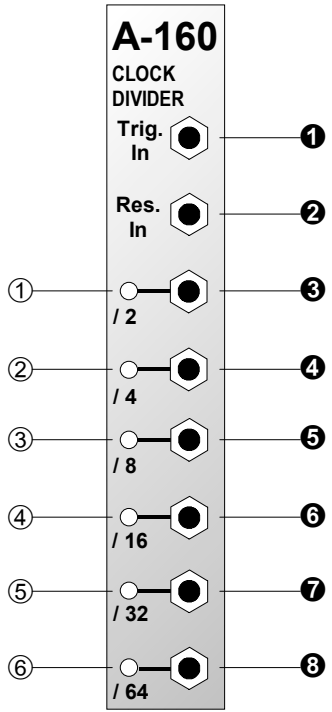

Indicators:

① **LED** : Clock / 2 indicator
② **LED** : Clock / 4 indicator
③ **LED** : Clock / 8 indicator
④ **LED** : Clock / 16 indicator
⑤ **LED** : Clock / 32 indicator
⑥ **LED** : Clock / 64 indicator

In / Outputs:

❶ **Trig. In** : clock signal input
❷ **Res. In** : reset input
❸ **/2** : 1/2 clock frequency output
❹ **/4** : 1/4 clock frequency output
❺ **/8** : 1/8 clock frequency output
❻ **/16** : 1/16 clock frequency output
❼ **/32** : 1/32 clock frequency output
❽ **/64** : 1/64 clock frequency output

3. Indicators

① LED ... ⑥ LED

LEDs ① to ⑥ indicate the status of each of the sub-divided frequencies at outputs ❸ to ❽.

4. In / Outputs

❶ Trig. In

Trigger input: patch the frequency to be divided in here.

❷ Res. In

Socket ❷ is the **reset input** for the A-160. When a reset voltage is sensed, all outputs go to zero, for as long as the reset voltage is present. (ie. a 'static reset')

☞ With a Clock Sequencer (A-161) connected, every time the A-160 senses a reset signal, the A-161 returns to output ❶ .

With the help of the reset input, you can produce sequences with less than eight steps. For instance, by patching output ❼ of the A-161 to the reset input socket ❷ of the A-160 you get a six-step sequence. (Instead of going to step seven, it resets to step one.)

❸ /2 ... ❽ /64

Sockets ❸ to ❽ are the A-160 **outputs**, from which the sub-divided clock signals are available.

5. User examples

"Ping-Pong" effect

The patch in Fig. 1 produces a "Ping-Pong" effect: with each note on the keyboard (gate signal) the audio jumps between left and right outputs - **Out_L** and **Out_R .**

The A-160 is halving the gate frequency, and triggering the A-150 VCS, so that each of its outputs is active only every other note.

ADSR envelope with re-triggering

In the patch in Fig. 2, an ADSR is re-triggered by a square wave LFO, sub-divided in the A-160 by a factor of four (output ❹). The original whole LFO oscillation is patched to the re-trigger input on the ADSR. In this way, a new repeating envelope is created.

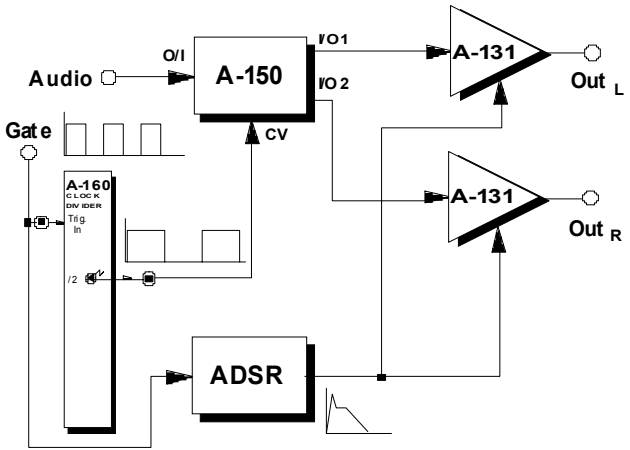

Fig. 1: Ping-Pong effect

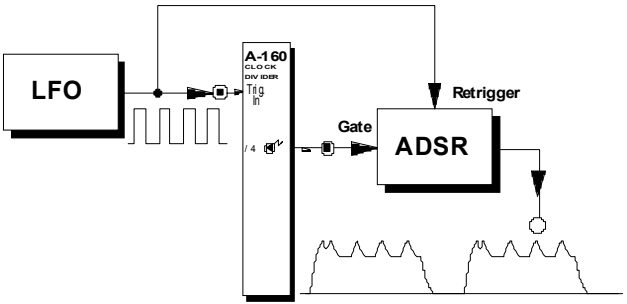

Fig. 2: ADSR envelope with retriggering

By using different outputs on the A-160 it's possible to have envelopes re-triggering different numbers of times, from two to thirty-two.
In addition, by using an A-161, 3-, 5-, 6- or 7-step triggering is possible as well. You patch the A-161's ❹, ❺, ❻ or ❼ output to the gate input of the ADSR. Output ❺, ❻, ❼ or ❽ is patched to the A-160's ❷ reset input socket.

Other suggestions for using the A-160 are in the A-161 Clock Sequencer's section of the manual.

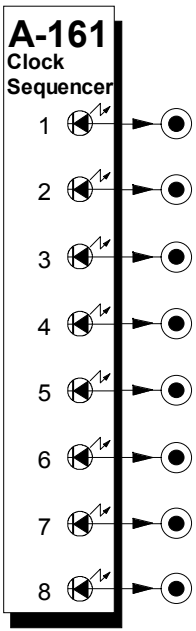

1. Introduction

Module **A-161** is an **eight-step Clock Sequencer** which is internally connected to the **Clock Divider (A-160)**. **Eight outputs** are sequentially switched by the clock signals from the A-160 (see Fig. 1) and can act, for instance, as sequential rhythmic triggers for an envelope. The **reset** on the A-160 also works on the A-161 (instant return to Step 1).

⚠ **Installation in the rack system:**

The A-161 must be positioned **directly to the right of the A-160.**

Join the two modules with the supplied 10-way ribbon cable. Use the **upper** 10-way socket on each module.

Make sure that the ribbon cable isn't twisted, and that the colour-coded section is oriented the same on both modules.

Only join the **A-160** to the **system bus**! Leave the lower 10-way socket on the A-161 unused.

2. Overview

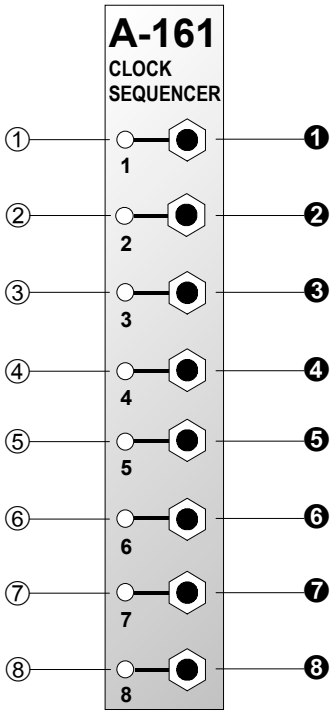

Indicators:

① **LED** ... ⑧ **LED** : Status indicators for each output

Outputs:

❶ **1** ... ❽ **8** : Outputs

3. Indicators

① LED ... ⑧ LED

LEDs ① to ⑧ are the status indicators for outputs ❶ to ❽.

4. Outputs

❶ 1 ... ❽ 8

Outputs ❶ to ❽ are the source of the sequential triggers that the A-161 puts out (see Fig. 1).

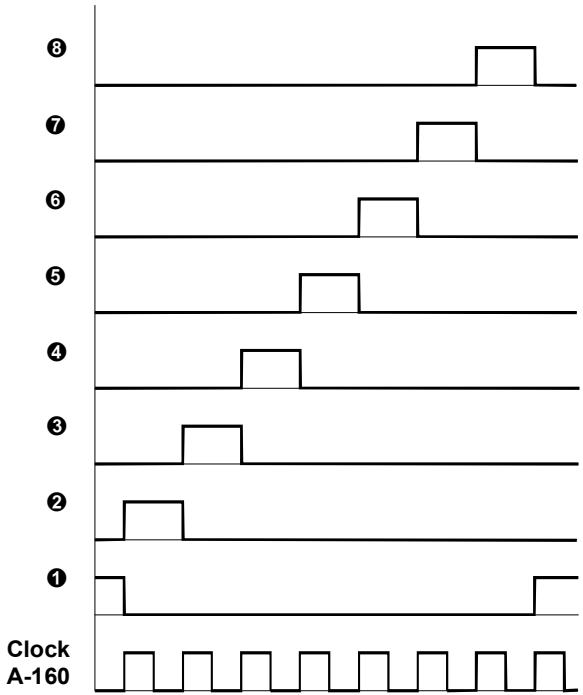

Fig. 1: How the A-161 puts out its signals

5. User examples

"Rhythmatising" notes

In the example in Fig. 2 (see next page) notes played on the keyboard are 'rhythmatised': ie. they're converted into a rhythmical tonal sequence by a combination of four envelopes and the A-161.

The frequency of the LFO's square wave determines the speed of the resulting rhythmical pattern, and the note length as well - in this case, eighth notes.

As soon as a key is played on the keyboard, the gate signal resets the A-160, and the A-161 ❶ output triggers ADSR 1.

While the note is held down, all the outputs give out trigger signals in turn, at eighth-note intervals. In this example, ADSR 2 is triggered by the fifth output, ADSR 3 by the sixth, and ADSR 4 by the eighth. (If a key is held down longer than one whole note, the sequence starts again from the beginning.) The result is a rhythmic pattern, whose pitch is determined by the CV. It's important to turn the VCA gain to zero for maximum effect.

A new note played on the keyboard starts a new pattern.

By altering parameters on the ADSRs, you can change respective note lengths and create syncopations or accents.



As alternatives to ADSRs, you could use Slew Limiters (A-170).

Patch a filter into the VCO signal path, controlled either by the same envelopes, or by another group of four, also triggered by the A-161.

Patch a filter into the VCO signal path, controlled by the four envelopes. Control the VCA with another final ADSR, triggered by the LFO. The result would be an eighth-note pattern with each note equally loud - but in this example, notes 1,5, 6 and 8 are being processed by their respective filter curves, and will have a different sound.

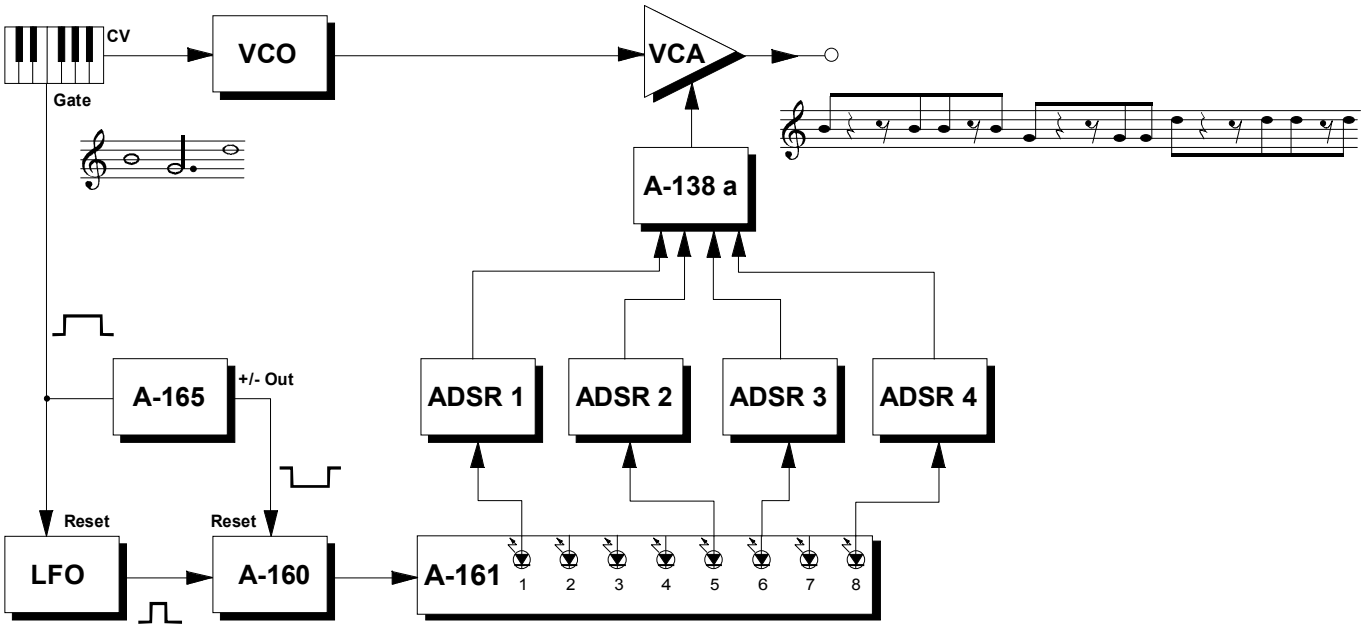

Abb. 2: "Rhythmatising" notes

Instead of an LFO, you can also use **MIDI-clock** signals from a MIDI/CV interface (such as the A-190) to produce MIDI - synchronised patterns.

Creating complex envelopes

A small modification to the previous patch is shown in Fig. 3. Here, the Clock Sequencer outputs are connected to a series of Slew Limiters (A-170), to create one very complex envelope.

The Clock Sequencer triggers the Slew Limiters in sequence, and their various envelopes are mixed in a linear mixer A-138a. The result is a complex envelope which can be patched from the mixer output to anywhere.

You can elaborate on this patch further, by adding other control voltages to the slew limiters' envelopes - for instance:

- an ADSR with a long envelope, triggered by output ❶ on the A-161;
- an LFO output, with or without reset;
- the random output from an A-118;
- an audio signal via an envelope follower (A-119).

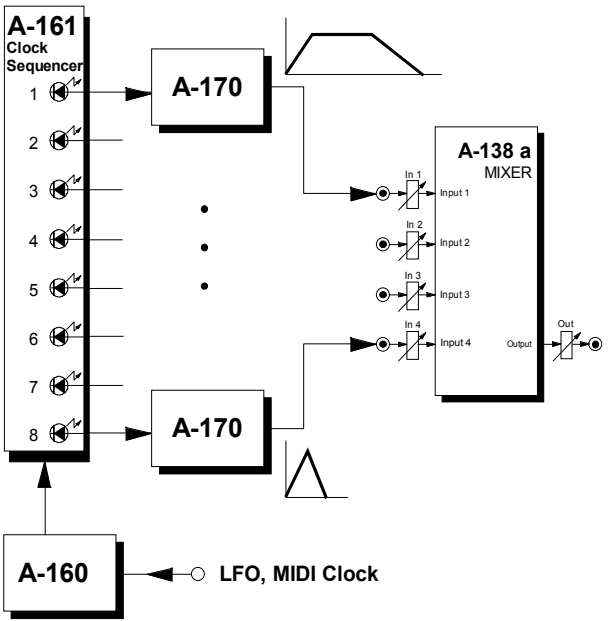

Fig. 3: Creating complex envelopes

If you use more than four modulation sources (Slew Limiter, ADSR, etc.), you'll need two mixers.

Different envelopes with each note played

With the patch in Fig. 4, every time a new note is played, a different envelope will control the VCF.

Each gate signal from the keyboard moves the A-161 another step forward, and so triggers the next envelope. The envelopes obviously need to have different settings for the effect to be noticeable.

The outputs from the envelopes are patched into an A-138a (linear) mixer. At its output, the envelope is available to be patched into the CV input of, most commonly, a VCF or VCA.

After four steps, output ❺ on the A-161 resets the A-160, so that the first envelope is triggered again.

However many (n) envelopes you use (up to a maximum of seven), you must patch the next output on the A-161 (n+1) to the reset input on the A-160. With more than four envelopes, two A-138a mixers will be needed.

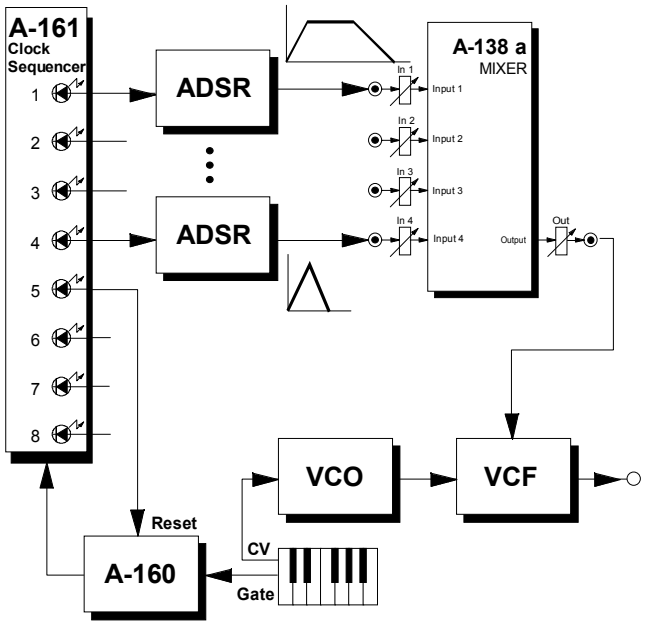

Fig. 4: Different envelopes with each note played

Mini analog sequencer

The patch in Fig. 5 produces a four-step mini analog sequencer.

A clock signal either from an LFO, or a MIDI-CV interface (A-190) sequentially steps through the A-161's outputs. These are fed into the inputs of an A-138a linear mixer.

Whan an A-161 is active, it puts out a +5 V signal. Use the input attenuators on the A-138 to set each of the voltages in the sequence.

The mixer output then sends out a sequence of control voltages, which can be patched to one or more VCOs. The clock signal can be patched to one or more ADSR CV inputs.

After four clock pulses, output ❺ on the A-161 resets A-160, and the sequence begins again from step 1.

By adding another A-138a you can extend the sequence up to eight notes.

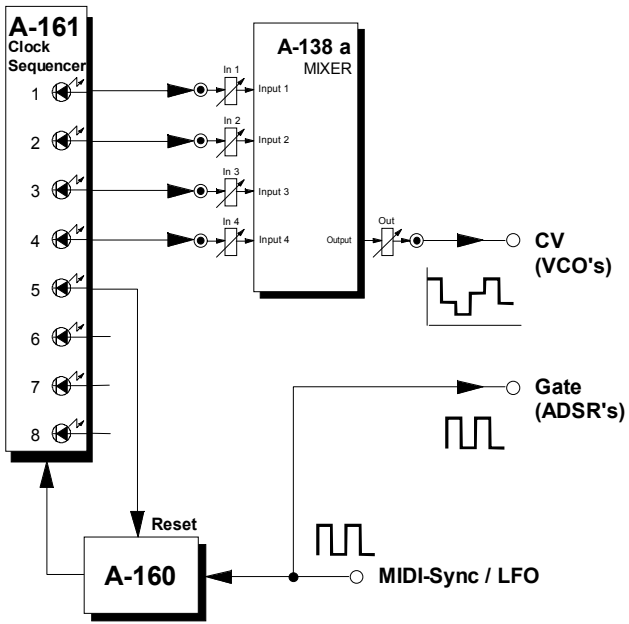

Fig. 5: Mini analog sequencer

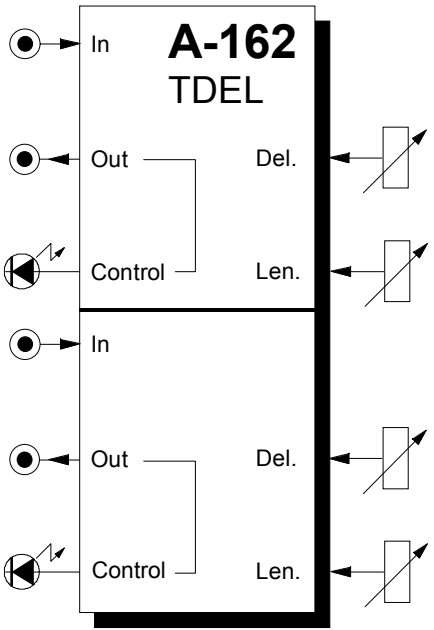

1. Introduction

Module **A-162 (Dual Trigger Delay)** contains **two separate delay circuits** for trigger signals.

This module makes it possible to delay the onset of a trigger pulse, and also change its length (see Fig. 1 on page 3).

On each of the trigger delays, two controls can alter the **onset time** and **duration** of triggers, from 0 up to round about ten seconds. A control LED indicates the onset and duration of the new trigger.

2. Overview

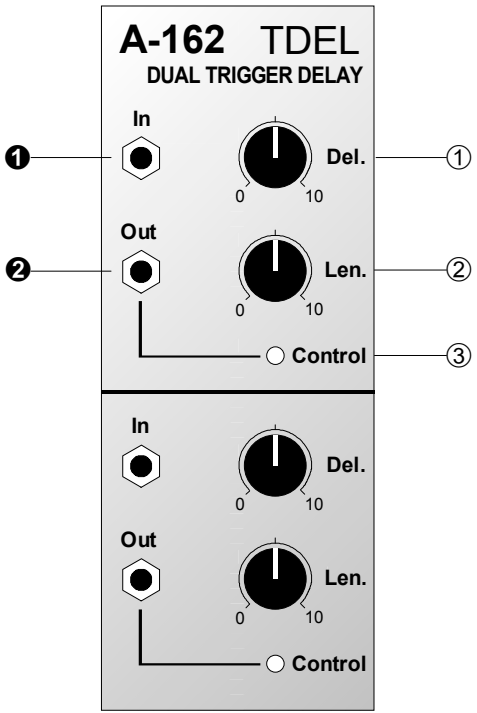

Controls and indicators:

For each trigger delay:

① **Del.** : Delay control

② **Len.** : Trigger length control

③ **LED** : Trigger pulse output indicator

In / Outputs:

❶ **In** : Trigger signal input

❷ **Out** : Output

3. Controls and indicators

① Del.

This control sets the **trigger delay time t_D** (see Fig. 1) in a range from zero to ten seconds.

② Len.

This control ② sets the length t_L of the trigger pulse (see Fig. 1) in a range from zero to ten seconds.

③ LED

LED ③ lights when a trigger pulse is being output.

4. In / Outputs

❶ In

Socket ❶ is the A-162's **input.** This is where you patch the trigger pulse in whose rising edge will start the process.

❷ Out

The delayed trigger signal is output here.

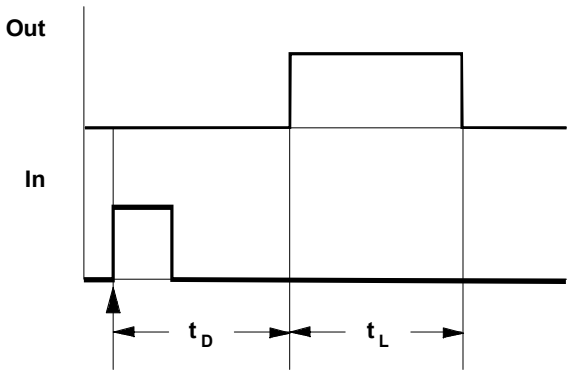

Fig. 1: How the A-162 delays and lengthens a pulse

5. User examples

Modulation delay

The A-162 is particularly useful for **delaying the onset of modulation**, for instance of a VCF, VCO, VCA, etc., by causing the gate to open later. It can also create pseudo echo effects.

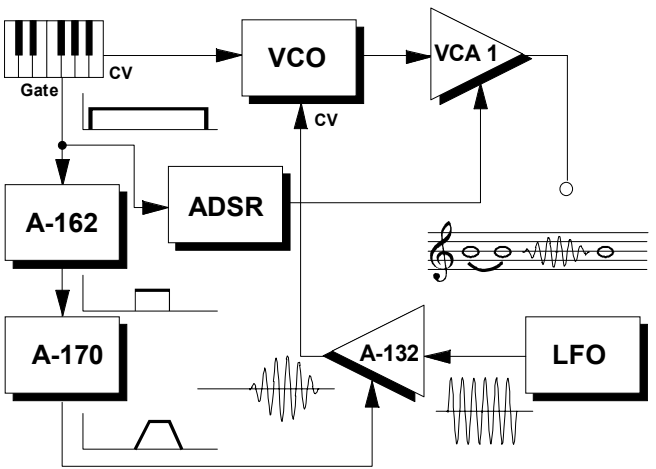

Fig. 2: Delayed vibrato

In the example in Fig. 2, the onset of vibrato (sub-audio frequency modulation of a VCO) is delayed by using the A-162 to delay the gate which will open the VCA. By patching in an AR envelope (in this case an A-170, but an A-140 could also do the job) the intensity of the vibrato can increase and decrease gradually.

Stereo "Echo"

The patch in Fig. 3 produces a sort of stereo echo. When a key is pressed, the sound first comes out of the **Out$_L$** left VCA output, and then, after a delay set by the A-162, the 'echo' comes out of the right VCA output, **Out$_R$**.

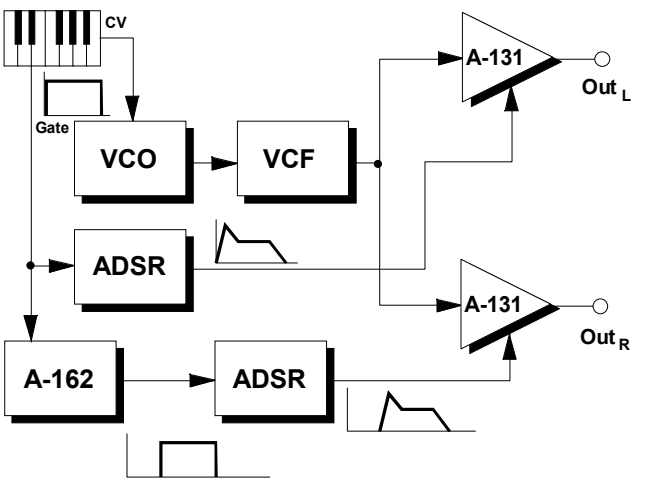

Fig. 3: Stereo "echo"

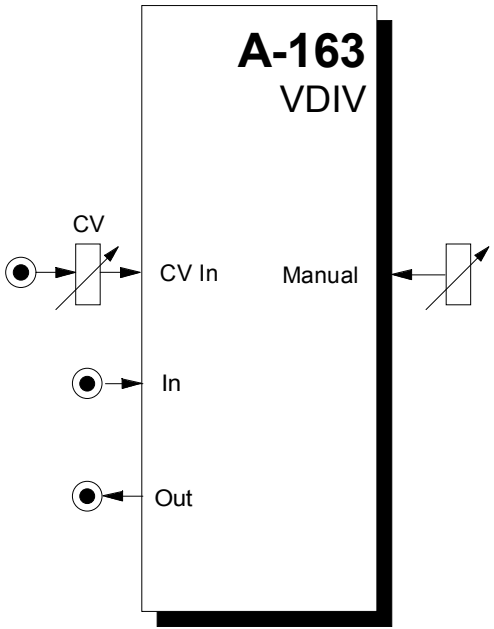

1. Introduction

Module **A-163** is a **voltage controlled audio frequency divider**.

The frequency of the input signal (preferably the rectangle output of a VCO) is divided by an **integer factor N** (N = 1, 2, 3, 4 ... up to about 20). The **output waveform** is **rectangle** with 50% duty cycle.

The **divisor N** can be adjusted **manually** and modulated with an external **control voltage** (e.g. from LFO, ADSR, Random, MIDI-to-CV, Theremin, Light-to-CV, analog sequencer) with attenuator.

The following table shows the differences between the divider modules available in the A-100 system.

	A-115	A-113	A-163
Divisor setting	fixed	manually	voltage contr. + manually
Divisor range	2, 4, 8, 16	1... 24 integer	1... 20 integer
No. of outputs	4 (mixed)	4 (mixed+single)	1
Output waveform	rectangle	sawtooth	rectangle

2. Overview

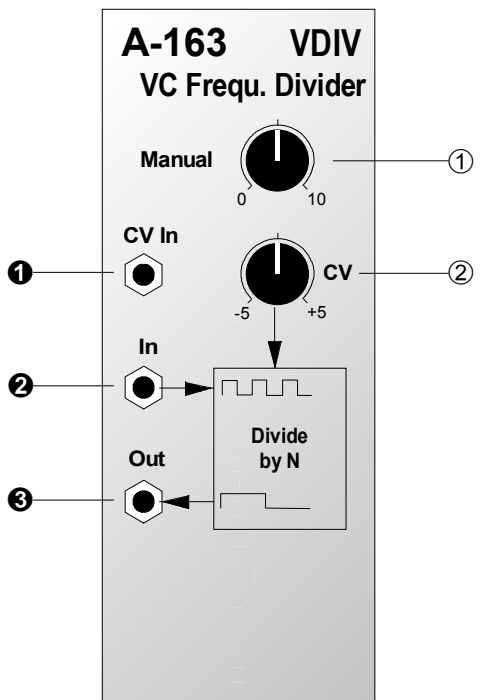

Controls:

① **Manual**: Control for manual setting of the integer dividing factor N

② **CV** : Symmetric (negative-0-positive) attenuator for control voltage at input ❶

- f*ully clockwise*: max. positive level
- *middle position*: level 0
- *fully counterclockwise*: max. negative level

For the first production series the inscription of the CV knob ② is wrongly 0...10 instead of -5...0...+5. The informations in this manual are correct, i.e. left stop = -5, middle position = 0, right stop = +5.

In- / Outputs:

❶ **CV In** : Control voltage input

❷ **In** : Audio input (preferably the rectangle output of a VCO or LFO), i.e. the master frequency for the divider

❸ **Out** : Audio output of the frequency divider (rectangle)

3. Controls

① Manual

With knob ① the **divisor N** is **manually** adjusted. **Integer division** of an audio frequency leads to the so-called **subharmonics**. The table in fig. 1 shows the subharmonic frequencies and pitches of an audio signal C5 (= 523,2 Hz) as master frequency input for the A-163.

Divisor	Freq. [Hz]	Pitch
1	523,2	C^5
2	261,6	C^4
3	174,6	F^3
4	130,8	C^3
5	103,8	As^2
6	87,3	F^2
7	73,4	D^2
8	65,4	C^2

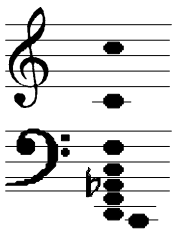

Fig. 1: *Subharmonics* of an audio signal with pitch C5

It becomes apparent that the subharmonics are equivalent to the tones of the **minor chord scale**.

☞ The term "subharmonic" is not quite correct as the A-163 output waveform is rectange with a marked harmonic spectrum in contrast to the "pure" sine waves used in the harmonics theory. For details concerning harmonic contents of different waveforms please refer to the A-110 or A-111 manual (VCO´s). For details about subharmonics please refer to the A-113 manual.

② CV

The positive/negative **attenuation** and **inversion** of the control voltage fed into socket ❶ is adjusted with control ②. The following connections are valid :

Position	Amplification	Effect
-5	-1	invertierted CV
0	0	full attenuation
5	1	original CV (not inverted)

☞ The manual setting of control ① and the external control voltage fed into socket ❶ and attenuated/inverted with control ② are internally added to generate the resulting control voltage that defines the divisor N.

4. In- / Outputs

❶ CV In

The external control voltage (e.g. from an LFO or ADSR) used to modulate the divisor N is fed into the **CV input ❶** .

❷ In

Socket ❷ is the **audio input** of the module. This input is connected to the audio source (waveform preferable rectangle from an VCO or LFO). The frequency of this signal (= master frequency) is divided by N.

❸ Out

Socket ❸ is the output of the module. Here the **subharmonic** (rectangle) is available.

Frequency division of control signals
The output ❸ of the module is AC-coupled. This means that no slow signals (e.g. 0.5 Hz LFO) can be divided. To obtain a DC-coupled output the capacitor C7 on the A-163 pc board has to be replaced by a jumper (short circuit). This modification leads to a 0/+5V rectangle output that can be used for slowly changing signals too. Please refer to the service manual for the position of C7.

5. User Examples

Sub-Oscillator

With the A-163 an audio sub-oscillator can be realized very simply. The rectangle output of a VCO is connected to the audio input of the A-163. The audio outputs of the VCO (e.g. sawtooth) and the A-163 are mixed together e.g. with an A-138b. Thus one obtains a VCO with sub-oscillator to enhance the bass sound of the VCO. The interval between VCO and sub-oscillator can be set manually or voltage controlled.

Subharmonic Glissando

One obtains very interesting effects if a dynamically changing control voltage (e.g. from ADSR, LFO, Joy Stick, Theremin, Random or similiar) is used to define the divisor N of the A-163. This leads to a special kind of glissandos containing only the subharmonics of the master frequency.

In fig. 1 the triangle signal of a LFO (e.g. A-145) is used to control the divisor N of the A-163. As only integer divisors occur both time and frequency quantization takes place. A so-called "subharmonic glissando" appears, i.e. separate tones with the same length are generated (subharmonics derived from the master frequency of the VCO signal).

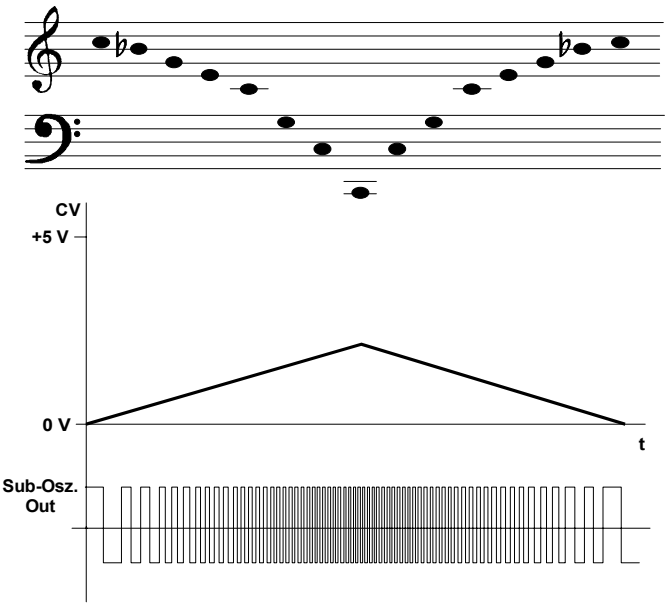

Fig. 1: Subharmonic glissando

Frequency Multiplication

In combination with the PLL module A-196 frequency multiplication can be obtained. For details refer to the A-196 manual.

6. Patch-Sheet

The following diagrams of the module can help you recall your own **Patches**. They're designed so that a complete 19" rack of modules will fit onto an A4 sheet of paper.

Photocopy this page, and cut out the pictures of this and your other modules. You can then stick them onto another piece of paper, and create a diagram of your own system.

Make multiple copies of your composite diagram, and use them for remembering good patches and set-ups.



- Draw in patchleads with colored pens.
- Draw or write control settings in the little white circles.

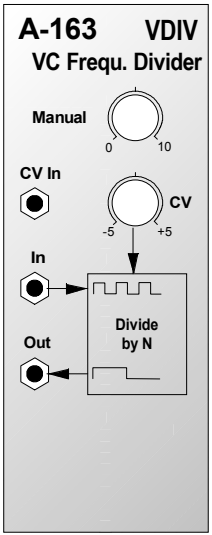

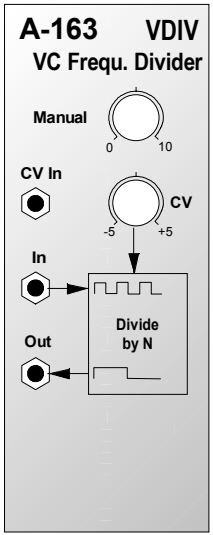

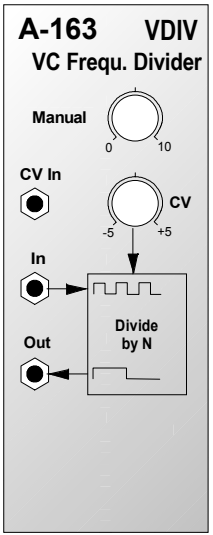

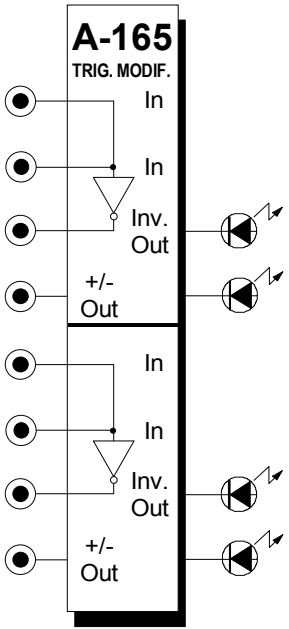

1. Introduction

Module **A-165 (Dual Trigger Modifier)** contains two separate trigger modifiers, to use with logical / digital levels (Gate, Clock, Trigger). Each half of the module enables signals generated by the A-100 to communicate with other instruments (such as an external sequencer), or is simply used where you want to reverse a trigger polarity.

Whatever signal is patched into the input is inverted by the module, and fed out of the Inv. Out (**inverted output**) socket.

At the same time, a trigger signal of roughly 50 ms is generated every time an edge of the trigger pulse is sensed (negative as well as positive). This trigger signal is available at the **+/- output**.

Two **LEDs** act as indicators showing the level of signal available at the two outputs.

2. Overview

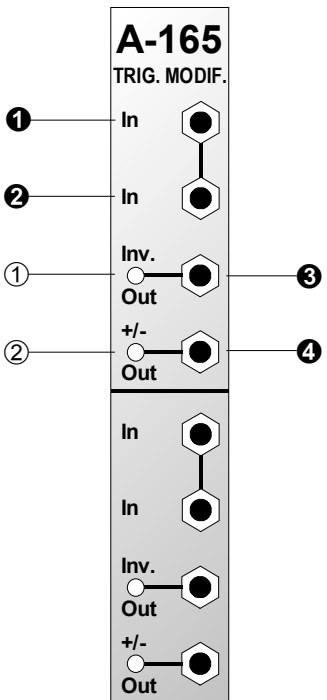

Indicators

① **LED** : Status indicator for the inverted trigger signal at output ❸

② **LED** : Status indicator for the trigger pulse generated, and available at output ❹

In / Outputs

❶ **In** : Input for trigger signal

❷ **In** : ditto, linked to input ❶

❸ **Inv. Out** : Output for the inverted trigger signal

❹ **+/- Out** : Output for the trigger pulses generated by the A-165

3. Indicators

① LED

This LED is the **status indicator for the inverted trigger signal** at output ❸.

② LED

This LED is the **status indicator for the trigger pulses the A-165 generates**, available at output ❹.

4. In / outputs

❶ In • ❷ In

Sockets ❶ and ❷ are the interconnected **Inputs** to the A-165. This is where the trigger signal to be modified is patched in.



In practice, the original and inverted trigger signal are often both needed at the same time, so it's possible to use these two inputs as a mini-multiple - using one of them to send the original trigger to another module.

❸ Inv. Out

The inverted trigger signal is available at **output ❸** (see Fig. 1).

❹ +/- Out

Output ❹ carries the trigger signals generated by both the leading and falling edges of the original trigger signal (pulse length: approx. 50 ms). See Fig. 1.

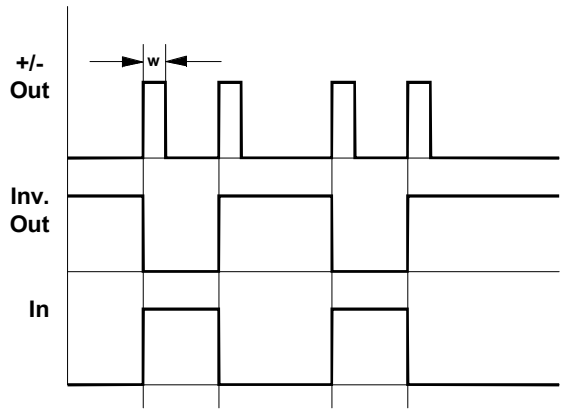

Fig. 1: How the A-165's outputs relate to the input.

5. User examples

Repeating notes played on keyboard

In the patch in Fig. 2 each note played on the keyboard produces two sounds: the first when the key is pressed, and the second when it's released.

To achieve this, output ❹ (+/-) on the A-165 is used. The ADSR attack time needs to be very short.

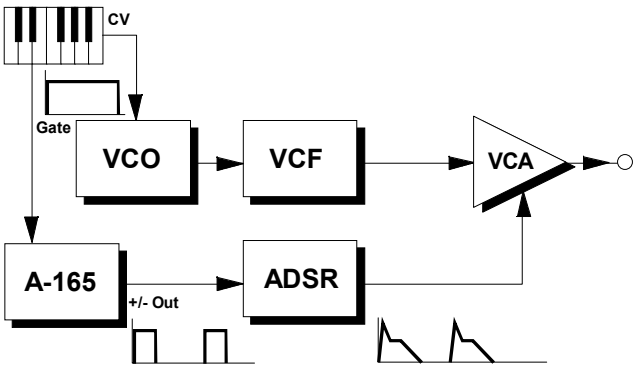

Fig. 2: Double sounds from single notes played.

Repeating notes with ping-pong echo

A modification of the previous patch is shown in Fig. 3. In this case, the sound is repeated when the key is released, but this time from a different output: at the original key-press, the sound goes to one VCA (**Out$_L$**), and on release goes to the other VCA (**Out$_R$**).

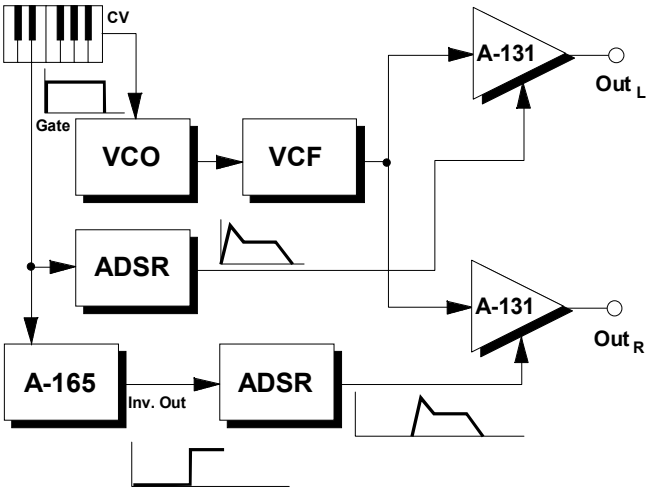

Fig. 3: Repeating notes with ping-pong echo effect.

The patch sounds particularly good if the triggering is provided by a sequencer (like the MAQ 16/3) instead of a keyboard.

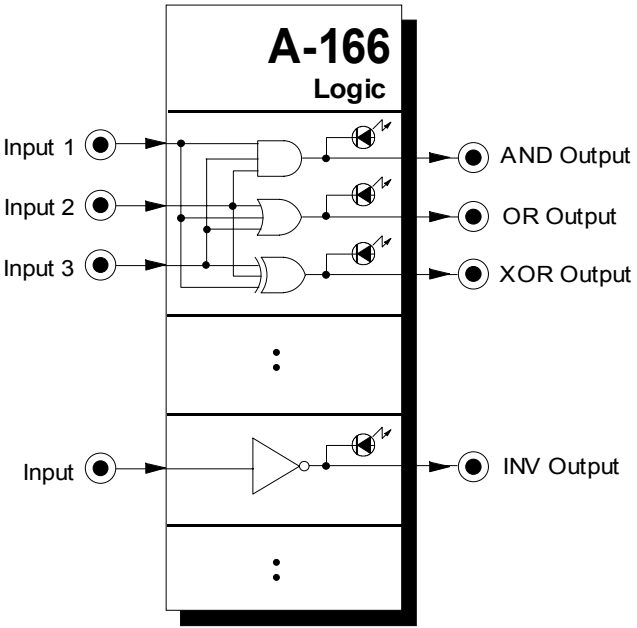

1. Introduction

Module **A-166** is a **dual logic device** to combine digital control signals.

It contains **2 identical units** with **3 inputs** for each unit. The logical states of the inputs ("1" = high / "0" = low) are **linked** together in 3 ways: **AND, OR, EXOR** (exclusive OR).

The three functions are available **simultaneously** at **three outputs with LED display** of the output states.

Additionally **two inverters** are avaliable to obtain the **inverted functions NAND, NOR** and **NEXOR**.

The **input sockets** of each triple unit are "**normalized**", i.e. the switched contact of socket 2 is connected to input 1 and the switched contact of socket 3 is connected to input 2.

A **typical application** is the combination of digital signals of the A-100 (gates, clocks, triggers), e.g. to obtain **"gated" clocks** or **rhythmic clock patterns**.

2. LOGIC - Overview

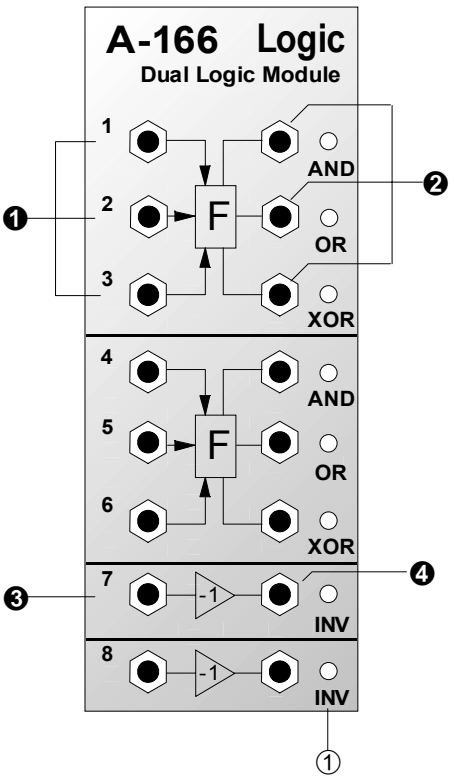

Controls:

① **LED** : Display of the logical state for the corresponding output

In / Outputs:

❶ (**Input) 1, 2, 3** : Inputs for the AND, OR, and XOR function

❷ **(Output) AND**,**OR**,**XOR:** Output of the corresponding function

❸ (**Input)**: Inverter input

❹ **(Output) INV**: Inverter output

3. Controls

① LEDs

The LEDs display the logical state of the corresponding output (on = logical “1” / high, off = logical “0” / low).

4. In / Outputs

❶ Input 1 • Input 2 • Input 3

The sockets Input 1, 2 and 3 are the **common inputs** of the logical functions AND, OR and XOR. The digital control signals that have to be linked (e.g. gate, clock) are connected to these sockets.

If “normal” analog voltages are used as inputs any voltage less than about +1 V corresponds to a logical “0” (low); voltages above about +2 V are taken as logical “1” (high).

The sockets of each triple unit are "**normalized**", i.e. the switched contact of socket 2 is connected to input 1 and the switched contact of socket 3 is connected to input 2. Provided that no plug is inserted into socket 1 resp. socket 2 the socket is connected to the input above it.

Inputs			Outputs					
1	2	3	AND	OR	XOR	NAND	NOR	NEXOR
0	0	0	0	0	0	1	1	1
0	0	1	0	1	1	1	0	0
0	1	0	0	1	1	1	0	0
0	1	1	0	1	1	1	0	0
1	0	0	0	1	1	1	0	0
1	0	1	0	1	1	1	0	0
1	1	0	0	1	1	1	0	0
1	1	1	1	1	0	0	0	1

Table 1: Logical functions of the A-166

This simplifies the usage of the module if only 2 signals have to be combined. Otherwise the third input would have to be fed with the neutral level for the desired logical function. As the logical functions have different neutral levels this would cause problems. E.g. the logic functions AND and OR have different neutral input levels: "1" is the neutral state for AND, "0" is the neutral state for OR. In case of a fixed input level for the unused input one of the two functions (AND or OR) would work no longer.

❷ AND • OR • XOR

These are the output sockets for the three logical functions. The output of each state depends upon the on the three inputs (refer to table 1). A logical “0” corresponds to about 0V (in every case less than +1V), “1” to +12V (at least +10V).

❸ Input

Socket ❸ is the **input of the inverter**.

❹ INV Output

At the **inverter output** ❹ the inverted signal of the inverter input ❸ is available. A logical “0” at the input is converted to “1” and vice versa.

By means of the inverters it is possible to invert a signal before it is fed into one of the two logical units. In addition the inverse logical functions **NAND** (negated AND), **NOR** (negated OR) and **NEXOR** (negated exclusive OR) can be realized (see table 1, right columns).

The voltage ranges that correspond to “0/low” and ”1/high” state for the inputs and outputs of the inverters are the same as for the logical functions.

5. User Examples

The A-166 can be used to combine all kind of digital signals of the A-100 (i.e. clock, gate or trigger signals).

Therefore manifold applications like gated clocks or the creation of complex rhythmical structures are possible. A typical example is the combination of signals coming from a clock source (e.g. clock ouput of A-190, rectangle output of a LFO), clock divider (A-160), clock sequencer (A-161) or analog/trigger sequencer (A-155) with each other or with other digital signals like gate or trigger e.g. from the MIDI interface A-190, Theremin A-178, Trautonium/Ribbon Controller A-198, Trigger delay A-162, VC decay/gate A-142, VC divider A-163 or external input A-119.

A typical example shows the patch in fig. 1. The outputs “1”, “5” and “7” of the clock sequencer A-161 are “added” with the A-166 (OR function) and this signal is “gated” with the clock output “8” of the clock divider A-160 (AND function).

Likewise it is possible to derive a gate signal from an audio signal using the external input/envelope follower A-119 and combine this with other clock, gate or trigger signals.

Fig. 1: Patch for generation of rhythmic clock signals

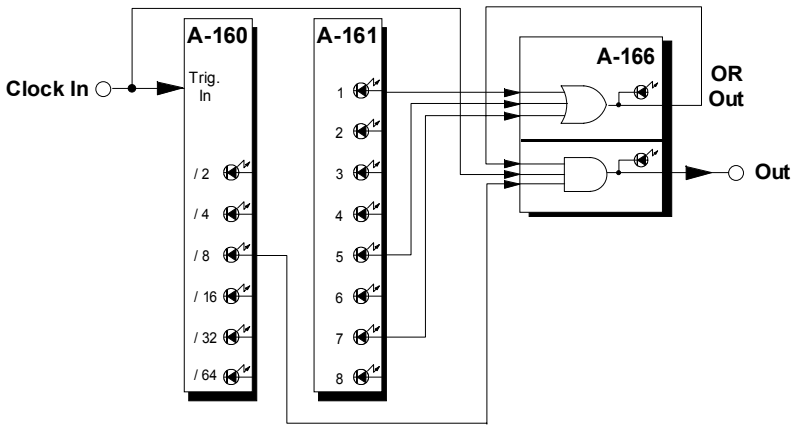

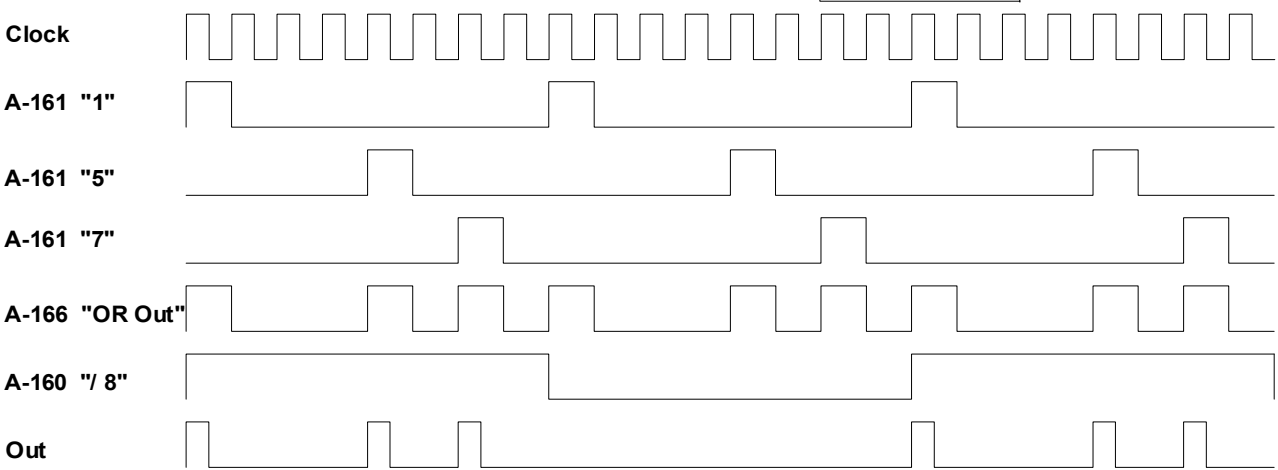

6. Patch-Sheet

The following diagrams of the module can help you recall your own **Patches**. They're designed so that a complete 19" rack of modules will fit onto an A4 sheet of paper.

Photocopy this page, and cut out the pictures of this and your other modules. You can then stick them onto another piece of paper, and create a diagram of your own system.

Make multiple copies of your composite diagram, and use them for remembering good patches and set-ups.

Draw in patchleads with colored pens.

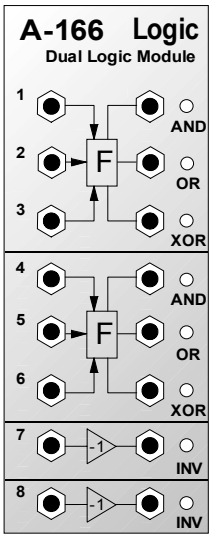

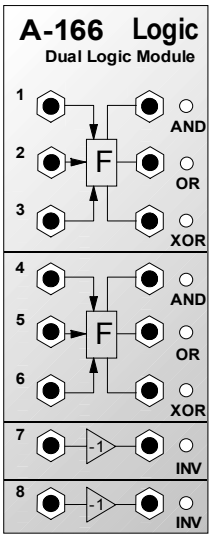

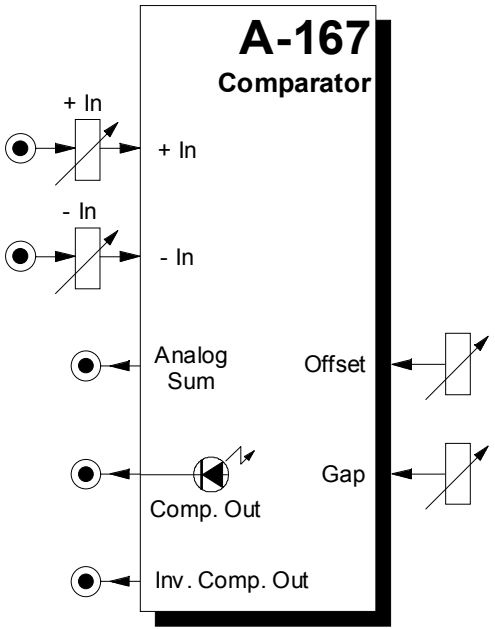

1. Introduction

Module A-167 **compares analog voltages** and derives a **gate signal**. The **state** of the gate output (low/high) depends upon which of the voltages is higher.

It is possible to **compare two external voltages** (+In and -In) **or** an **external voltage** (+In or -In) **with a manually adjustable value** (Offset control). Both analog inputs +In and -In are equipped with an **attenuator**.

A **LED** shows the current state of the gate output.

The **Gap** control is used to adjust a so-called "**hysteresis**". As long as this control is set to zero the switching levels for both on and off state of the gate signal are identical. As soon as the Gap control is turned up the switching levels for on and off state fall apart and a so-called hysteresis appears.

Normal and inverted gate outputs are available.

In addition the **internal voltage a1*(+In) - a2*(-In) + Offset** is available at the Analog Sum socket. Consequently the module can be used as **subtractor** and **offset generator** too.

2. Overview

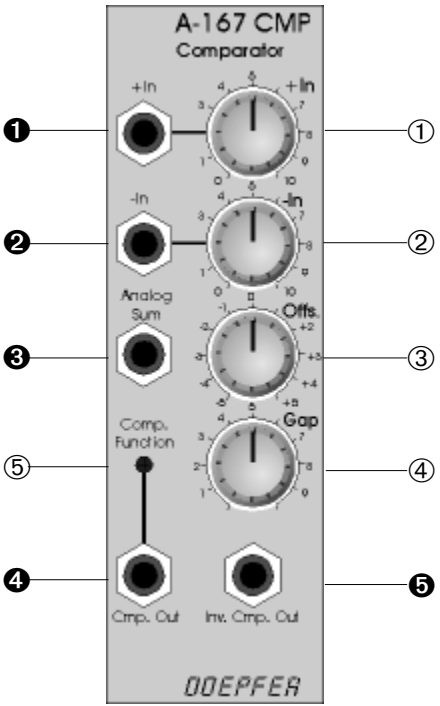

Controls:

① **+ IN** : Attenuator for voltage at input ❶

② **- IN** : Attenuator for voltage at input ❷

③ **Offs.** : Offset control

④ **Gap** : Control to adjust the hysteresis

⑤ **Comp. Function** : Gate indicator (LED)

In- / Outputs:

❶ **+ In** : Non-inverting voltage input

❷ **- IN** : Inverting voltage input

❸ **Analog Sum** : Analog voltage output, makes available the internal voltage:

a1*(+In) - a2*(-In) + Offset

❹ **Cmp. Out** : Gate output

❺ **Inv. Cmp. Out** : Inverted gate output

3. Basic principle

The module generates internally the voltage U_{SUM}:

$$U_{SUM} = a_1 \bullet In^+ - a_2 \bullet In^- + Offset$$

The factors a_1 and a_2 represent the manual attenuators of the inputs In^+ und In^-. According to the sign (+/-) of the resulting voltage U_{SUM} the gate output is activated:

$U_{SUM} > 0$: Gate = "high" (~ +10V)
$U_{SUM} \leq 0$: Gate = "low" (~ 0V)

The internal voltage U_{SUM} is available at the socket ❸. Consequently the module can be used to attenuate and subtract analog voltages and to add a fixed offset voltage to a voltage (similar to one of the sub-units of the Attenuator/Offset Generator A-129-3).

The Gap control ④ is used to adjust the so-called "hysteresis" voltage. As long as this control is set to zero the switching levels for both on and off state of the gate signal are identical. As the Gap control is turned up the switching levels for on and off state fall apart and a so-called *hysteresis* appears. In this case after a state change of the gate output the internal voltage U_{SUM} has to vary at the hysteresis amount before the gate state will change back.

Fig. 1 illustrates the Gap resp. hysteresis function by means of a triangle LFO input signal.

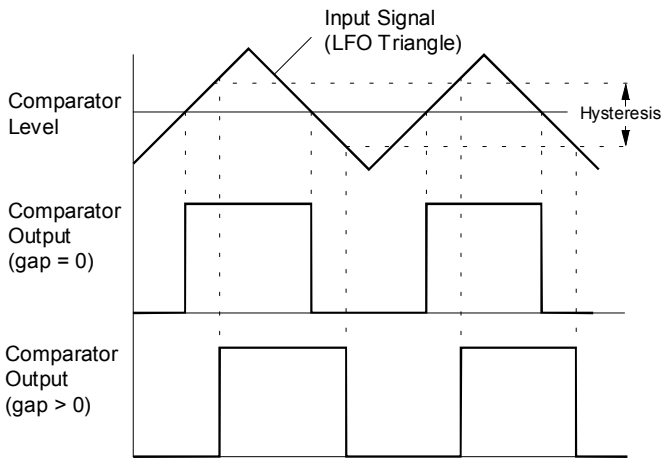

Fig. 1: Effect of the Gap control on the gate signal

4. Controls

① + In • ② - In

The controls ① and ② are the attenuators for the voltages fed to the sockets ❶ resp. ❷.

③ Offs.

This control **adds** a manually adjustable **Offset voltage**, i.e. a fixed value is added to the internally calculated voltage difference $a_1 \cdot In^+ - a_2 \cdot In^-$. The adjustable offset range is approximately -10 V (fully counterclockwise) to +10 V (fully clockwise). In the middle position the offset is approximately 0 V.

If only one of the inputs is used the module works as an **offset generator** (and attenuator); the attenuated and - if input ❷ is used - inverted voltage with offset is available at the Analog Sum socket ❸ (see fig. 2 and chapter 6).

④ Gap

This control is used to adjust the **hysteresis** (see chapter 3 for details).

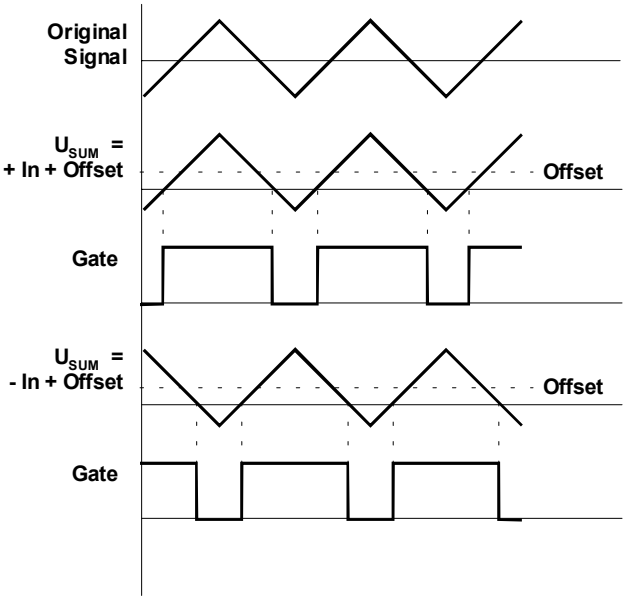

Fig. 2: A-167 as attenuator / offset generator

⑤ Comp. Function

LED ⑤ lights up if the internal voltage U_{SUM} is positive (> 0V) and consequently the Gate output is "high" (~ +10V).

5. In - / Outputs

❶ + IN

The **input signal** fed into this socket is attenuated with control ① and **added** to the internal voltage (U_{SUM}).

❷ - IN

The **input signal** fed into this socket is attenuated with control ② and **subtracted** from the internal voltage (U_{SUM}).

❸ Analog Sum

At this socket the **internal voltage U_{SUM}** is available (see chapter 3).

❹ Cmp. Out • ❺ Inv. Cmp. Out

The **Gate output ❹** is "high" (~ +10V) if the internal voltage U_{SUM} is positive. Otherwise it is "low" (~ 0V). The **inverted Gate output ❺** always has the opposite state of the normal gate output ❹. Consequently this output is "low" if the internal voltage U_{SUM} is positive. Otherwise it is "high".

6. User examples

The main application of module A-167 is the **generation of gate signals depending upon analog voltages**, e.g. a gate signal that depends upon the present value of a LFO (triangle), ADSR or random signal can be generated and used to control a voltage controlled switch that on the other hand switches different control voltages or audio signals. More examples shows the following table:

Signal at + In	Signal at - In	Offset	Meaning concerning U_{SUM} at ❸
•		> 0	(positive) offset generator
•		< 0	(negative) offset generator
	•	> 0	(positive) inverting offset generator
	•	< 0	(negative) inverting offset generator
•	•	0	subtractor
•	•	> 0	subtractor + (positive) offset generator
•	•	< 0	subtractor + (negative) offset generator

The module can even be used to add the **free-running mode** to each **ADSR** (e.g. A-140 or A-141) similar to a LFO but with separate controls for rising and falling edge and exponential waveforms - in contrast to the linear waveforms of a LFO.

In the patch of fig. 3 the *ADSR-LFO* is **gated** by means of the gate input of the A-140 (e.g. with another LFO or a gate signal controlled by a keyboard or MIDI interface). This means that the "ADRS-LFO" oscillates only as long as the gate input of the A-140 is "high". The waveform and frequency of the ADSR-LFO is determined by the controls Attack, Decay, Sustain and Release of the A-140, and Offset and +In of the A-167. The Gap setting of the A-167 is irrelevant.

☞ Only certain control settings lead to an "ADSR-LFO" (especially Offset, +In and Sustain) !

The patch in fig. 4 shows another *ADSR-LFO*. Waveform and frequency are deterrmined by the parameters Attack and Release of the A-140, and Offset, Gap and +In of the A-167. Decay and Release of the A-140 are irrelevant.

☞ Even in this patch only certain control settings lead to an "ADSR-LFO" (Offset, +In and Gap) !

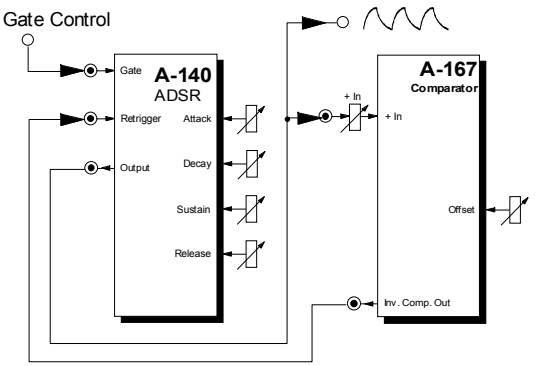

Fig. 3: *ADSR-LFO 1*

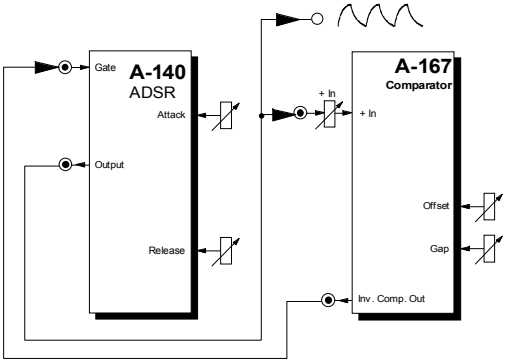

Fig. 4: *ADSR-LFO 2*

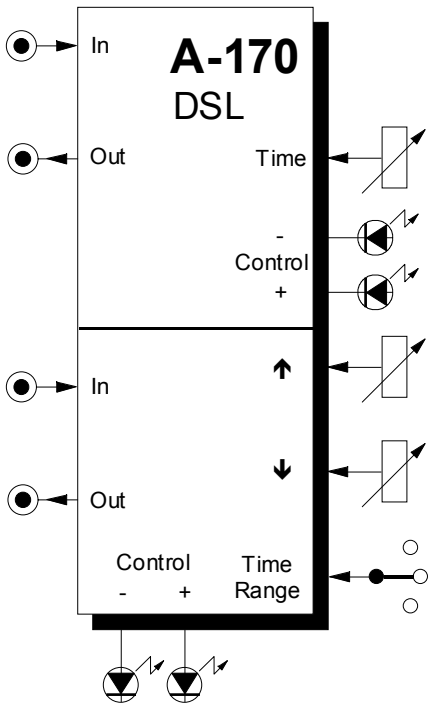

1. Introduction

Module **A-170 (Dual Slew Limiter)** contains two separate slew limiters, also known as **portamento controllers** or **integrators**.

The **upper SL** has just one **joint control**, which sets both **rise** and **fall** times (c. 0 ...10 sec).

The **lower SL** has **separate controls** for rise and fall times, and can therefore be used as a simple AR envelope generator. Over and above this, you can set the overall range for these parameters, with a three-position switch, as on the full ADSRs.

Both slew limiters have two LEDs each, to show the state of the rising and falling voltages.

2. Overview

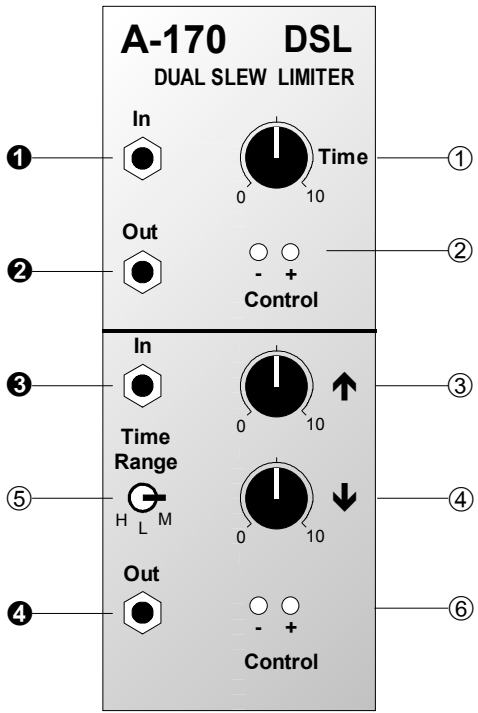

Controls and indicators:

① **Time** : rise / fall time control (input 1)

②, ⑥ **- LED** : negative voltage indicator

②, ⑥ **+ LED** : positive voltage indicator

③ ↑ : rise time control (lower SL)

④ ↓ : fall time control (lower SL)

⑤ **Time Range**: 3-position switch for overall rise / fall time range (lower SL)

In / Outputs:

❶, ❸ **In** : Input

❷, ❹ **Out** : Output

3. Controls and indicators

① Time

This control sets the **rise / fall time t_C** of slew limiter 1 (see Fig. 1) in a range from 0 to 10 seconds.

② - LED • ⑥ - LED

LEDs ② and ⑥ are the status indicators for the slew limiters' **falling edges**.

③ + LED • ⑦ + LED

LEDs ③ and ⑦ are the status indicators for the slew limiters' **rising edges**.

④ ↑

With this control you set the lower slew limiter's **rise time t_A** (see Fig. 1), within the range set by switch ⑥.

⑤ ↓

The fall time **t_R** of the lower slew limiter (see Fig. 1) is set with this control, within the range set by the range switch ⑥.

⑥ Time Range

Switch ⑥ sets the time range for the lower slew limiter's **rise t_A** and **fall t_R** times.

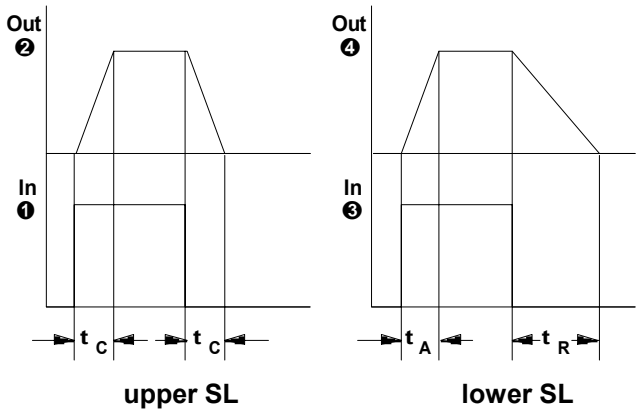

Fig. 1: A-170 response

Three time ranges are available:

- **L** (low): 0 ... ~ 0.5 sec
- **M** (medium): 0 ... ~ 10 sec
- **H** (high): 0 ... some minutes

The actual times are also dependent on amount of voltage change (0 V → 1 V goes quicker than 0 V → 10 V !).

4. In /Outputs

❶ In • ❸ In

Sockets ❶ (upper SL) and ❸ (lower SL) are the slew limiters' **inputs**. Patch in the voltage you want to modify here, and use the time controls t_C (upper SL) and/or t_A, t_R (lower SL) to alter the waveform's rise and fall characteristics.

❷ Out • ❹ Out

❷ (upper SL) and ❹ (lower SL) are the outputs for the modified signal.

For **precision voltage control** (for instance of VCO pitch or portamento) only use the **upper slew limiter**.

Because the diodes in the lower slew limiter are voltage-dependent, there is a voltage offset of about 0.5 V. This naturally makes it unsuitable for precise 1V / octave work, but for simple voltage control or in use as an AR envelope generator, this is no problem at all.

5. User examples

Portamento

The example in Fig. 2 shows the A-170 (**upper SL !**) as a **portamento generator**. With this patch, independently controllable portamento is created every time a note is played. Use control ① to set the portamento time.

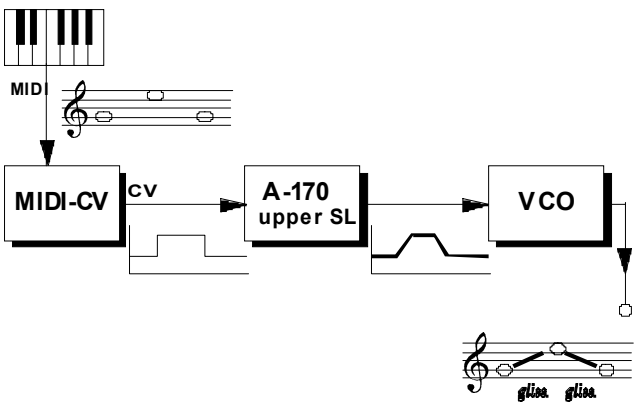

Fig. 2: The A-170 as a portamento generator

Slew limiter as AR envelope generator

You can use the lower A-170 as a simple AR envelope generator, for instance in the example in Fig. 4, to help create a certain percussive bass sound.

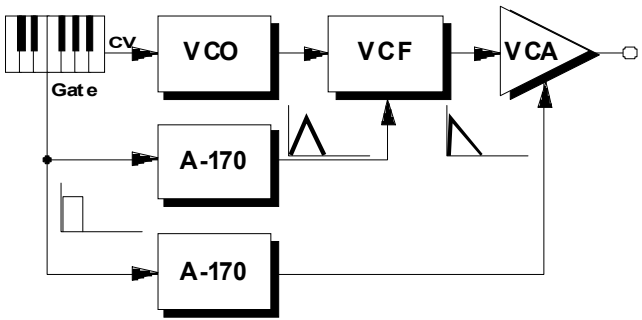

Fig. 3: The A-170 as a simple AR generator

"Glissando AM"

The patch in Fig. 4. produces an interesting sound. The two VCOs are set to harmonically related intervals. A keyboard pitch control voltage is patched to both VCOs - directly to VCO1 (the carrier), and via the A-170 upper slew limiter to VCO2 - the modulator.

When a new note is played, the carrier VCO reacts immediately, while the modulator VCO glides gradually to the pitch of the note, producing a complex timbral sweep.

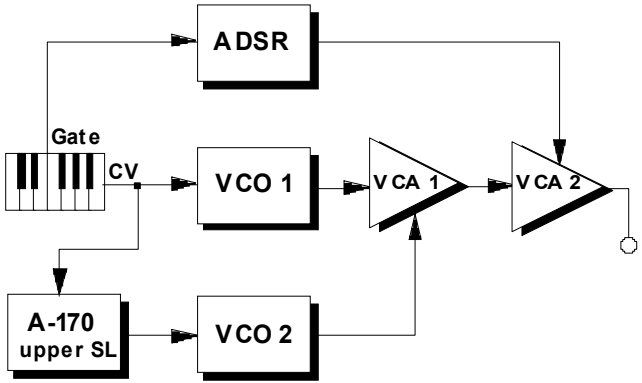

Fig. 4: "Glissando AM"

☞ It's important to keep the time level of the A-170 less than the shortest note length played.

Creating complex envelopes

A combination of the Clock Divider / Sequencer (A-160/161) and a number of A-170 slew limiters can produce complex envelopes (see Fig. 5).

The Clock Sequencer triggers the Slew Limiters in sequence, and their various envelopes are mixed in a linear mixer A-138a. The result is a complex envelope which can be patched from the mixer output to anywhere.

You can further elaborate on this patch, by adding other control voltages to the slew limiters' envelopes - for instance:

- an ADSR with a long envelope, triggered by output ❶ on the A-161;
- an LFO output, with or without reset;
- the random output from an A-118;
- an audio signal via an envelope follower (A-119).

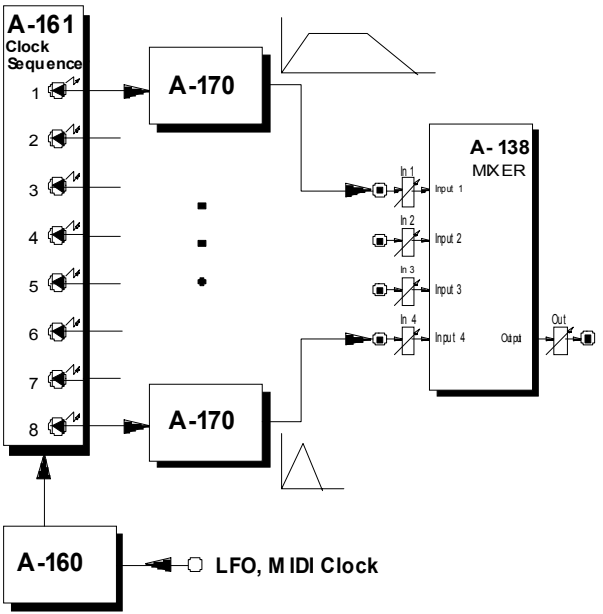

Fig. 5: Creating complex envelopes

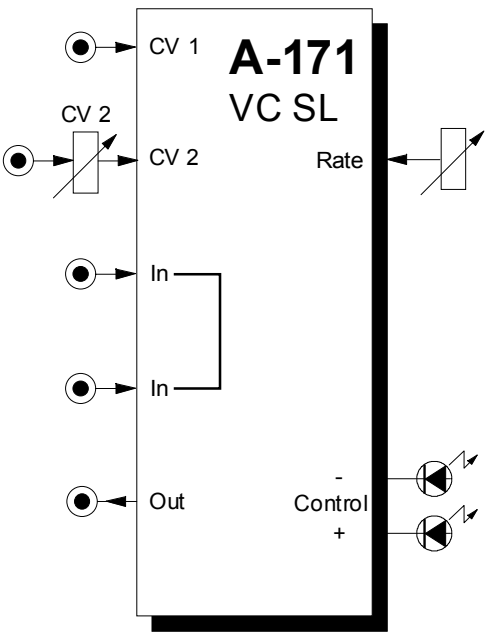

1. Introduction

Module **A-171** is a **voltage controlled slew limiter**, otherwise known as a **portamento controller** or **integrator**.

Whenever there is an abrupt transition in the voltage present at the input, the Slew Limiter **works as an integrator**, slowing down the transitions in the output signal - so that abrupt transitions are **sloped.** The speed of the transition is governed by the rate control.

As well as manual setting of this slope, the A-171 also gives you the possibility of **voltage control of the slope's gradient** by patching in an appropriate voltage to two CV inputs, one of which has an attenuator for level adjustment.

Two LEDs serve as **status indicators t**o show the relative amounts of positive and negative signals at the output.

2. Overview

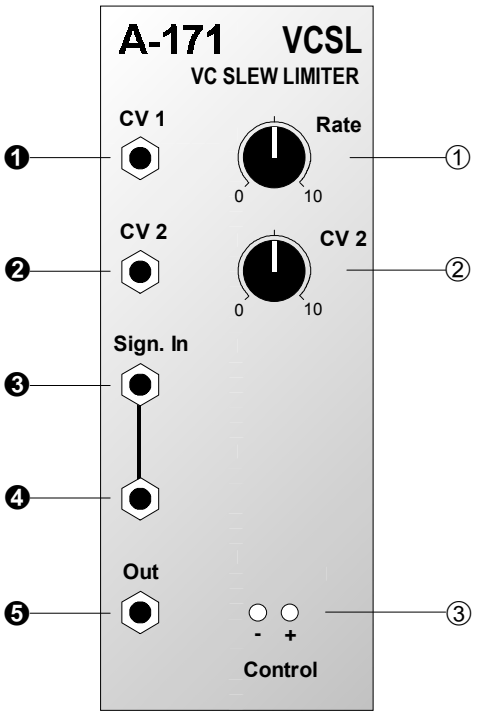

Controls and indicators:

① **Rate** : control governing the transition speed of the modified signal

② **CV 2** : attenuator for control voltages at ❷

③ **LEDs** : status indicators for voltages at output ❺

In / Outputs:

❶ **CV 1** : input for voltages to control transition speed

❷ **CV 2** : ditto, but with level controlled by attenuator ②

❸ **Sign. In** : signal input

❹ **Sign. In** : ditto, interconnected with ❸ (and so a "mini multiple")

❺ **Out** : output

3. Controls and indicators

① Rate

With this control you adjust the transition speed of the slope created by the slew limiter (see Fig. 1). The speed can be adjusted to produce transitions from about 10 down to nearly 0 seconds.

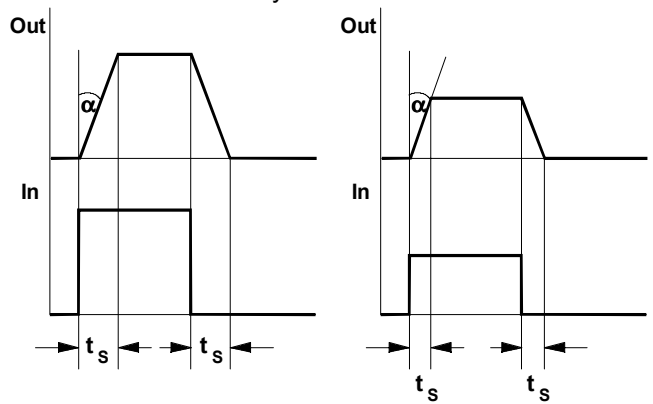

Fig. 1: How the A-171 transforms a signal.

When Rate = 10, the output signal is nearly identical to the input, i.e. the max. slew speed or min. slew time is selected. When Rate = 0 one obtains the minimum slew speed (= maximum slew time, i.e. ~ 10 seconds).

☞ Pay attention that the control behaviour of the A-171 is reverse that of the "normal" slew limiter A-170. The control of A-171 is controls the speed (rate), the controls of the A-170 control the time.

② CV 2

Use **Attenuator** ② to control the amount of CV input ❷ to affect the transient speed.

③ LEDs

The LEDs ③ are **status indicators** of the relative mix of positive ("+") and negative ("-") signals at the output. The brighter they are, the higher the voltage.

4. In / Outputs

❶ CV 1 • ❷ CV 2

The transition speed produced by the A-171 depends on a combination of the setting on the Rate control, and any voltages patched into the CV inputs ❶ and ❷. The level of the voltage at CV input ❷ can be controlled by **attenuator** ②.

❸ Sign. In • ❹ Sign. In

These interconnected sockets are the signal **input** to the VC Slew Limiter. Whatever signal is patched in to these inputs will have any sudden voltage jumps smoothed into more gradual rises and falls, at a rate depending on the manual control and the CV inputs.

❺ Out

The modified signal is available at **output ❺**.

5. User examples

Voltage controlled slew limiting in a MIDI system

Unlike the A-170 Slew Limiter, the A-171 can have the rate of rise and fall voltage controlled.

In particular, there's the possibility of controlling the **Rate** parameter via a MIDI-CV interface (eg. A-190, A-191) as you **play in real time**. The next example makes use of this feature.

Adjustable portamento

The example in Fig. 2 uses the A-171 as a **portamento generator**. The portamento time is adjustable, and with this patch can be controlled from a MIDI keyboard. Simply set the A-191's CV2 output to your chosen MIDI controller (eg. Portamento Time). Pay attention that an increasing control voltage causes a shorter transition time. To obtain the opposite behaviour a voltage inverter A-175 can be used (A-191 CV output -> A-175 input, A-175 output -> A-171 control input).

Slew Limiter as VC AR generator

You can also use the A-171 as a simple **AR generator**, for instance with the percussive sound in the example in Fig. 3. The attack/release parameters can be controlled by MIDI, for instance by the voltage at the CV2 output on the A-190.

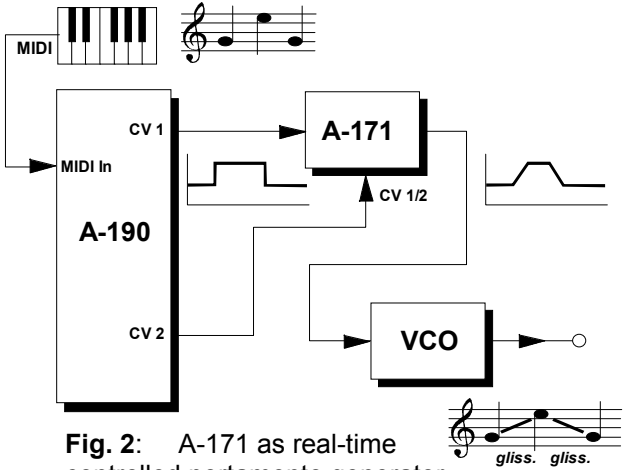

Fig. 2: A-171 as real-time controlled portamento generator.

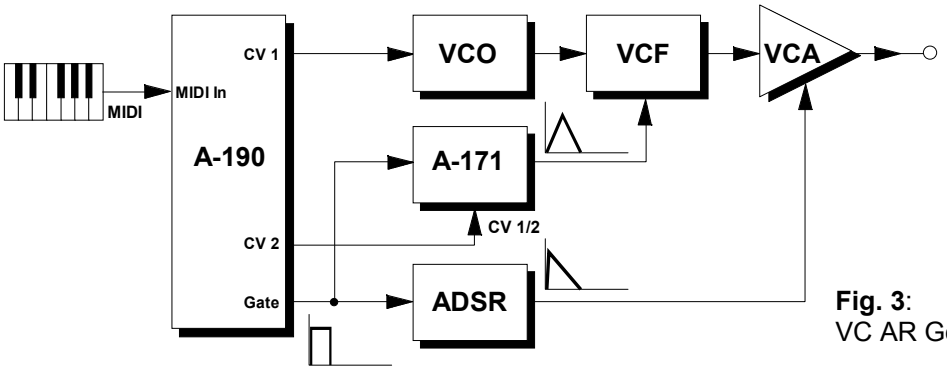

Fig. 3: A-171 as VC AR Generator.

Producing complex controllable modulations

With a combination of a Clock Divider / Sequencer (A-160 / A-161) and a series of A-171 VC Slew Limiters, complex modulation systems are possible (see Fig. 4).

The Clock Sequencer is patched into a series of Slew Limiters, each set to produce a different envelope. These envelopes are patched into an A-138 Mixer (the version with linear response) .

The level of each of the envelopes is adjusted with the mixer.

With the help of an A-191 MIDI-CV converter and a suitable MIDI Controller, you can control the rise and fall rates of the envelopes in real time.

In the patch in Fig. 4, the clock sequencer is triggered by the internal MIDI-synced LFO in the A-191 converter. Alternatively, you can use a free-running LFO to trigger the sequencer.



Try expanding this patch by adding another control voltage ingredient into the inputs at the A-138 mixer, as well as the envelopes from the slew limiters - for instance:

- ADSR with a slowish envelope, triggered from the first of the A-161's outputs,
- the output from an LFO (with or without Reset),
- Random output from an A-118,
- Audio signals in connection with the A-119 Envelope Follower.

A-171 as DC coupled low pass filter

The A-171 can be used as a simple DC coupled filter ("DC coupled" means, that even very slow sub-audio frequencies can be filtered). An example is the usage of the A-171 as external low pass filter for the PLL module A-196. For details refer to the A-196 manual.

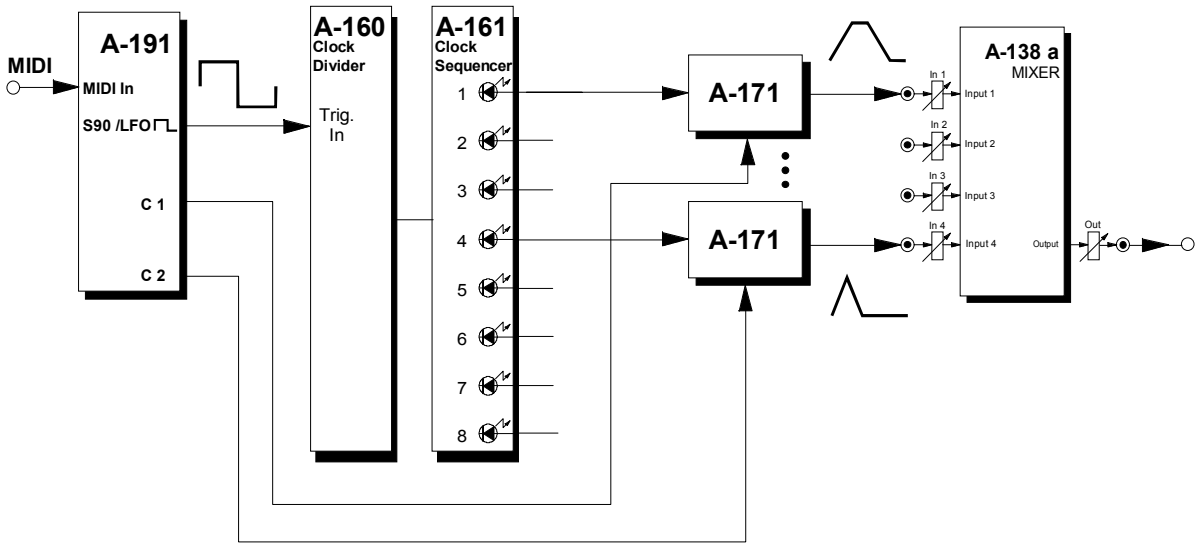

Fig. 5: Producing complex controllable modulations.

6. Patch-Sheet

The following diagrams of the module can help you recall your own **Patches**. They're designed so that a complete 19" rack of modules will fit onto an A4 sheet of paper.

Photocopy this page, and cut out the pictures of this and your other modules. You can then stick them onto another piece of paper, and create a diagram of your own system.

Make multiple copies of your composite diagram, and use them for remembering good patches and set-ups.



- Draw in patchleads with colored pens.
- Draw or write control settings in the little white circles.

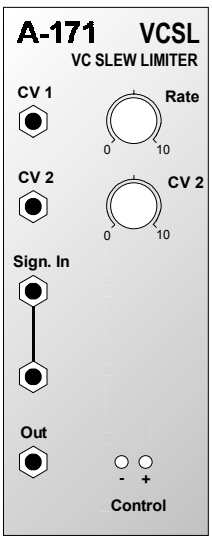

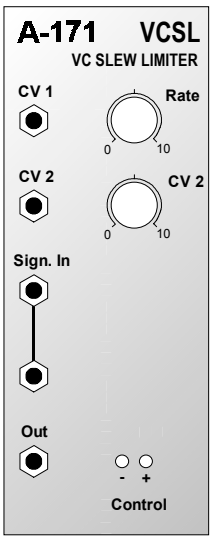

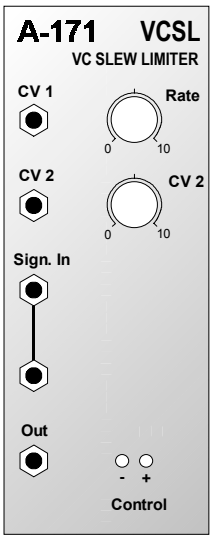



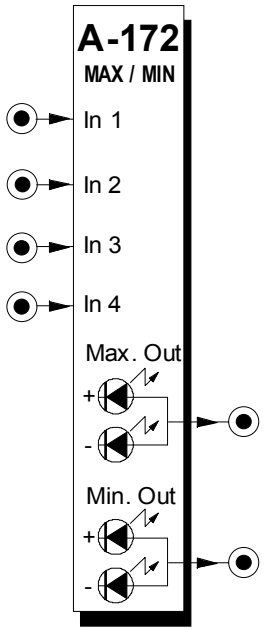

1. Introduction

Module A-172 is a **Minimum/Maximum selector**. It has available **four analog inputs** and **two analog outputs (Minimum** and **Maximum)**.

The module **permanently picks** the **maximum resp. minimum voltage** out of the four input signals and outputs these voltages to the maximum resp. minimum jack socket.

Two **LEDs** for each output help you keep track of the output signals. One LED displays positive, the second LED negative output voltages.

2. Overview

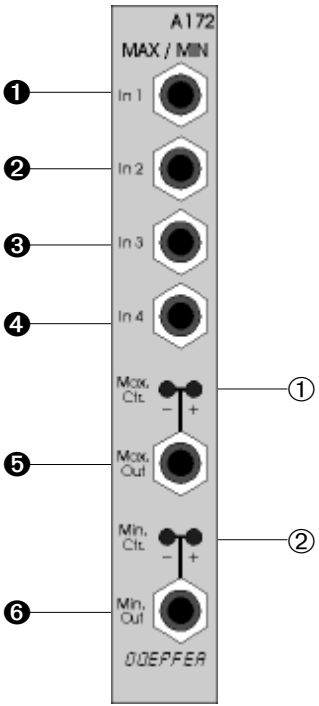

Controls and indicators:

① **Max, Ctr.** : monitoring LEDs for Maximum output

② **Min. Ctr.** : monitoring LEDs for Minimum output

In- / Outputs:

❶ **In 1** ... ❹ **In 4** : Signal inputs

❺ **Max. Out** : Maximum output

❻ **Min. Out** : Minimum output

3. Basic principles

The module permanently picks the maximum resp. minimum voltage out of the four analog input signals and outputs these voltages to the maximum resp. minimum jack socket. Fig. 1 shows the working principle by means of three sine waves with different frequencies and levels. The upper section shows three input signals , the lower section shows the corresponding outputs.

4. Controls

① Max. Ctr. • ② Min. Ctr.

These LEDs display the positive resp. negative part of the output signals at the Maximum ❺ resp. Minimum output ❻.

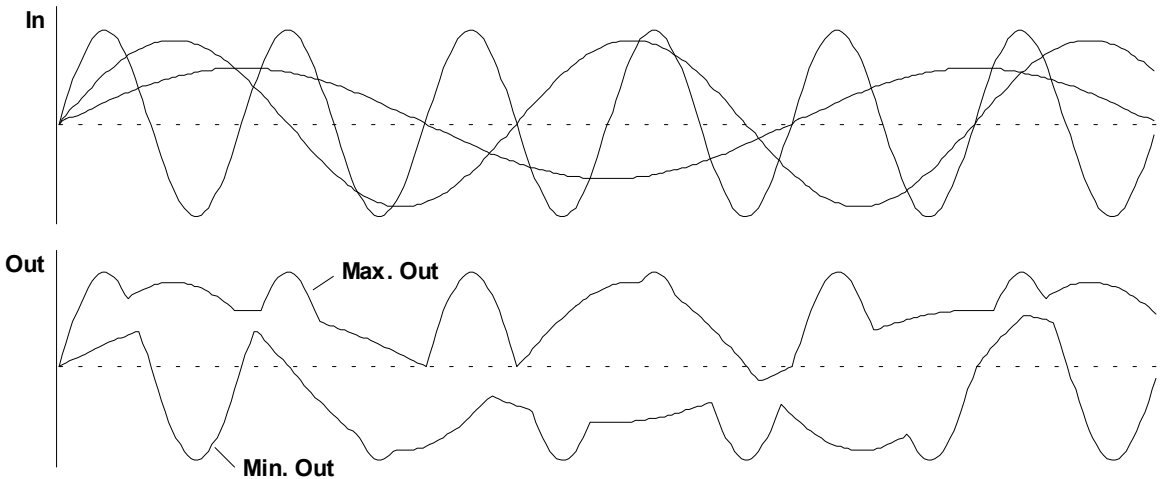

Fig. 1: Maximum/Minimum module - how it works

5. In- / Outputs

❶ In 1 ... ❹ In 4

The **input signals** are connected to these sockets. At least 2 signals are necessary to obtain the maximum resp. minimum function. Unused inputs have to be left open. Do not connect unused inputs to GND as this is equal to 0V and different from an open socket !

❺ Max. Out

This is the **Maximum output** of the module.

❻ Min. Out

This is the **Minumum output** of the module.

6. User Examples

The main application of the module is the **processing of control voltages**, e.g. random voltages, ADSR, LFO, S&H, ribbon CV, Theremin CV and similar.

To **adjust offset** and **amplitude** for each input independently (i.e. to bring the signal into the right "position" with the desired level) we recommend to combine the module with the A-129-3 Slew Limiter/ Attenuator/Offset Generator (see fig. 2).

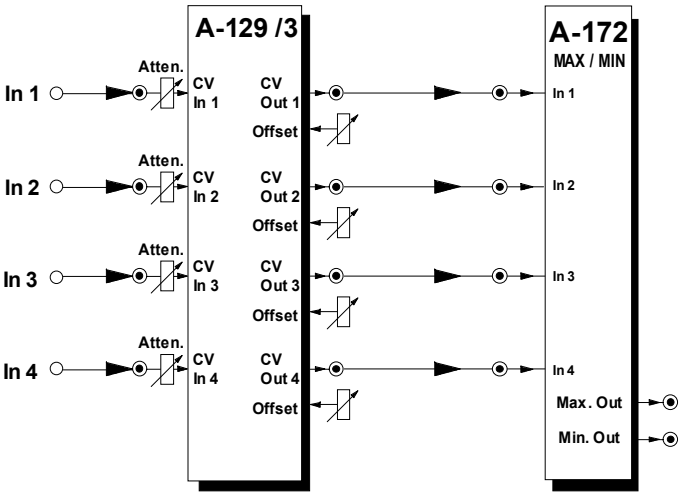

Fig. 2: Max/Min detector with individually adjustable attenuation and offset for each input signal

The module is useful for **audio processing** too. Using the outputs of a VCO as inputs creates new waveforms. Using the outputs of two or more VCOs leads to new interference sounds that are different from VCO mixing, ring modulation or hard/soft sync.
Even the **combination of control and audio signals** as inputs makes sense and causes a kind of pulse-width modulation even for saw, triangle or sine by **clipping** the upper/lower parts of the waveform.

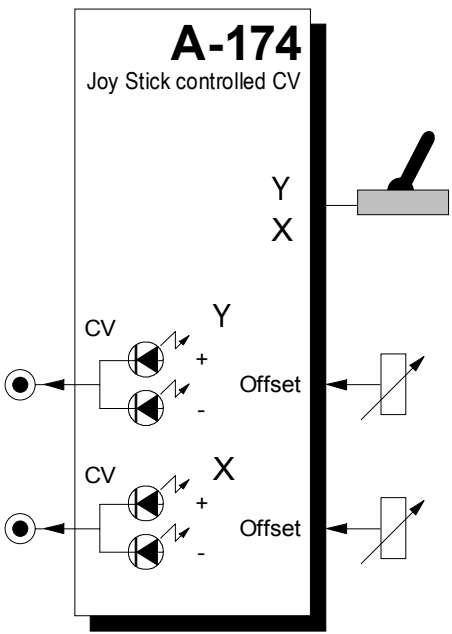

1. Introduction

Module **A-174** (Joy Stick) outputs **2 control voltages** generated by a spring-loaded X/Y cross potentiometer (so-called joy stick). If the spring is removed for one direction the joy stick is no longer spring-loaded for this direction (as the spring is destroyed when removed this cannot be re-established !).

For each output the **voltage offset** (zero setting) can be adjusted. Each output is equipped with **2 LED**s for positive/negative display of the output voltages.

Module A-174 is an universal two-dimensional control voltage source to control the parameters of other A-100 modules by hand, e.g. filter frequency or resonance (VCF), loudness or modulation depth (VCA), stereo-panning (A-134), quad-panning (2xA-134), phasing (A-125), frequency shift (A-126), morphing (A-135 + A-144), pitch bend (VCO), modulation speed (A-147), decay (A-142) or other envelope parameters (A-141) and many more.

A high quality joy stick manufactured by **ALPS** is used in the A-174.

2. Overview

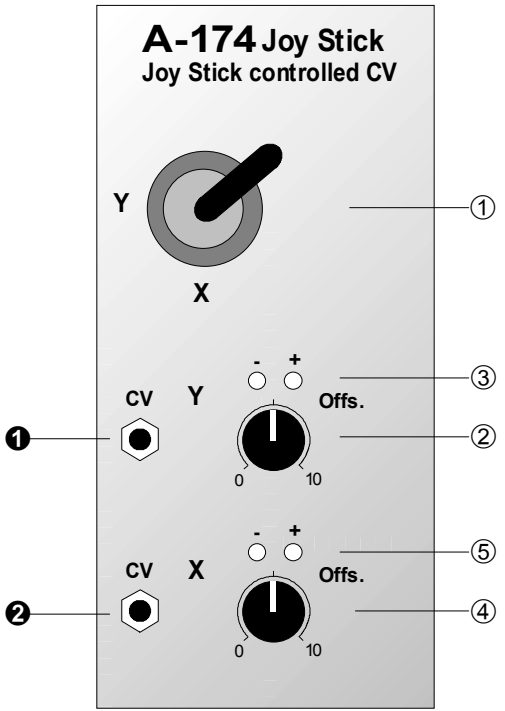

Controls:

① **X Y** : Joy Stick (cross potentiometer)

② **Offs.** : Offset control for Y control voltage

③ **LED's** : Display of Y control voltage

④ **Offs.** : Offset control for X control voltage

⑤ **LED's** : Display of X control voltage

In- / Outputs:

❶ **CV Y**: Control voltage output Y

❷ **CV X**: Control voltage output X

(**X** = controlled by horizontal movement
Y = controlled by vertical movement)

3. Controls

① X Y Joy Stick

With the Joy Stick ① the **control voltages** appearing at the CV outputs ❶ resp. ❷ are adjusted. The output voltage range is about 7 V, i.e. about -3.5 V ... +3.5 V with symmetrical offset adjustment (i.e. 0V in the neutral position).

The control voltage **CV X** is controlled by **horizontal**, **CV Y** by **vertical** movement of the joy stick lever. The following assignment applies:

X: -3.5 Y: +3.5	X: 0 Y: +3.5	X: +3.5 Y: +3.5
X: -3.5 Y: 0	X: 0 Y: 0	X: +3.5 Y: 0
X: -3.5 Y: -3.5	X: 0 Y: -3.5	X: +3.5 Y: -3.5

The actual voltages appearing at the CV outputs depend also on the settings of the offset controls ② resp. ④.



The joy stick used in the A-174 module is spring-loaded, i.e. the lever returns back to the neutral position as soon as it is released. If the spring is removed for one direction the joy stick is no longer spring-loaded for this direction. But as the spring is destroyed when removed this cannot be re-established ! The joy stick is available as spare part (about US$35.00).

② Offs. Y • ④ Offs. X

With the offset control ② resp. ⑤ the **zero** point (offset) is adjusted. If 0V CV output is required in the neutral position the offset control is adjusted until both LEDs ③ resp. ⑤ of the direction in question are off. For some applications a positive offset may be useful (e.g. for A-132 VCA control).

③ LEDs Y • ⑤ LEDs X

The LEDs ③ resp. ⑤ **display the present voltages** appearing at the outputs ❶ resp. ❷. For both positive (+) and negative (-) voltages a separate LED is available.

4. In- / Outputs

❶ CV Y

This socket outputs the **Y control voltage** controlled by vertical movement of the joy stick lever.

❷ CV X

This socket outputs the **X control voltage** controlled by horizontal movement of the joy stick lever.

5. User examples

Module A-174 generates 2 manually adjusted control voltages that can be used to control any parameter in the A-100 system that is voltage controlled. Thus there are manifold applications depending upon the modules available in the existing A100 system.

Here is a list of some typical examples:

- **Filter control**
  e.g. CV X : frequency, CV Y : resonance
- **Mixing of audio or CV signals**
  e.g. CV X: CV for VCA 1 controlling level 1, CV Y: CV for VCA 2 controlling level 2, both VCA outputs are mixed together in an A-138
- **Panning / Loudness**
  CV X : panorama position (CV for A-134),
  CV Y : overall loudness (CV for 2 final VCAs)

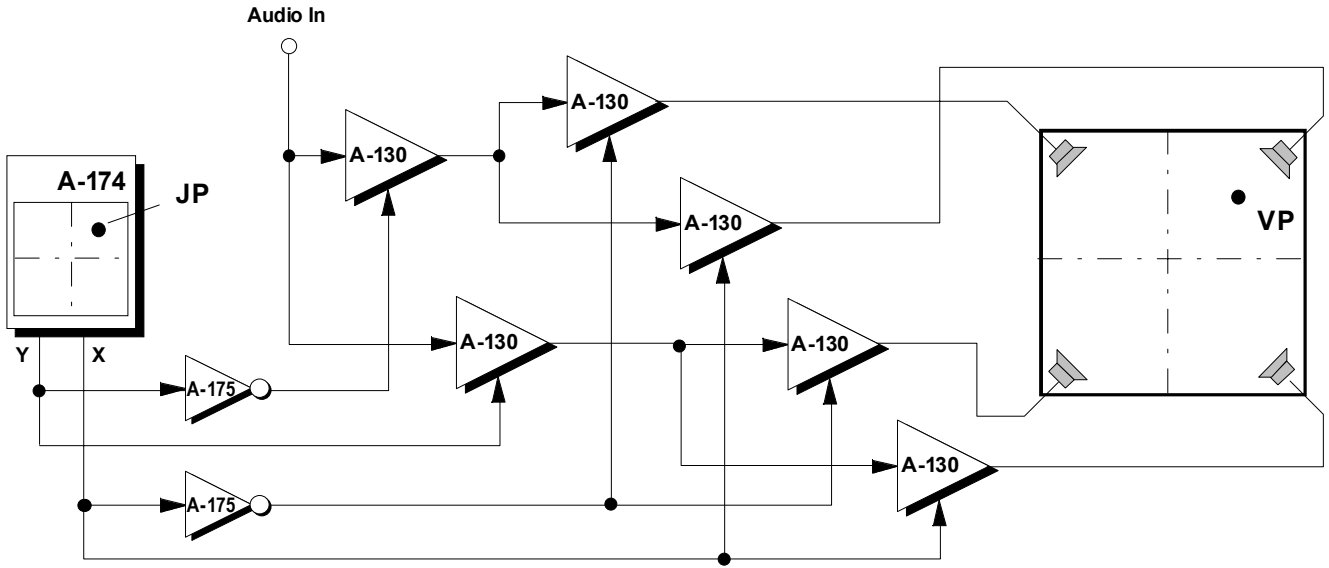

The patch in fig. 1 shows how a A-174 can be used to move the position of an audio signal in the quadrophonic hearing space. The mechanical position “JP” of the joy stick lever corresponds to the virtual position “VP” of the audio signal.

Fig. 1: Controlling the virtual position of an audio signals in the quadrophonic hearing space (each combination of one A-175 and two A-130 can be replaced by a A-134 VC Panning module).

6. Patch-Sheet

The following diagrams of the module can help you recall your own **Patches**. They're designed so that a complete 19" rack of modules will fit onto an A4 sheet of paper.

Photocopy this page, and cut out the pictures of this and your other modules. You can then stick them onto another piece of paper, and create a diagram of your own system.

Make multiple copies of your composite diagram, and use them for remembering good patches and set-ups.



- Draw in patchleads with colored pens.
- Draw or write control settings in the little white circles.

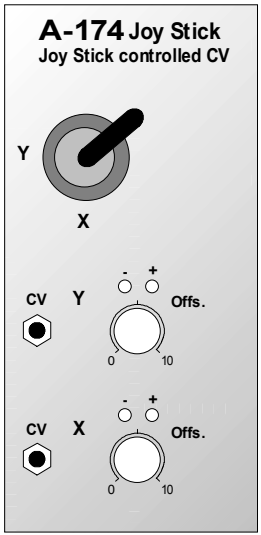

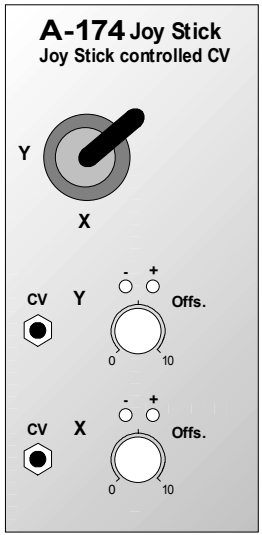

Remark:
The joy sticks are equipped with a M3 thread. In the factory a black plastic lever (about 4 cm in length) is srewed to this thread. You may unscrew this lever and replace it by any other lever equipped with a M3 thread (e.g. telescope antennas with M3 thread are available).

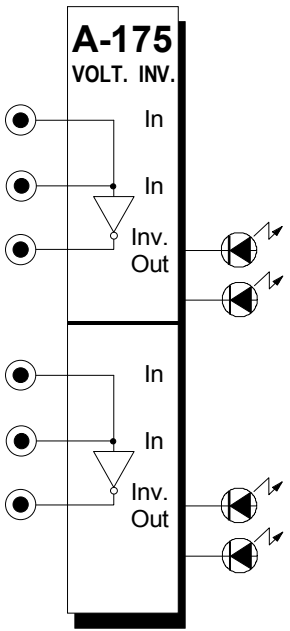

1. Introduction

Module **A-175 (Dual Voltage Inverter)** is exactly what it says it is: two identical inverters, which will take a voltage and output it in an inverted form - so that an input of +5 V will be output as -5 V, an input of -2 V will be output as +2 V, and so on.

Two **LEDs** give a visual indication of the (positive or negative) output signal.

2. Overview

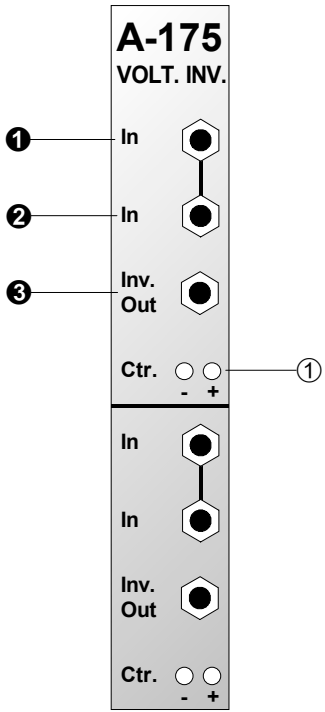

Indicators

① **LEDs** : Visual indicators of the state of the output voltage (positive or negative)

In- / Outputs

❶ **In** : Voltage input, linked to input ❷

❷ **In** : Voltage input, linked to input ❶

❸ **Inv. Out** : Inverted voltage output

3. Indicators

① LEDs

Visual indicators of the state of the output voltage (positive or negative) at socket ❸.

4. In- / Outputs

❶ In • ❷ In

Sockets ❶ and ❷ are the internally linked **inputs** for the A-175. This is where you patch in the signal you want to invert.



Since in practice you very often need the original signal as well as its inversion (see user examples), you can use the second socket as a mini-multiple.

❸ Inv. Out

The inverted voltage is output at socket ❸.

5. User examples

Panning

Fig. 1 shows a typical patch to create **Panning** - the shifting of a sound's position in the stereo picture.

The input signal is simultaneously sent to two **linear** VCAs, whose outputs are sent one to the left (Out_L) and one to the right (Out_R) stereo channel. Both VCAs are being modulated by the same slow LFO. One of the VCAs has the LFO voltage patched straight into it, but the other has an A-175 patched in line first, so receives the LFO voltage inverted.

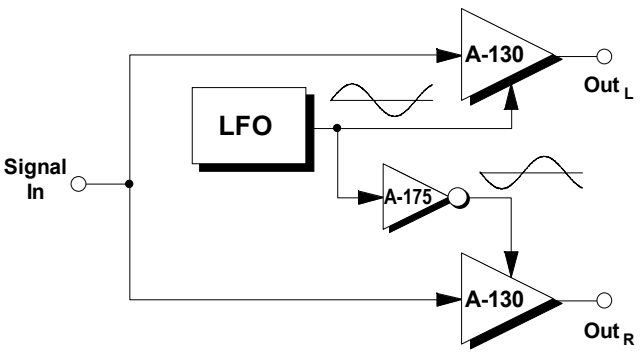

Fig. 1: Panning

The changing state of the LFO voltages results in corresponding changes in the perceived position of the sound in the stereo picture.

☞ It's important to set the **gain parameter** on both VCAs to **roughly halfway.**

Interesting types of panning can result if you use a different modulator (for instance, AM, FM, Random Voltage, S&H).

If you replace the two VCAs with two A-125 VCPs, the result is a sort of rotating stereo phasing.

Mirroring a scale or arpeggio

The patch in Fig. 2 shows a way of using two VCOs to create a mirror-image of a series of notes.

The pitch CV is patched directly to VCO 1, but goes through an A-175 and is inverted before it gets to VCO 2.

☞ The relative pitch of VCO 2 can be controlled with an attenuator.

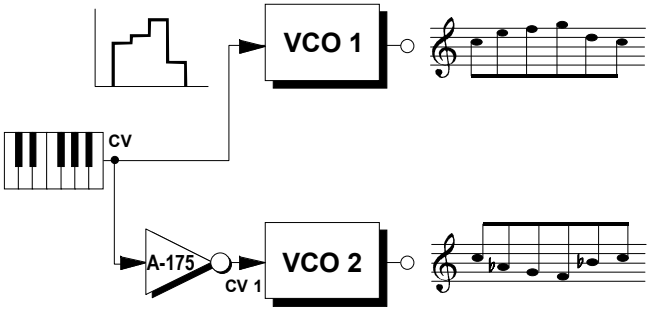

Fig. 2: Mirroring a series of notes

AM with control of timbre

The example in Fig. 3 shows amplitude modulation with timbre control.

The frequencies of both the carrier VCO (VCO 1) and the modulator VCO (VCO 2) are in the audio range. The pitch CV from the keyboard is patched via an A-175, and so is inverted before it controls the modulation amount (VCA 2). The result is that the sideband harmonic distortion is stronger, the lower down the keyboard you go (see also the user examples in the A-130/1 manual).

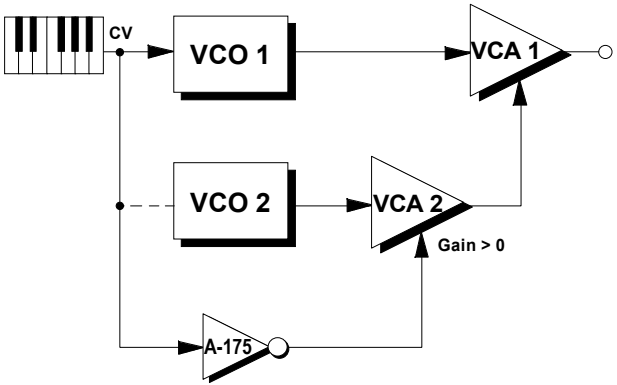

Fig. 3: AM with timbre control



As an alternative, a free-running VCO 2 can be used to supply the pitch CV.

You can expand this patch by adding an A-120 VCF after VCA 1, and controlling its cut-off frequency with the inverted pitch voltage. This has the effect of filtering out more of the sidebands in higher notes.

6. Patch-Sheet

The following diagrams of the module can help you recall your own **Patches**. They're designed so that a complete 19" rack of modules will fit onto an A4 sheet of paper.

Photocopy this page, and cut out the pictures of this and your other modules. You can then stick them onto another piece of paper, and create a diagram of your own system.

Make multiple copies of your composite diagram, and use them for remembering good patches and set-ups.



• Draw in patchleads with colored pens.

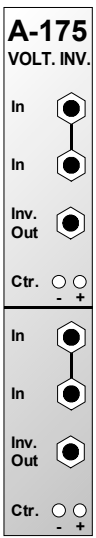

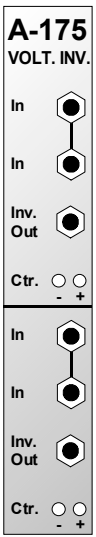

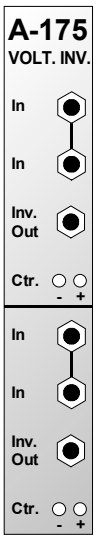



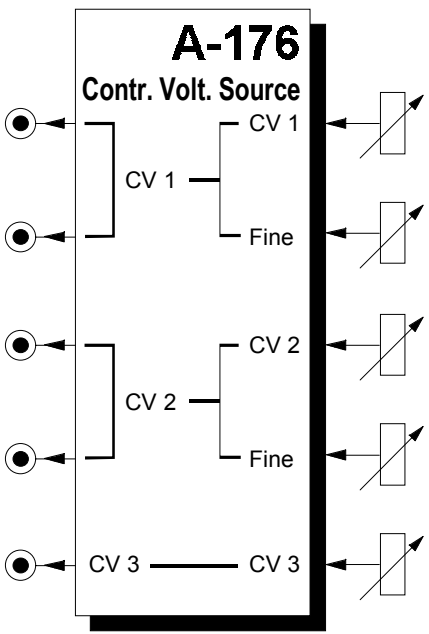

1. Introduction

Module **A-176** (**Control Voltage Source**) provides three **voltage sources**, to use wherever an extra CV is required.

The top two voltage sources (**CV 1** and **CV 2**) have controls for **coarse** and **fine** control of the voltage output; the third source (CV 3) just has the one control.

The range of the voltages output can be preset, either to **0 to +5 V** or to **-2.5 V to +2.5 V** depending on your likely requirements. There is a jumper on the circuit board for each of the three voltage sources.

A typical use for the module would be to provide fine as well as coarse tuning for an A-110 standard VCO, (which, unlike the A-111, only has one tune control), See chapter 5, user examples.

In general, this module will be useful whenever you need a manually controllable CV on a module which doesn't itself have a built-in control.

2. Overview

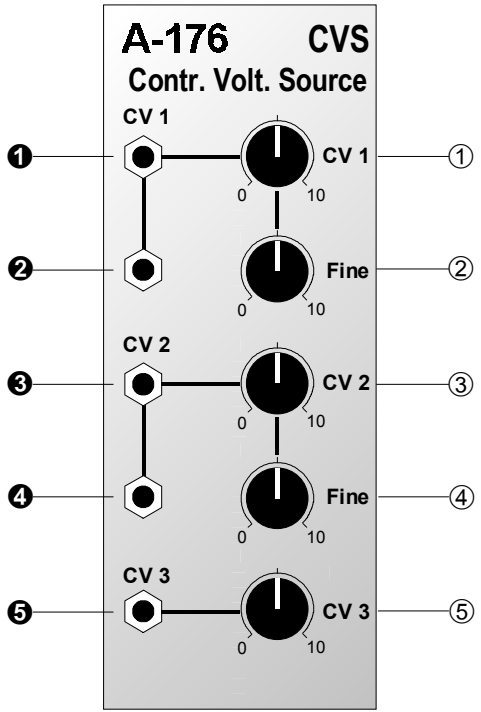

Controls:

① **CV 1** : Coarse control for the voltage at linked outputs ❶ and ❷

② **Fine** : Fine control for the voltage at linked outputs ❶ and ❷

③ **CV 2** : Coarse control for the voltage at linked outputs ❸ and ❹

④ **Fine** : Fine control for the voltage at linked outputs ❸ and ❹

⑤ **CV 3** : Control for the voltage at output ❺

Outputs:

❶, ❷ **CV 1** : Parallel outputs for CV source one

❸, ❹ **CV 2** : Parallel outputs for CV source two

❺ **CV 3** : Output for CV source three

3. Controls

① CV 1 • ③ CV 2

Controls ① and ③ provide **coarse adjustment** of the voltages at outputs ❶ and ❷, and ❸ and ❹ respectively.

The range of controls ① and ③ is approximately **5 V**.

② Fine • ④ Fine

Controls ② and ④ provide **precision adjustment** of control voltages CV 1 (at outputs ❶ and ❷) and CV 2 (at outputs ❸ and ❹) respectively.

The range of controls ② and ④ is approximately **0.1 V**.

⑤ CV 3

This knob sets the **control voltage CV 3**, at output ❺.

The range of this control is approximately **5 V**.

4. Outputs

❶ CV 1 • ❷ CV 1

These are the internally connected **parallel outputs** for the **first CV source**, whose level is set by controls ① and ②.

❸ CV 2 • ❹ CV 2

These are the internally connected **parallel outputs** for the **second CV source**, whose level is set by controls ③ and ④.

❺ CV 3

This is the **output** for the **third CV source**, whose level is set by control ⑤.

☞ The **voltage range for each of the sources** is individually adjustable with jumpers on the circuit board, either to **0 V - 5 V** or **symmetrical around zero** (-2.5 V to +2.5 V).

5. User examples

Expanding other modules' facilities

Module A-176 is always going to be useful when you need a manually controlled voltage which is not available on a particular module itself.

For instance, you can give the **A-132** low cost VCA manual control of its gain voltage, by patching in an A-176, and using the coarse and fine controls of one of its CV sources to set the gain (see Fig. 1).

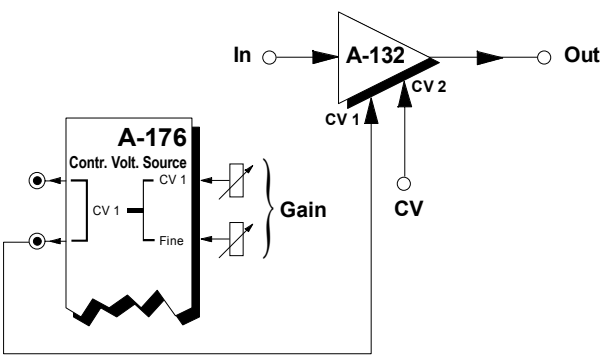

Fig. 1: Providing gain control for an A-132 VCA.

Improving tuning on the A-110 VCO

In contrast with the A-111 High End VCO, the A-110 standard VCO only has one control (Tune) for tuning. The range of this control has to be a compromise - it has a maximum range of only about an octave, but its fine tuning ability still isn't very precise.

With the A-176, it's possible to overcome these limitations, by patching the output from either the first or second voltage source into the CV2 input on the A-110 (see Fig. 2).

The VCO's frequency is then determined by a combination of the Range and Tune settings on the A-110, and the sum of the voltages going into the pitch CV input CV 1 and the external control voltage input CV 2.

Using the voltage source's coarse controller ① or ③ you then have far wider manual control of the range of the A-110 at the selected footage; and with the voltage source's fine controller ② or ④ you can fine tune the A-110 with great precision.

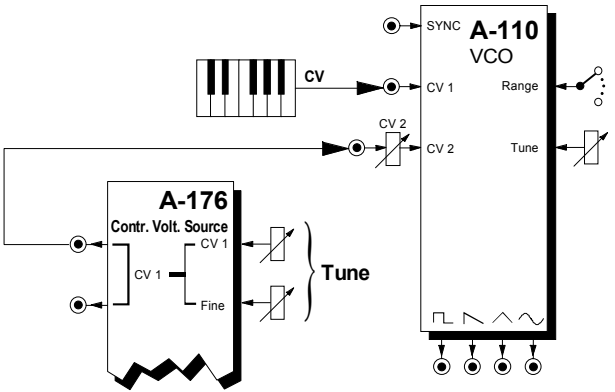

Fig. 2: Coarse and fine tuning an A-110 VCO.

Recalling pre-set CV values

Combined with an **A-150** (or A-151) voltage-controlled switch, the A-176 can be used as a source of pre-programmed voltages.

A control voltage **CV_S** is patched into the A-150, and, depending on its voltage, sends CV1 or CV2 from the A-176 to the A-150's output. This original control voltage CV_S can come from a **MIDI controller** via an **A-190** or **A-191** MIDI interface. That can give you, for example, velocity or aftertouch switching of filter modulation intensity (see Fig. 3).

Control voltage CV_S can also come from a **sequencer** (for instance the A-160 / A-161 or MAQ 16/3), to change volume levels each time a pattern repeats.

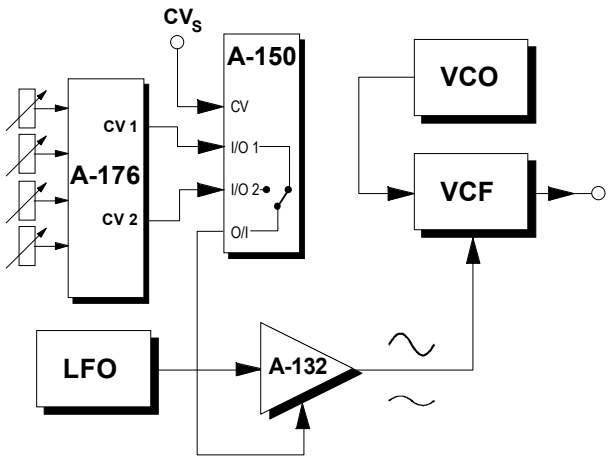

Fig. 3: Using a voltage-controlled switch to alternate between two pre-programmed modulation levels.

6. Patch-Sheet

The following diagrams of the module can help you recall your own **Patches**. They're designed so that a complete 19" rack of modules will fit onto an A4 sheet of paper.

Photocopy this page, and cut out the pictures of this and your other modules. You can then stick them onto another piece of paper, and create a diagram of your own system.

Make multiple copies of your composite diagram, and use them for remembering good patches and set-ups.

- Draw in patchleads with colored pens.
- Draw or write control settings in the little white circles.

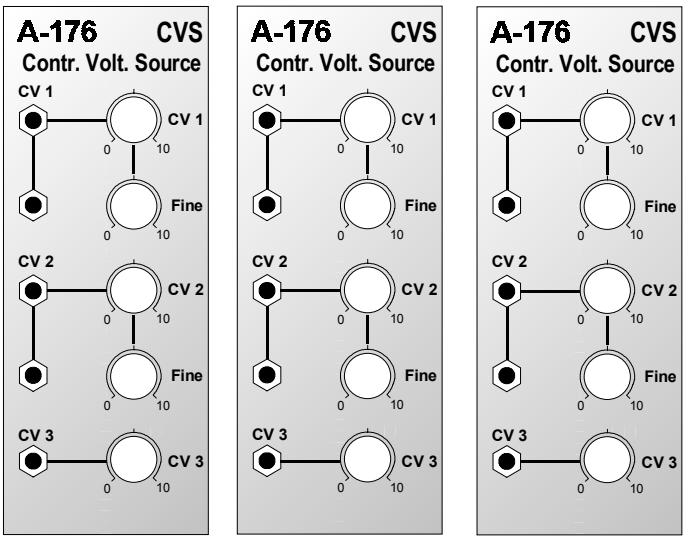

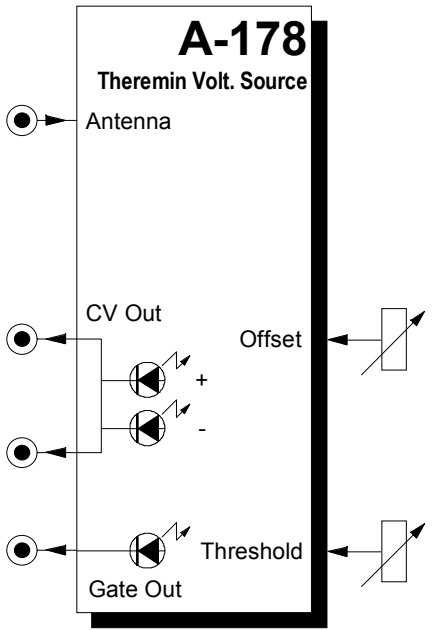

1. Introduction

Module **A-178** (**Theremin Voltage Source**) produces a **variable control voltage** which gets bigger the closer your hand gets to its antenna.

You can use this control voltage in any modulation or control process, and thus have access to an extra system of real-time control in the synthesis process.

You use the Offset control to set the **null point** (zero) of the control voltage output. Two LEDs give a visual indication of the voltages produced.

The module also produces a gate signal at the **gate output**: the signal goes "high" as soon as a voltage is sensed which is above the threshold set with the **Threshold control**. An LED gives a visual indication of the presence of a gate signal.

This gives you the ability to produce a gate signal simply by moving your hand.

2. Overview

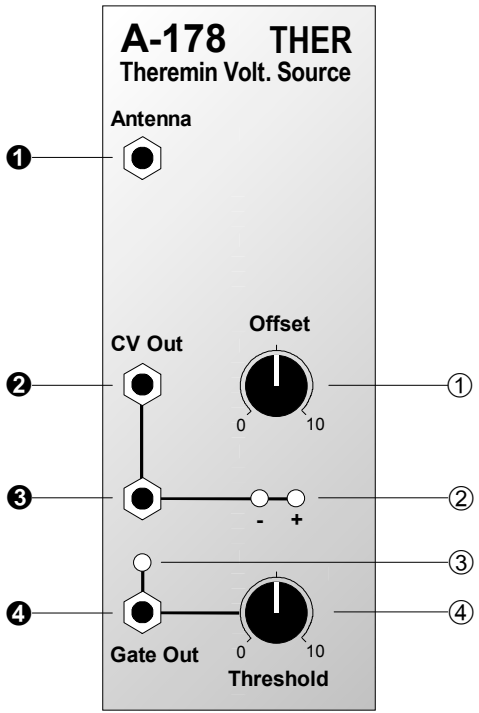

Controls:

① **Offset** : control for setting the null (zero) point

② **LEDs** : LEDs to give a visual indication of the voltage present at output ❷

③ **LED** : LED to give a visual indication of the presence of a gate signal at output ❹

④ **Threshold** : control for setting the gate threshold

In / Outputs:

❶ **Antenna** : antenna input

❷, ❸ **CV Out** : CV outputs (internally linked)

❹ **Gate Out** : gate output

3. Basic principles

The theremin acts as one plate of a capacitor and a human body as the other plate. Moving the hand towards and away from the antenna produces tiny changes in capacitance (so tiny that they're measured in the picoFarad range). The electronics within the theremin measure this change in the following way:-

The signal from an oscillator (whose frequency can be subtly adjusted with the offset control ①) is compared with the signal in another oscillating circuit, whose capacitor is made up of the antenna and an external object like the human body. If the capacitance is changed (by, e.g., moving your hand) the circuit's resonant frequency changes. This is measured, and converted into a control voltage.

Depending on the oscillator frequency, we may hit either the rising or the falling edge of the oscillating circuit's resonance - and thus produce respectively either rising or falling voltage as the hand gets closer to the antenna. The module is factory adjusted so that as the hand gets closer to the antenna, the voltage rises. This can be reversed if required, though.

4. Controls

① Offset

Control ① is used to adjust the **null point**, so that the control voltage at output ❷ is at 0 V, when the hand is some distance away from the antenna (more than about 30 cm).

☞ Because this module, like all theremins, is very sensitive to fluctuations in humidity, temperature changes, etc., it's necessary to check adjustment each time you use it.

In addition to the offset control on the front panel, there's also an internal trim inductor for **coarse adjustment** of this offset frequency - see appendix on p. 8.

Using this trim pot for coarse adjustment may be necessary if, for instance, you install another antenna, and it's then no longer possible to set the null point with the front panel offset control; or you want to use the **falling edge** of the circuit resonance, so that the control voltage generated gets lower as you approach the antenna.

② LEDs

The LEDs ② indicate the state of the voltage at CV outputs ❷ and ❸.

③ LED

LED ③ shows the presence of a gate signal at gate output ❹.

④ Threshold

Using control ④ you set a **threshold** voltage for the CV output, above which a **gate signal** will be produced at output ❹.

5. In / Outputs

❶ Antenna

Use socket ❶ to connect the **antenna**.

☞ If you use any other antenna than the telescopic one provided, and find that it's not longer possible to set the null point with the offset control ①, then it may be necessary to use the internal trim pot (see page 3, and appendix, page 8).

❷ CV Out • ❸ CV Out

CV outputs ❷ and ❸ (internally linked) put out the theremin's voltage.

❹ Gate Out

Socket ❹ puts out the gate signal, whenever the voltage created by the theremin is greater than the threshold set with control ④. This gate signal can be used as a noise-gate or as a source of manually-triggered gates for other modules (see user examples).

6. User examples

Theremin module A-178 provides a further source of control for real-time sound manipulation and creation (so see also the suggestions in the manual for the Foot Controller, module A-177).

The change in voltage produced by your hand getting closer to the antenna can be used for all sorts of control or modulation:

- VCO pitch control
- VCA gain
- VCF cut-off frequency
- VCF resonance (with the A-121, 122 or 123)
- VC-LFO frequency
- LFO modulation depth

Standard Theremin

Fig. 1 shows how to use two A-178 modules to create a **standard theremin.** One hand controls the **pitch** of the VCO, and one controls the **gain** of the VCA.

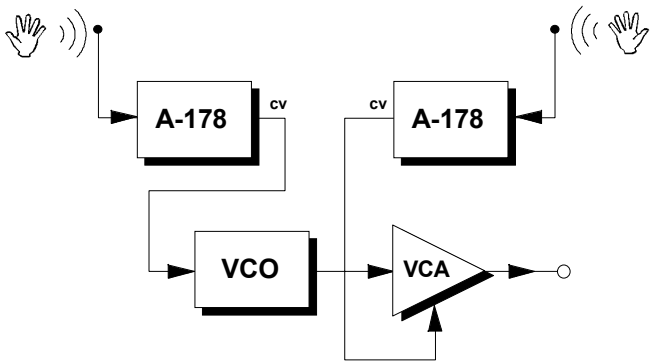

fig. 1: A standard theremin, using two A-178 modules

If you want to use two or more theremin modules, you need to think carefully about the best positioning for them in the rack relative to each other, so that each can be controlled by hand movements without affecting the other/s.

It's useful, with one or more theremin module, to place them high in your rack, so that there's less chance of patch cables hanging down and affecting performance (see fig. 2).

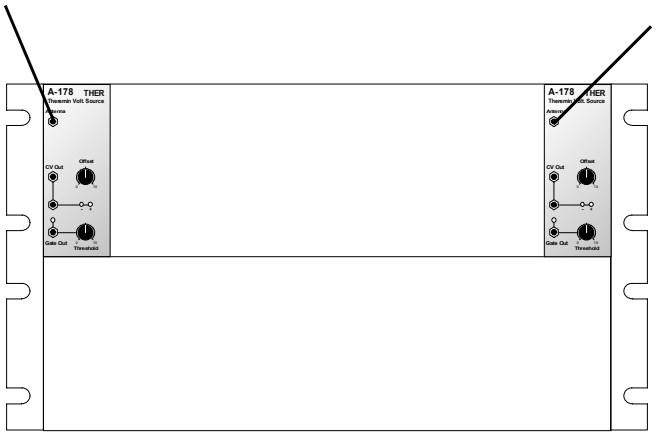

fig. 2: Recommended positioning of two A-178s

Using the gate function

The gate function in the A-178 gives you the facility to have remote switching of events in **real time**, simply by moving your hand towards the antenna.

The function can be used as a noise gate, using the gate signal to switch a VCA on and off, either directly or via an ADSR or slew limiter. Whenever the signal is underneath a certain voltage, the VCA simply shuts down.

In the patch in fig. 3, just a quick movement of one hand can control both the frequency of the VCO, and a rapid repeat of the envelope controlling the VCA, and thus produce tremolo.

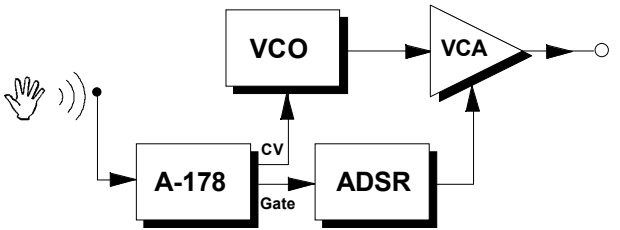

fig. 3: User example for the gate function

An alternative to the patch in fig. 3 would be to use the ADSR to control a filter as well.

Other possible uses: Start / Stop on a sequencer, "one-shots" (ADSR-triggered noises, like thunder), switching filter characteristics, etc. (see also the user examples in the A-177 Foot Controller manual).

7. Patch-Sheet

The following diagrams of the module can help you recall your own **Patches**. They're designed so that a complete 19" rack of modules will fit onto an A4 sheet of paper.

Photocopy this page, and cut out the pictures of this and your other modules. You can then stick them onto another piece of paper, and create a diagram of your own system.

Make multiple copies of your composite diagram, and use them for remembering good patches and set-ups.

- Draw in patchleads with colored pens.
- Draw or write control settings in the little white circles.

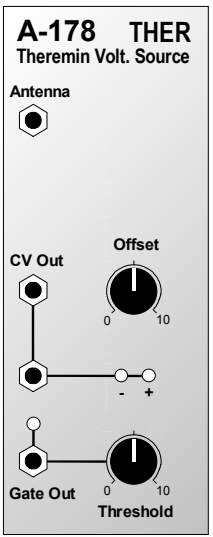

8. Appendix

On the board a **trimming inductor** resp. **trimming potentiometer** is available with which the offset can be adjusted internally. Use it if, for instance, you connect a different antenna, and find that the front-panel control ① can't adjust the offset sufficiently to reach the null point, or if you want to reverse the standard polarity of the theremin module, and change its response so that it works on the **falling edge of the internal resonanct hf circuit** (and thus produces a lower CV the closer your hand gets to the antenna).

Version 1:

The diagram on the right side shows the layout of the A-178's printed circuit board version 1. The trimming inductor is encircled.

Versions 2 and 3:

For the versions 2 and 3 the circuit has been modified and the inductor is replaced by a **trimming potentiometer**. For version 2 it is labelled "Frequency Offset"/ P5 and located behind the offset front panel control. For version 3 the potentiometer is labelled P3 and located between the antenna socket and the offset front panel control (close to the capacitor labelled "C1 150p").

The different pcb versions can be distinguished by the pcb printings:
V1: no version imprint
V2: imprint "Theremin Controller Version 2 / 1998"
V3: imprint "Theremin A-178 V3"

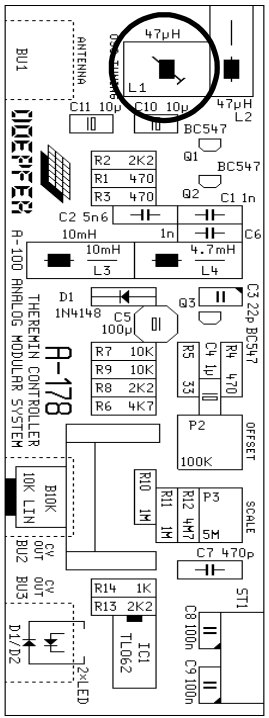

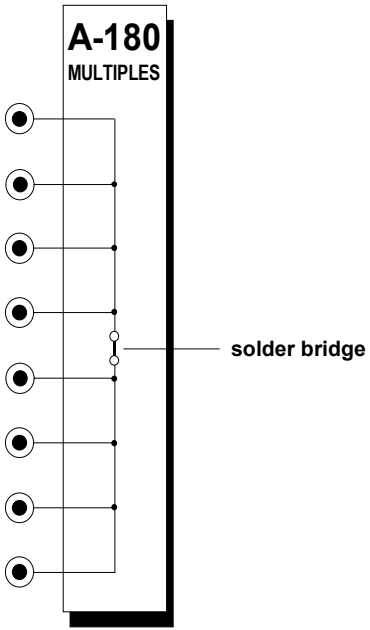

1. Introduction

Module **A-180 (MULTIPLES)** is a **multi-connector**.

It has eight inter-connected sockets, so that you can patch more inputs or outputs into any module.

The sockets can be **split into two groups** of four by disconnecting an internal solder bridge.

Modification from Dezember 2003: The module is shipped in the dual quad version (two groups with 4 connected sockets each, no solder bridge). To obtain a 8-fold multiple the solder bridge has to be installed. The modification was made as normally two quad multiples are more often needed that a 8-fold multiple.

2. Overview

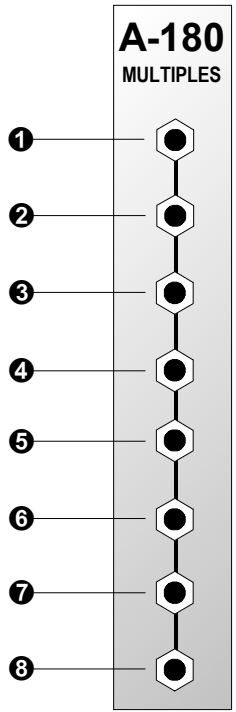

In / Outputs

❶ ... ❽: 8 interconnected sockets

☞ By removing the internal solder link between sockets ❹ and ❺ you can split the multiples into **two groups of four**:

Group 1: sockets ❶ to ❹

Group 2: sockets ❺ to ❽.

That way, you have two separate four-way distribution matrices.

☞ *From Dezember 2003 this version is the factory setting !*

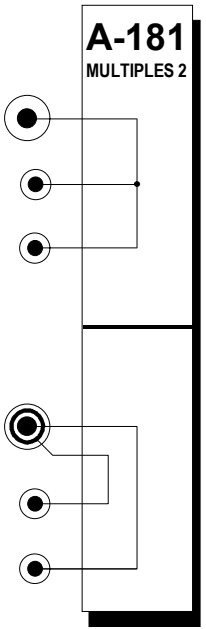

1. Introduction

Module **A-181** (**MULTIPLES 2**) is a double set of **multiple sockets**. Unlike module A-180, it takes quarter-inch as well as 3.5 mm plugs.

The **upper section** has **three inter-linked sockets**, including one **6.3 mm mono jack socket.** This makes it easy to connect the A-100 to the big scary world of quarter-inch jack connectors, without having to use a special cable.

Typical applications might be to send the audio out from the A-100 directly to a mixer or amplifier, or to patch audio signals or control voltages in to the A-100 from a source (sampler output, MIDI-CV interface, etc.) which has 6.3mm connectors.

The **lower section** comprises one **6.3 mm stereo jack socket** and two standard A-100 3.5 mm sockets (see fig. 1). A typical use might be to send a stereo audio output to a mixer channel which uses a stereo 6.3 mm connector.

2. Overview

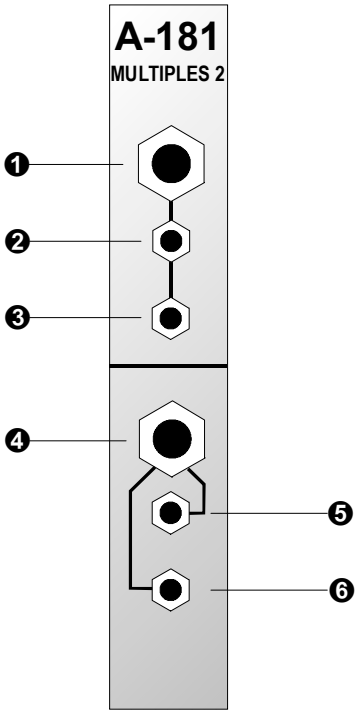

In / Outputs

❶, ❷, ❸ : three internally linked sockets, one of which (❶) is a 6.3 mm **mono jack socket**

❹ : socket for 6.3 mm **stereo jack**

❺ : socket internally linked to the **tip** of the plug inserted into socket ❹ (see fig. 1)

❻ : socket internally linked to the **ring** of the plug inserted into socket ❹ (see fig. 1)

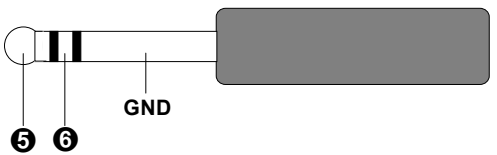

fig. 1: connection diagram for a plug patched into socket ❹

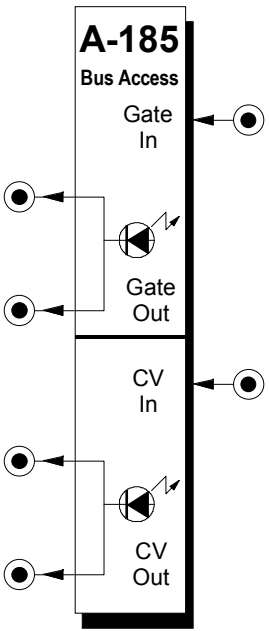

1. Introduction

Module **A-185** (**Bus Access**) enables the user to have **access** to the **internal system bus** of the System A-100. This is an active connection, with **booster amplification** (see fig. 1), to maintain correct levels for CV and gate signals, and to avoid the signal losses and consequent problems that a simple passive link-up might cause.
The gate and CV inputs on the A-185 are used to patch **external gate and/or CV signals** into the A-100 system bus; while the **internal system bus CV and gate signals** are available at the gate and CV outputs of the A-185. Two LEDs provide a visual indication of the signals.

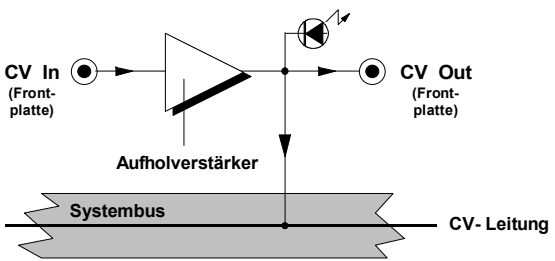

fig. 1: patching an external CV into the system bus

2. Overview

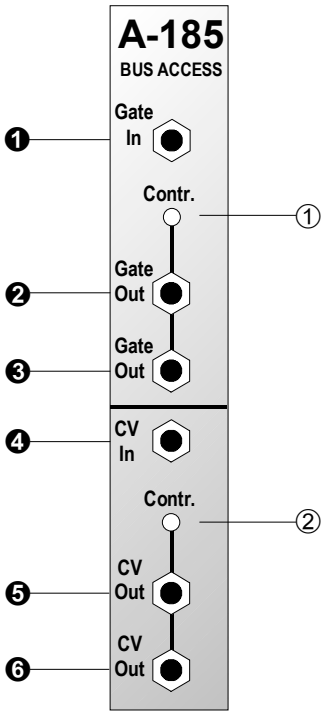

Controls:

① **Contr.** : system bus gate indicator LED

② **Contr.** : system bus CV indicator LED

In / Outputs:

❶ **Gate In** : input for external gate signal

❷, ❸ **Gate Out** :outputs (internally linked) for whatever gate signal is present on the internal system bus

❸ **CV In** : input for external CV signal

❹, ❺ **CV Out** : outputs (internally linked) for whatever CV signal is present on the internal system bus

3. Controls

① Contr.

LED indicator ① shows the state of the gate signal on the system bus.

② Contr.

LED indicator ② gives a visual indication of the CV present on the system bus.

4. In / Outputs

❶ Gate In

Use **gate input ❶** for patching in **external gate signals**.

❷ Gate Out • ❸ Gate Out

The two internally linked **gate outputs ❷** and **❸** provide access to any gate signal present in the internal system bus.

❹ CV In

Use **CV input ❹** for patching in **external CV signals**.

❺ CV Out • ❻ CV Out

The two internally linked CV outputs **❺** and **❻** provide access to any CV signal present in the internal system bus.

5. User examples

Creating a common system bus for an A-100 with more than one 6U rack system

If your System A-100 fits into just one 6U rack, and you want to connect up the upper and lower system busses so that their CV and gate signals are linked, you can usually just connect them internally with the optional **A-100BC** cable (see the A-100 main system manual, chapter 3, page 10).

But if you want to connect the CV and gate signals on **two or more 6U racks**, then module **A-185** comes into its own.

Fig. 2 (see next page) shows the basic connection plan.

⚠ **Important note concerning the A-190:**

If, as in fig.1, you connect up the signals from an A-190 MIDI interface to the system bus via an A-185, **you must disconnect the A-190's internal connection from the system bus** (see the A-190 manual, p. 4).

Compensation for signal losses

There are also times when an A-185 is useful even with just one 6U rack. Particularly if you're running **more than two VCOs from the same common system bus**, the internal CV voltage can drop sufficiently for the keyboard scaling to go slightly out, causing high notes to be annoyingly out of tune. The booster amplifier if the A-185 will avoid any such problems.

Losses of the gate voltage normally cause no problems as low threshold values (~2...3 V) are required to trigger gate inputs (e.g. ADSR A-140). However for pitch control voltages even a few millivolts will cause an audible detuning.

When feeding external pitch CVs to the A-100 (e.g. from an external MIDI-to-CV interface or from one our sequencers MAQ16/3, Schaltwerk or Regelwerk) the usage of an A-185 is recommended - especially if more than one VCO is driven by the external CV.

Even for voltage losses of other pitch processing modules (e.g. the slew limiters A-170 or A-171) the A-185 may help in case of detuning problems.

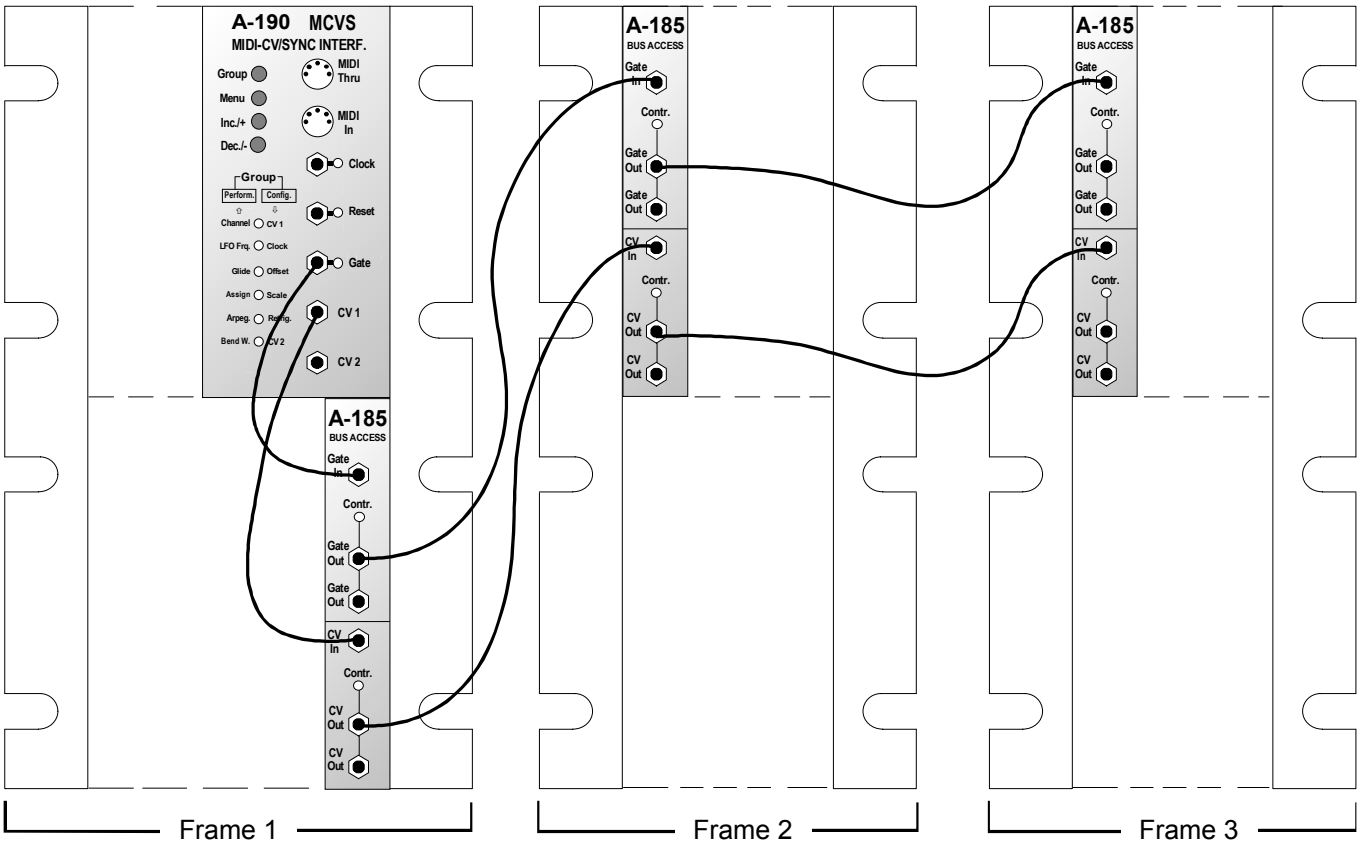

fig. 2: Connecting the system busses on a multiple-rack A-100 system

6. Appendix

Module A-185 has two internal jumpers on its circuit board, which are factory-set to send **external CV and gate signals** to the system bus (see fig. 1).

By re-aligning these jumpers, you can convert the A-185 so that it doesn't take gate and CV signals from the input sockets, but simply **'reads'** them from the system bus, and sends them out to the front panel CV and gate output sockets. In this "read-only" mode, the input sockets are disconnected from the system bus (see fig. 3).

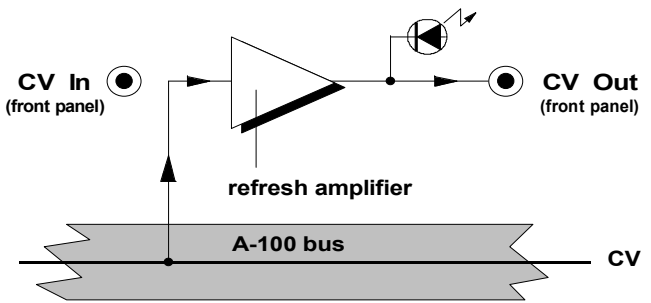

fig. 3: example of "read-only" mode with CVs

In practice, there aren't admittedly going to be a lot of occasions when this is required, so we won't go into any more detail here.

☞ As delivered from the factory, the jumpers are set so that the module sends CV and gate signals to the system bus.

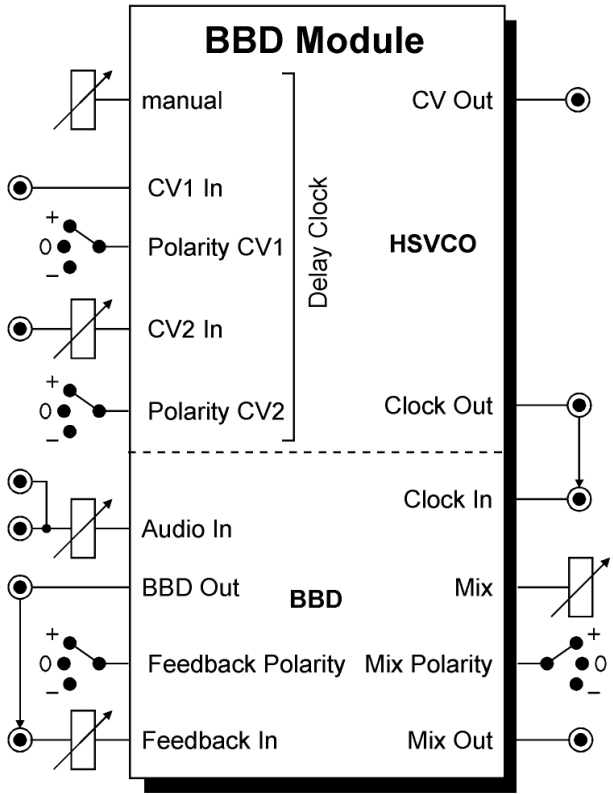

Fig. 1: A-188-1 Controls and In/Outputs

1. Introduction

Module A-188-1 is a so-called Bucket Brigade Device module (abbr. BBD). BBDs have been used to delay audio signals before digital delays dethroned the BBD based effect units. But BBDs have some very unique advantages (or disadvantages dependent on the point of view) over the digital counterpart which result from the special properties of the BBDs. BBD circuits can be treated as a chain of Sample&Hold units (S&H) which pass on their voltages to the next S&H in the chain at each clock pulse. A more detailed explanation – including the different types of BBDs – can be found in the following chapter.

In any case the sounds generated by module A-188-1 are very special. Typical applications are: Flanger, Chorus, Analog Delay or Karplus/Strong synthesis. But as the A-188-1 has a lot of very unique features (voltage controlled clock rate / delay time with extreme range, polarity switches for the CV inputs, feedback and BBD out/mix, clock and CV output of the high speed VCO, BBD clock input, feedback insert, feedback up to self-oscillation) a lot of unusual applications can be realized with the module (e.g. delay controlled by ADSR, random, envelope follower or sequencer with positive or negative effect). The A-188-1 also has no built-in anti-aliasing filter in order not to limit the possibilities of the module. For this the CV out is intended.

2. Basic Principles

As mentioned in the introduction a BBD circuit can be regarded as a chain of Sample&Hold units (S&H) which pass on their voltages to the next S&H in the chain at each clock pulse. From this also the name Bucket Brigade Device is derived as each stage of the BBD can be treated as a bucket. At each clock pulse the content of each bucket is forwarded to the next bucket in the chain and the current bucket is filled with the contents of the preceeding bucket.

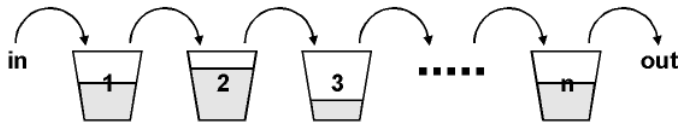

Fig.2: Bucket Brigade

Remark: In reality two "buckets" are required for each stage as the content of a bucket has to be stored temporarily in a "slave bucket" before it can be filled with the contents of the preceeding bucket, in contrast to a "real" bucket brigade not the buckets are passed on but only the contents.
In the BBD the water is replaced by analog voltages which again represent audio signals. The first bucket (1) is the audio input, the last bucket (n) is the output of the BBD. As in reality there are losses while the water (resp. voltage) is passed on, because some drops of water go wrong and at the end of the chain not the same amount of water (resp. not exactly the same voltage) appears. In a BBD the buckets are replaced by capacitors and analog switches. As the capacitors of a BBD are very small (some pF only) even the time required to pass on the input to the output is crucial as the capacitors loose their charges if it takes too long. This is why a minimum clock frequency is specified for each BBC circuit. Below this frequency the flawless operation of a BBD is not guaranteed. In the A-188-1 intentionally frequencies can be used that go below this value to obtain special "dirty" and "crunchy" effects.
BBD circuits are available (or rather have been available) with different number of stages. Usual numbers are 128, 256, 512, 1024, 2048 or 4096 stages. Currently (as of spring 2006) only devices with 1024 and 2048 are still in production. Other BBDs are obsolete, hard to find and very expensive. Therefore only the versions of the A-188-1 with 1024 and 2048 stages are standard products. All other versions of the A-188-1 are available only while stocks of the corresponding BBD circuits last.
The number of stages defines the delay time that corresponds to a certain clock frequency. The higher the number of stages, the longer is the delay. The higher the clock frequency, the shorter is the delay.

Example: At 100kHz clock frequency the delay time is 10.24 ms for a BBD with 1024 stages and 20.48 ms for a BBD with 2048 stages.

The following table shows the relation between clock frequency, delay time and number of stages for some typical BBD circuits.

Relation between clock frequency [kHz] and delay time [ms]

		BBD circuit number of stages					
clock frequency (clock input socket)	BBD clock frequency (= 1/2 clock input)	MN3006 MN3206	MN3009 MN3209	MN3004 (*) MN3204	MN3007 (*) MN/BL3207	MN3008 MN/BL3208	MN3005 MN3205
[kHz]	[kHz]	128	256	512	**1024**	**2048**	4096
1	*0,5*	*128,00*	*256,00*	*512,00*	***1024,00***	***2048,00***	*4096,00*
2	*1*	*64,00*	*128,00*	*256,00*	***512,00***	***1024,00***	*2048,00*
5	*2,5*	*25,60*	*51,20*	*102,40*	***204,80***	***409,60***	*819,20*
10	*5*	*12,80*	*25,60*	*51,20*	***102,40***	***204,80***	*409,60*
20	10	6,40	12,80	25,60	**51,20**	**102,40**	204,80
50	25	2,56	5,12	10,24	**20,48**	**40,96**	81,92
100	50	1,28	2,56	5,12	**10,24**	**20,48**	40,96
200	100	0,64	1,28	2,56	**5,12**	**10,24**	20,48
300	150	0,43	0,85	1,71 (*)	**3,41 (*)**	***6,83***	*13,65*
400	200	0,32	0,64	1,28 (*)	**2,56 (*)**	***5,12***	*10,24*
500	*250*	*0,26*	*0,51*	*1,02*	***2,05***	***4,10***	*8,19*

(*) The max. clock frequency is 100 kHz only for MN3004 and MN3007 (in contrast to 200kHz for MN3204 and MN3207)

Remarks:

The standard versions of the A-188-1 with 1024 and 2048 stages are marked with **bold** characters.

The *grey italic* characters indicate parameters out of the data sheet specifications (e.g. clock frequencies below 10kHz for all BBD devices, and clock frequencies beyond 100kHz or 200kHz for certain BBD devices). But parameters out of spec may be available with the A-188-1. As the BBD devices cannot be damaged if they are operated with frequencies out of spec we decided to allow such frequencies with the A-188-1 to obtain special audio effects – especially for clock frequencies below 10kHz. But the regular behaviour is no longer guaranteed (especially increasing voltage losses at lower frequencies). As the clock frequency falls below ~ 20 khz the clock signal itself will become audible. This clock noise can be used as unusual audio source or it can be filtered out with an external low pass filter.

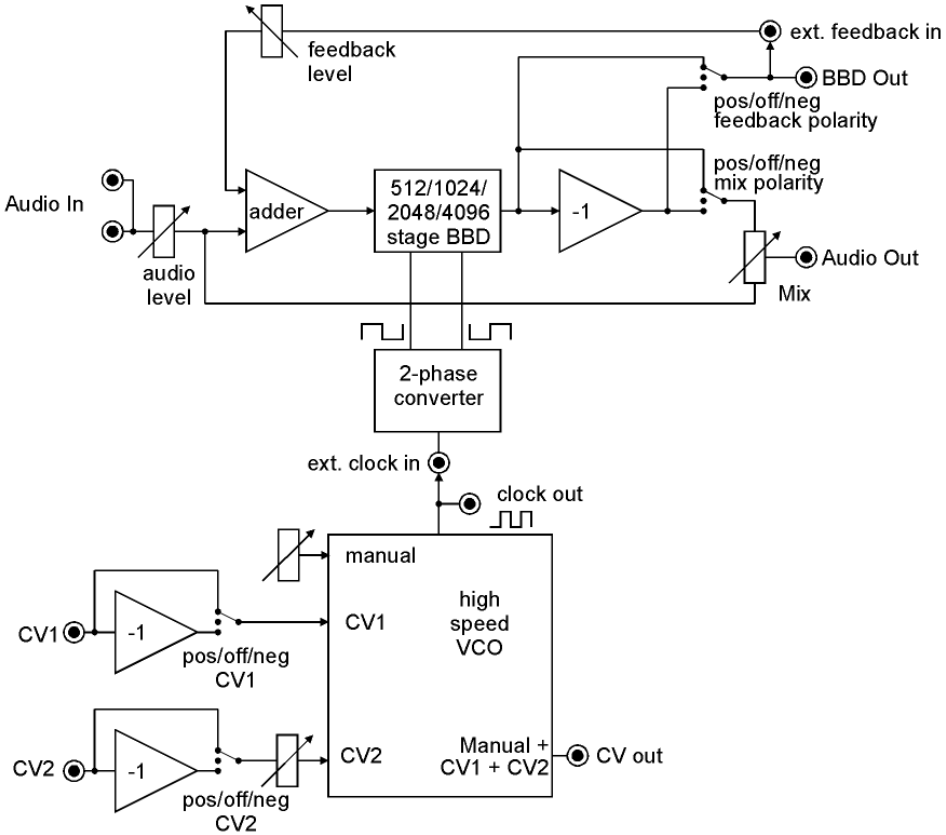

Fig. 3: A-188-1 module scheme

Fig. 3 shows the internal details of the module A-188-1: the upper part is the actual BBD section, the lower part the high speed VCO (HSVCO).

The HSVCO generates the clock signal that is required to drive the BBD. It has available a manual control and two CV inputs (CV1 without attenuator, CV2 with attenuator). For both CV inputs three-position polarity switches (negative / off / positive) are available. The position of these switches defines if a positive going CV has positive, none or negative effect on the clock frequency. CV1 has a sensitivity of approximately 1V/octave. The HSVCO has a CV out available that corresponds to the sum of all CVs (manual, CV1 and CV2). It's main purpose is to control the CV input of one or two external low pass filters that can be used as anti-aliasing filter and clock filter. If desired one low pass filter can be used behind the audio output to suppress the clock noise when the clock frequency falls below ~20 khz. Another filter can be used at the audio input to reduce the max. frequency of the incoming audio signal, consequently reducing aliasing artefacts. As the CV output reflects the clock frequency (affected by the manual control, CV1 and CV2) the external filters automatically follow the clock frequency of the BBD module. The higher the slope of the external filter (e.g. 12/24/48 dB/octave) the better is the clock suppression. The HSVCO features a clock output that can be used e.g. to synchronize two A-188-1 (i.e. both A-188-1 use the same clock source) or as high speed clock for other applications (e.g. graphic VCO, switched capacitor filter).

The clock output of the HSVCO is normalled to the clock input of the BBD section. The clock input makes it possible to control the BBD by an external clock source (e.g. another A-188-1 or any other clock signal in the required frequency range). For all clock signals from and to the A-188-1 only short patch cables should be used, as long cables function as low pass filters for signals above 20kHz.

A two-phase converter generates the two opposite clock signals that are required to drive the BBD circuits.

The audio input of the BBD module is equipped with an attenuator that enables to reduce the input level to avoid distortion. The audio input signal behind the attenuator is mixed with the feedback signal (details below) and fed to the audio input of the BBD circuit. The audio output of the BBD is processed by an inverter to have both the normal and the inverted BBD output available. The reason for this feature is that the polarity is crucial for both the output mixing (BBD + original) and the feedback behaviour of the module. The normal output of the BBD and the inverted output are fed to the terminals of two three-position polarity switches (negative / off / positive) for mixing polarity and feedback polarity.

The output mixer is used to mix the original signal with the normal or inverted BBD signal. The position of the mix polarity switch defines if the normal, none or the inverted BBD output is mixed with the original audio signal.

The following sketch shows the effect of normal/inverted mixing by means of a simple sawtooth signal as audio input.

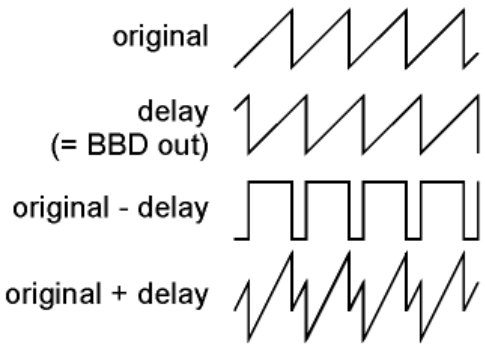

Fig. 4: positive/negative mixing of original and BBD signal

The center terminal of the feedback polarity switch is connected to the BBD output socket. Pay attention that the polarity of this output is affected by the position of the feedback polarity switch (especially there is no signal at the output socket if the switch is in the center position) ! The feedback input is normalled to the output socket. The combination of these two sockets allows to process the feedback loop with external modules (e.g. a VCA or a VC polarizer for voltage controlled feedback, or other modules like filter, phaser, frequency shifter, waveshaper, wave multiplier, ring modulator or another BBD module for special voltage controlled feedback effects)

The polarity of the feedback signal leads to clearly audible different sounds as different frequencies are emphasized or attenuated for positive or negative feedback.
The feedback can be increased up to self-oscillation. In contrast to other feedbacks (e.g. filters, phasers) the result in the self-oscillation state depends upon the "audio history" (i.e. the contents of the BBD when the self-oscillation is triggered). The reason is that there is not only one possible stable self-resonant state for the BBD. Any cyclic waveform "stored" in the BBD is able to resonate provided that the feedback maintains the waveform. One can try this out e.g. with different audio signals (e.g. digital noise and VCO sawtooth) as audio input before self-oscillation is triggered (e.g. by switching the feedback polarity switch from center position to positive or negative position).

Different BBD circuits (128/256/512 ... 4096 stages) influence a lot of sound parameters. Of course the delay time range and consequently the basic sound, but even the feedback behaviour (both the self-oscillation and the "smoothness" of the feedback), the distortion behaviour and the output level. It is hard to say which is the "best" solution. It depends upon the desired sound "bending". For typical analog delay sound BBDs with more stages are the better solution. But for "oppressive" flanging sounds caused by short delays or for Karplus-Strong synthesis shorter BBDs are recommended.

3. Overview

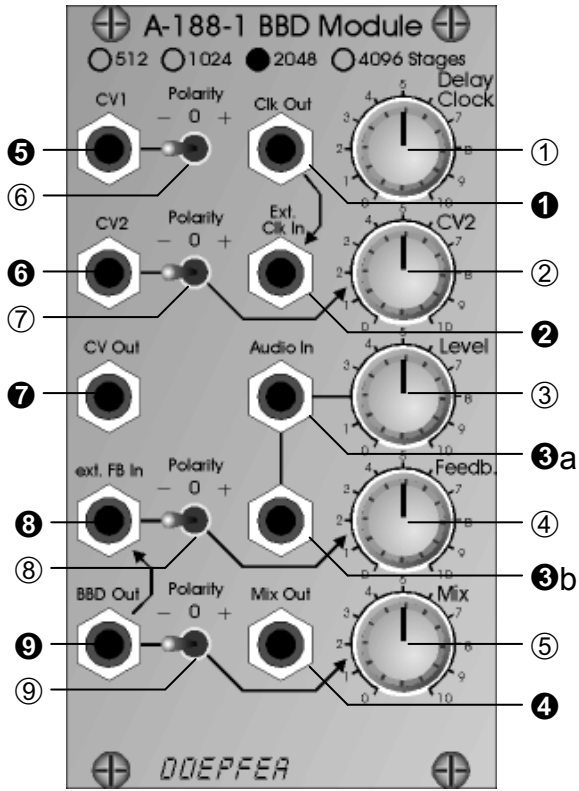

Fig.5: A-188-1 front panel

Controls:

①	Delay Clock :	manual delay control
②	CV2:	attenuator for CV2
③	Level:	audio input attenuator
④	Feedback:	feedback level control
⑤	Mix:	mix control (original/BBD)
⑥	Polarity:	CV1 polarity
⑦	Polarity:	CV2 polarity
⑧	Polarity:	feedback/BBD Out polarity
⑨	Polarity:	mix polarity

In- / Outputs:

❶	Clk Out:	clock output HSVCO
❷	Ext. Clk In:	BBD clock input (normalled to Clock Out ❶)
❸a	Audio In:	audio input (connected to ❸b)
❸b	Audio In:	audio input (connected to ❸a)
❹	Mix Out:	mixed output
❺	CV1:	CV1 input HSVCO
❻	CV2:	CV2 input HSVCO
❼	CV Out:	CV output HSVCO
❽	Ext.FB In:	external feedback input (normalled to BBD Out ❾)
❾	BBD Out:	BBD output (affected by polarity switch ⑧)

Attention: the front panel markings are wrong concerning the BBD Output and the feedback polarity switch. Please refer to the scheme on page 4.

4. Controls and In- / Outputs

4.1. High Speed VCO Section

① Delay Clock : manual delay control
❺ CV1: CV1 input HSVCO
⑥ Polarity: CV1 polarity
❻ CV2: CV2 input HSVCO
⑦ Polarity: CV2 polarity
② CV: attenuator for CV2

This group of elements is responsible for the clock frequency generated by the high speed VCO (HSVCO). knob ① *Delay Clock* is used to adjust the clock manually. Two CV inputs (❺ CV1, ❻ CV2) are available to control the clock by external control voltages (e.g. LFO, envelope follower, random, ADSR, keyboard CV, sequencer, theremin, ribbon controller, foot controller, Midi-to-CV, shepard generator ...). The sensitivity of CV1 is approximately +/– 1V/oct according to the position of the CV1 polarity switch ⑥. The diagram on the right side shows the connection between CV1 and clock frequency. The straight line represents the perfect 1V/oct graph. The slightly bended curve is the real behaviour of the HSVCO. If an absolutely "perfect" 1V/oct control is required an external precision HSVCO or a VCO with PLL has to be used.

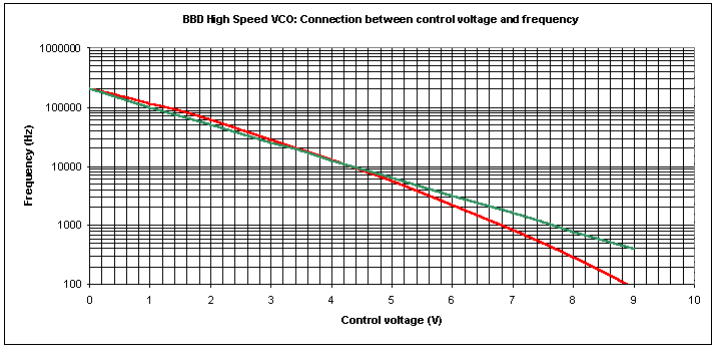

Fig 6: relation between CV1 and Clock Frequency

Both CV inputs are equipped with polarity switches (⑥, ⑦). According to the position of these switches the effect of the corresponding CV is positive (i.e. increasing CV increases the clock frequency), off, or negative (i.e. increasing CV decreases the clock frequency).

❶ Clk Out: clock output HSVCO

This is the clock output of the HSVCO. It is internally connected to the clock input of the BBD section. The waveform is rectangle with about ± 3V level. The rectangle slopes flatten with increasing frequency and the waveform turns more and more into triangle. Even the load on the output has influence to the waveform and level.

Consequently for all clock patches from and to the A-188-1 only short patch cables (~ 30 cm) should be used as long cables function as low pass filters for signals above 20kHz. The max. frequency at this output depends upon the BBD used in the module and is related to the max. clock frequency of the BBD in question (pls. refer to the table on page 3). It is about 250 kHz for BBDs with 2048 and 4096 stages and about 450kHz for BBDs with 1024 stages and less (i.e. a bit more than the max. clock frequency of the specs in the data sheet). If the BBD circuit is changed the max. frequency has to be re-adjusted with a trimming potentiometer on the pc board of the module (frequency offset). For details please refer to the appendix of this manual.

❼ CV Out: CV output HSVCO

This CV output indicates the clock frequency at output ❶ and is nothing but the sum of all CV inputs (manual, CV1 and CV2). The main purpose of this output is to control the CV input of one or two external low pass filters that can be used as anti-aliasing filter and clock filter. If desired one low pass filter can be used behind the audio output to suppress the clock noise when the clock frequency falls below ~20 khz. Another filter can be used at the audio input to reduce the max. frequency of the incoming audio signal, consequently reducing aliasing artefacts. As the CV output reflects the clock frequency (affected by the manual control, CV1 and CV2) the external filters automatically follow the clock frequency of the BBD module. The higher the slope of the external filter (e.g. 12/24/48 dB/octave) the better is the clock suppression. But the CV output can be used for other applications as well, e.g. controlling parameters of the feedback loop like feedback amount/polarity (CV of a VCA or VC polarizer used in the feedback loop), filter frequency (CV of a VCF used in the feedback loop), phase shift (CV of a VC phaser used in the feedback loop).

4.2. BBD Section

❷ Ext. Clk In: BBD clock input

This is the clock input of the BBD section and is internally connected to the clock output ❶ of the HSVCO section (i.e. it is normalled to the Clock Out socket ❶). If an external clock source is used the clock output of this source is patched to socket ❷. In this case the internal connection to the HSVCO is interrupted. The suitable clock frequencies depend upon the BBD used in the module (pls. refer to the table on page 3). The required level for the clock signal is 0/+5V (levels up to +12V cause no problems). This socket can be used e.g. to synchronize two A-188-1 modules (i.e. using one HSVCO for both modules).

❸a/b Audio In: audio input
③ Level: audio input attenuator

Sockets ❸a and ❸b are the audio input with the assigned attenuator ③. The two sockets are internally connected (miniature multiple). The second socket can be used to forward the audio input signal to other modules (e.g. to a VCA or VC polarizer or VC mixer for voltage controlled mixing functions). Feed the audio signal that has to be processed with the BBD effect into socket ❸a or ❸b. Adjust the *Level* control ③ so that the output signal does not distort - unless you want to obtain distortion. For normal A-100 levels (e.g. VCO A-110) distortion appears at about three o'clock position of control ③ but the distortion behaviour depends also upon the BBD circuit used in the module.

❾ BBD Out: BBD output

Socket ❾ is the "raw" BBD output (i.e. not mixed, not filtered). Pay attention that it is affected by polarity switch ⑧).

<u>Remark:</u> The front panel markings of the first two productions series are wrong concerning the BBD Output and the feedback polarity switch. Please refer to the scheme on page 4.

The BBD output can be used e.g. for voltage controlled mixing functions (i.e. if the original signal and the BBD signal are mixed externally with VCAs or VC polarizers or a VC mixer).

❹ Mix Out: mixed output
⑤ Mix: mix control (original/BBD)
⑨ Polarity: mix polarity

This group of elements is responsible for the mixed output appearing at socket ❹ *Mix Out*. In the left/ccw position of knob ⑤ *Mix* the original signal appears at socket ❹. In the right/cw position of knob ⑤ the pure BBD signal appears at socket ❹. In the intermediate positions of knob ⑤ a mix of these two signals appear at the output socket. For a standard flanger effect e.g. the center position is used.

The position of the polarity switch ⑨ defines if the normal or the inverted BBD signal is mixed to the original signal (please refer to page 6 concerning this function). Especially for short delay times the position of this switch leads to clearly audible different sounds. In the middle position of the switch the BBD share of the mixed signal is off and only the original signal is heard. Consequently the switch can be used to turn on/off the BBD effect at the mix output ❹.

❽ Ext.FB In: external feedback input
④ Feedback: feedback level control
⑧ Polarity: feedback/BBD Out polarity

This group of elements is responsible for the feedback functions of the module. Socket ❽ *Ext.FB In* is the input of the feedback loop and is normalled to socket ❾ *BBD Out*. If an external module is used to control the feedback loop (e.g. a VCA or VC polarizer) the module has to be inserted between socket ❾ *BBD Out* and socket ❽ *Ext.FB In*. The polarity switch ⑧ controls the polarity of the signal appearing at the socket ❾ *BBD Out* and consequently the polarity of the feedback signal. In the center position of switch ⑧ the signal at socket ❾ *BBD Out* is off and no feedback is active. Consequently the switch can be used to turn on/off the feedback effect. The polarity of the feedback signal leads to clearly audible different sounds at short delay times. For longer delay times ("analog delay" application) the sound differences are much smaller (for details please refer to page 6).

Knob ④ *Feedback* adjusts the feedback level. In the left/ccw position of the knob no feedback (or resonance/emphasis) is added. As the knob is turned right/clockwise feedback occurs. In the fully right/cw position the module goes into self-oscillation. As already mentioned in chapter 2 the result in the self-oscillation state depends upon the "audio history" (for details please refer to page 6). Both the self-oscillation behaviour and the "smoothness" of the feedback also depend upon the BBD circuit used in the module (128/256 ... 4096 stages).

5. User Examples

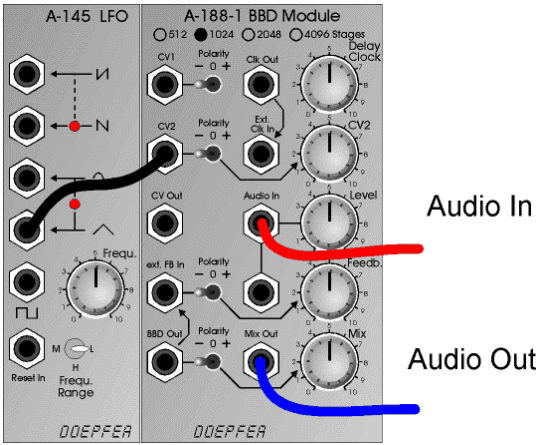

Standard Flanger Patch

Suitable control voltage sources are LFO (A-145 as shown in the example, A-146, A-147, A-143-3), random voltage (A-118, A-149-1), envelope (A-140, A-141, A-142, A-143-1, A-143-2), S&H (A-148, A-152), sequencer (A-155), theremin (A-178), ribbon controller (A-198).

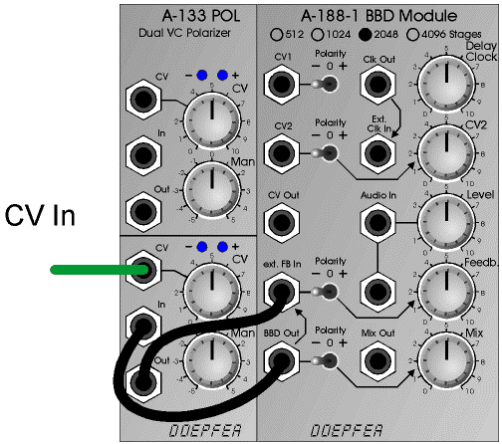

Voltage Controlled Feedback

Feedback is processed by an external voltage controlled polarizer (A-133) to obtain voltage controlled feedback. Instead of the polarizer even a VCA can be used. But with a VCA only positive or negative feedback is possible.

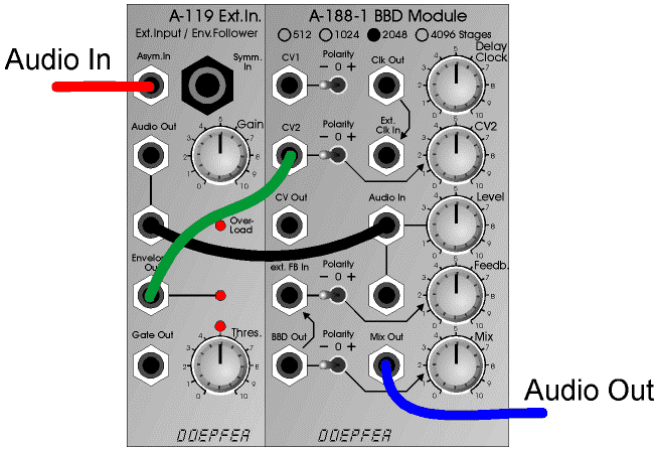

"Enveloped" BBD

Control voltage for the A-188-1 is generated by the envelope of the processed audio signal. Try positive and negative setting of the CV2 polarity switch and different CV2 levels !

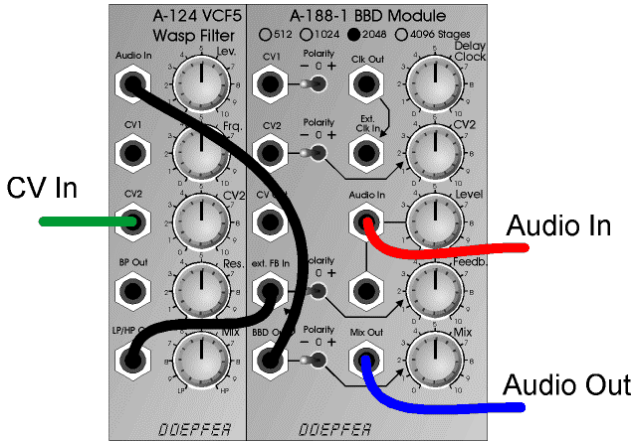

Filtered Feedback

The feedback loop is processed by an external filter. The example shows an A-124 Wasp filter in the feedback loop. But any low pass, high pass, band pass or notch filter (even multiple filters like A-104 or A-127), phasers (A-101-3, A-125) or frequency shifter (A-126) can be used.

Especially for the Karplus/Strong Synthesis (see below) a low pass filter is useful in the feedback loop to simulate the natural behaviour of a plugged string by damping higher frequencies in the decay phase.

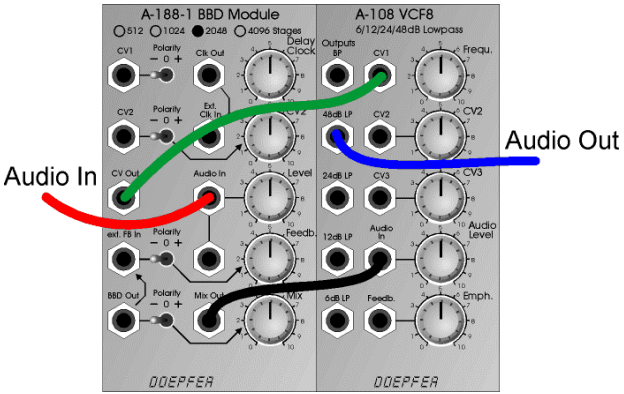

Clock Filter

The BBD audio output is filtered with a low pass (e.g. A-108). The frequency of the low pass filter follows the BBD clock frequency as the CV output of the module A-188-1 is used to control the frequency of the low pass filter. A second filter can be used at the audio input of the A-188-1 to limit the frequency range of the processed audio input signal.

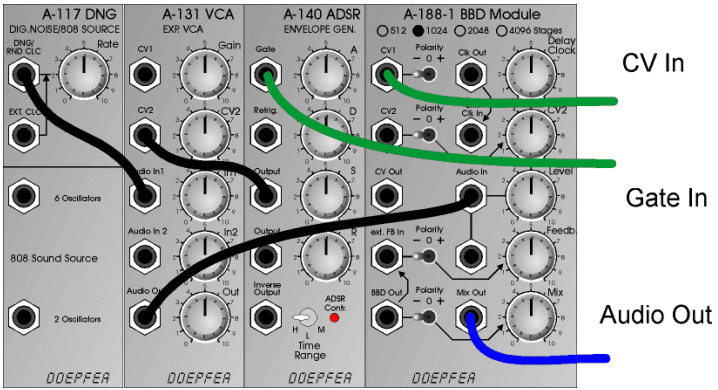

Basic Karplus/Strong Synthesis Patch

CV and gate are delivered e.g. by a sequencer, ribbon controller, Midi-to-CV interface or Theremin. The time parameters of the envelope generator (ADSR A-140) and the feedback settings of the A-188-1 define the sound – especially the decay time. If voltage controlled envelope generator (e.g. A-141) and a VCA or VC polarizer are used to process the feedback loop all parameters are voltage controlled. Even other sound sources (6 oscillators or 2 oscillators of the A-117, noise signal of an A-118, or VCO, or only short "click" of the ADSR) can be used. For more realistic Karplus/Strong applications a filter in the feedback loop can be used (see previous page).

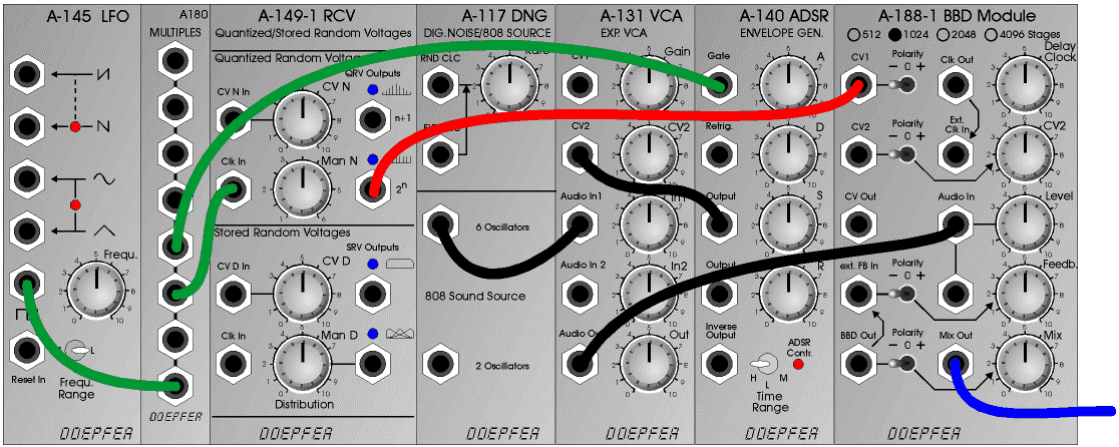

Karplus/Strong Random melody patch (A149/1)

This patch shows another example for the Karplus/Strong synthesis. The LFO A-145 is used as clock oscillator but any other clock source could be used as well. The rectangle output is connected to the clock input of the Quantized / Stored Random Voltages module A-149-1 (upper or lower section may be used) and to the gate input of the envelope generator A-140. One of the quantized or stored CV outputs of the A-149-1 is patched to the CV1 input of the A-188-1. The rest of the patch is the same as the basic Karplus/Strong Synthesis Patch (only the "6 oscillators" output of the A-117 is used instead of the digital noise output in the basic patch).

The patch generates a random melody. The tempo is defined by the LFO rate, the tone range by the "N" settings of the A-149-1 (Manual "N" and possibly CV "N"). Additional modules can be used e.g. to modulate "N" of the A-149-1 or the decay time of a voltage controlled envelope generator (e.g. A-141 or A-142 instead of the A-140) by another random voltage of the A-149-1.

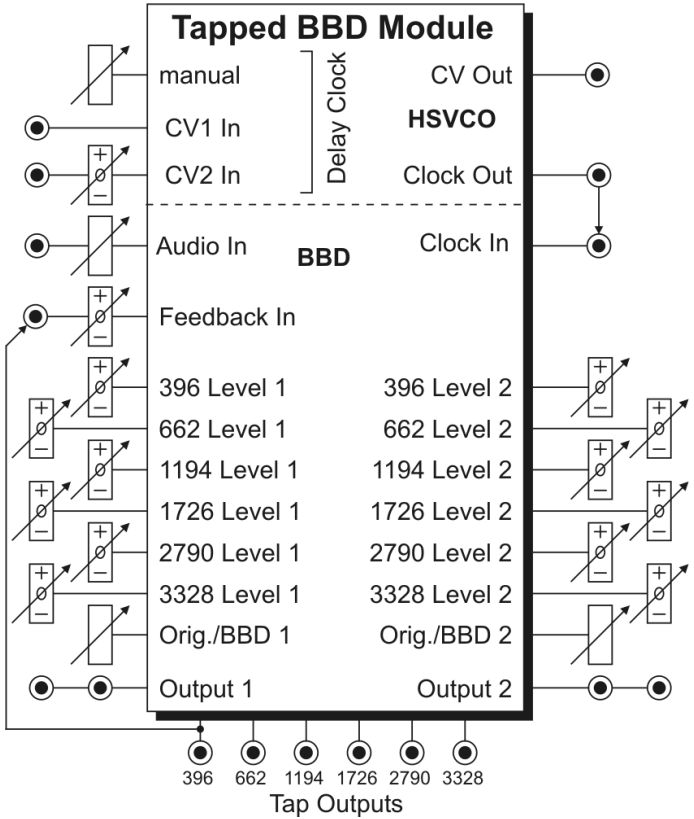

Fig. 1: A-188-2 Controls and In/Outputs

1. Introduction

Module A-188-2 based on a so-called Bucket Brigade Device (abbr. BBD). In contrast to the A-188-1 the A-188-2 uses a *tapped BBD* circuit, i.e. the circuit has available six different outputs at the BBD stages 396, 662, 1194, 1726, 2790 and 3328. Each of the taps is available as a single output but the module features also two mixing sub-units. For both mixers the levels and polarities of each BBD output can be adjusted to obtain two different mixtures. Each mixer has a wet/dry control that allows choosing between the original signal, the BBD mix or anything in between. The outputs can be treated as stereo outputs but that's not . Due to the six taps even six different feedback types are possible. The *feedback input* socket is normalled to the "396" output. But by patching the feedback socket to any of the single output sockets another BBD tap can be used for positive or negative feedback to obtain different sounds. Even external feedback processing is possible. The A-188-2 uses a high speed VCO to generate the BBD clock. The clock and consequently the delay time can be controlled manually and by the two control voltage inputs *CV1* and *CV2*. CV2 is equipped with a polarizer. The module has a clock output available that is normalled to the clock input socket. These sockets can be used to link different BBD modules and to run them with the same clock. A voltage composed of the manual delay control, CV1 and CV2 is available at the CV out socket, e.g. to control an external clock suppression filter as the A-188-2 is not equipped with such a filter.

2. Basic Principles

A BBD circuit can be regarded as a chain of Sample & Hold units (S&H) which pass on their voltages to the next S&H in the chain at each clock pulse. From this also the name Bucket Brigade Device is derived as each stage of the BBD can be treated as a bucket. At each clock pulse the content of each bucket is forwarded to the next bucket in the chain and the current bucket is filled with the contents of the preceeding bucket.

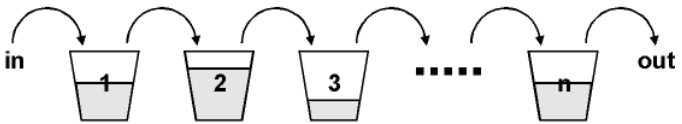

Fig.2: Bucket Brigade

Remark: In reality two "buckets" are required for each stage as the content of a bucket has to be stored temporarily in a "slave bucket" before it can be filled with the contents of the preceeding bucket, in contrast to a "real" bucket brigade not the buckets are passed on but only the contents.
In the BBD the water is replaced by analog voltages which again represent audio signals. The first bucket (1) is the audio input, the last bucket (n) is the output of the BBD. As in reality there are losses while the water (resp. voltage) is passed on, because some drops of water go wrong and at the end of the chain not the same amount of water (resp. not exactly the same voltage) appears. In a BBD the buckets are replaced by capacitors and analog switches. As the capacitors of a BBD are very small (some pF only) even the time required to pass on the input to the output is crucial as the capacitors loose their charges if it takes too long. This is why a minimum clock frequency is specified for each BBC circuit. Below this frequency the flawless operation of a BBD is not guaranteed. In the A-188-2 intentionally frequencies can be used that go below this value to obtain special "dirty" and "crunchy" effects.
Standard BBD circuits as described above are available (or rather have been available) with different numbers of stages. Usual numbers are 128, 256, 512, 1024, 2048 or 4096 stages. In the A-188-2 a very special BBD circuit with 3328 stages is used (MN3011) that is equipped with additional outputs (taps) at the stages 396, 662, 1194, 1726 and 2790.
The number of stages defines the delay time that corresponds to a certain clock frequency. The higher the number of stages, the longer is the delay. The higher the clock frequency, the shorter is the delay.

Example: At 100kHz clock frequency the delay time is 10.24 ms for a BBD with 1024 stages and 20.48 ms for a BBD with 2048 stages.

The following table shows the relation between clock frequency, used output stage (tap) and delay time for the BBD circuit used in the A-188-2 (MN3011).

Table 1: Relation between clock frequency [kHz], used output (tap) and delay time [ms]

clock frequency (clock input socket)	BBD clock frequency (= 1/2 clock input)	MN3011 tap/stage output					
[kHz]	[kHz]	**396**	**662**	**1194**	**1726**	**2790**	**3328**
1	*0,5*	*396,00*	*662,00*	*1194,00*	*1726,00*	*2790,00*	*3328,00*
2	*1*	*198,00*	*331,00*	*597,00*	*863,00*	*1395,00*	*1664,00*
5	*2,5*	*79,20*	*132,40*	*238,80*	*345,20*	*558,00*	*665,60*
10	*5*	*39,60*	*66,20*	*119,40*	*172,60*	*279,00*	*332,80*
20	10	19,80	33,10	59,70	86,30	139,50	166,40
50	25	7,92	13,24	23,88	34,52	55,80	66,56
100	50	3,96	6,62	11,94	17,26	27,90	33,28
200	100	1,98	3,31	5,97	8,63	13,95	16,64
300	*150*	*1,32*	*2,21*	*3,98*	*5,75*	*9,30*	*11,09*
400	*200*	*0,99*	*1,66*	*2,99*	*4,32*	*6,98*	*8,32*
500	*250*	*0,79*	*1,32*	*2,39*	*3,45*	*5,58*	*6,66*

Remarks:

The *grey italic* characters indicate parameters out of the data sheet specifications as the MN3011 circuit is specified only for clock frequencies between 10kHz and 100kHz. But the A-188-2 is able to generate even clock frequencies below 10kHz and above 100kHz. From our experience the MN3011 cannot be damaged if it is operated with frequencies out of spec. This is why we decided to include *out-of-spec* frequencies to obtain special audio effects – especially for clock frequencies below 10kHz. But the regular circuit behaviour is no longer guaranteed (especially increasing voltage losses at lower frequencies). As the clock frequency falls below ~ 15 khz the clock signal itself will become audible. This clock noise can be used as unusual audio source or it can be filtered out with an external low pass filter.

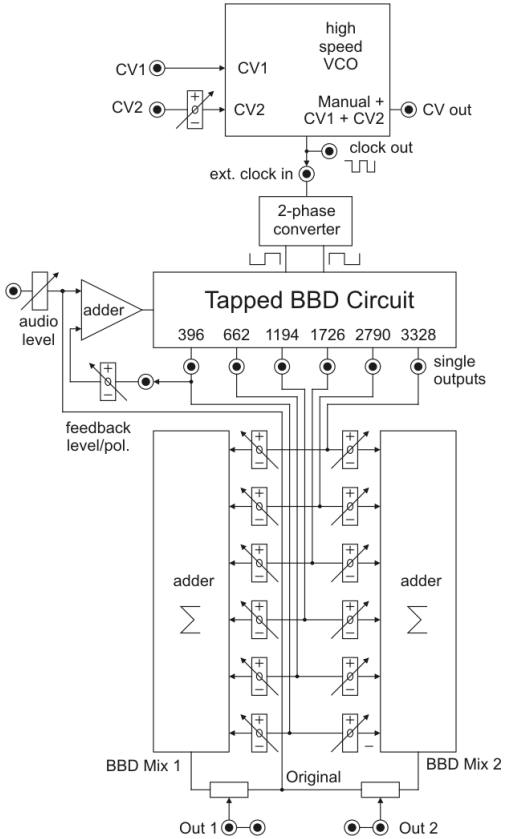

Fig. 3: A-188-2 module scheme

Fig. 3 shows the internal circuit details of the module: the upper part is the high speed VCO (HSVCO), the lower part the actual BBD section.

The HSVCO generates the clock signal that is required to drive the BBD. It has available a manual control and two CV inputs. CV1 is without attenuator and follows approximately the 1V/octave standard (for precision 1V/octave applications an external precision HSVCO is required). CV2 is equipped with a polarizer.

Polarizer function: In the center position of the polarizer control the effect of the control voltage applied to the socket CV2 is zero. Turning the knob clockwise from the center position the control voltage effect becomes positive with increasing amount. Turning the knob counterclockwise from the center position the control voltage effect becomes negative with increasing amount.

The HSVCO has a CV output available that corresponds to the sum of all CVs that define the HSVCO's frequency, i.e. the manual control, CV1 and CV2. It's main purpose is to control the CV input of external low pass filter(s) that can be used as anti-aliasing filter and clock filter. If desired a low pass filter can be used behind the audio output(s) to suppress the clock noise when the clock frequency falls below ~15 kHz. Another filter can be used at the audio input to reduce the max. frequency of the incoming audio signal, consequently reducing aliasing artefacts. As the CV output reflects the clock frequency (affected by the manual control, CV1 and CV2) the external filters automatically follow the clock frequency of the BBD module. The higher the slope of the external filter (e.g. 12/24/48 dB/octave) the better is the clock suppression. The HSVCO features also a clock output that can be used e.g. to synchronize two A-188-2 or an A-188-2 and A-188-1 (i.e. both BBD modules use the same clock source) or as high speed clock for other applications (e.g. graphic VCO, switched capacitor filter).

The clock output of the HSVCO is normalled to the clock input of the BBD section. The clock input makes it possible to control the BBD by an external clock source (e.g. another A-188-2 or A-188-1 or any other clock signal in the required frequency range). For all clock signals from and to the A-188-1/2 only short patch cables should be used, as long cables function as low pass filters for signals above 20kHz.

A two-phase converter generates the two opposite clock signals that are required to drive the BBD circuits.

The audio input of the BBD module is equipped with an attenuator that enables to reduce the input level to avoid distortion. The audio input signal behind the attenuator is mixed with the feedback signal (details below) and fed to the audio input of the BBD circuit.

Each tap of the BBD circuit is available as a single output: 396, 662, 1194, 1726, 2790 and 3328. These outputs can be used for example in an additional external (e.g. voltage controlled) mixer or for multi-channel applications (e.g. 5.1).

Each tap is connected to two polarizers (the polarizer function is described on the last page). One of the polarizers is assigned to the sub-mixer 1, the second to sub-mixer 2. The sub-mixers are labelled *adder* with the Σ sign (sum) in the module scheme. The reason for the polarizers instead of simple attenuators is that the polarity of each tap is crucial for the output mixing (for both tap output + original signal and even for the taps among each other).
The following sketch shows the difference between adding and subtracting one tap output to/from the original signal by means of a simple sawtooth signal as audio input.

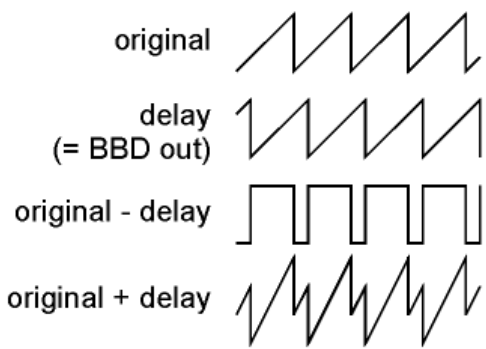

Fig. 4: positive/negative mixing of original and BBD signal

The two sub-mixers are used to mix the outputs of the six BBD taps with adjustable levels and polarities. Each sub-mixer has available wet/dry control to adjust the relation between the original and the effect signal. The effect signal is the sum of the tap outputs.

The A-188-2 features a feedback section that is very similar to the one in the A-188-1. But as now six different BBD outputs are available even six different feedback types are possible. The *feedback input* socket is normalled to the *396* output. But by patching the feedback socket to any of the other single output sockets another BBD tap can be used for the feedback to a obtain different sound. Even external feedback processing is possible (e.g. a VCA or a VC polarizer for voltage controlled feedback, or other modules like filter, phaser, frequency shifter, waveshaper, wave multiplier, ring modulator or another BBD module for special voltage controlled feedback effects). The feedback control has polarizer function, i.e. the neutral position is at the center. Left from the center the feedback signal is subtracted from the input signal, right from the center it's added (negative/positive feedback). The polarity of the feedback signal leads to clearly audible different sounds as different frequencies are emphasized or attenuated for positive or negative feedback.

The feedback can be increased up to self-oscillation. In contrast to other feedbacks (e.g. filters or phasers) the result in the self-oscillation state depends upon the "audio history" (i.e. the contents of the BBD when the self-oscillation is triggered). The reason is that there is not only one possible stable self-resonant state for the BBD. Any cyclic waveform "stored" in the BBD is able to resonate provided that the feedback maintains the waveform. One can try this out e.g. with different audio signals (e.g. digital noise and VCO sawtooth) as audio input before self-oscillation is triggered.

A special feedback can be obtained if one of the sub-mixer outputs is used for the feedback function. In this case for each tap the positive or negative feedback share can be adjusted. This leads to multiple peaks and/or notches in the frequency response of the module.

3. Overview

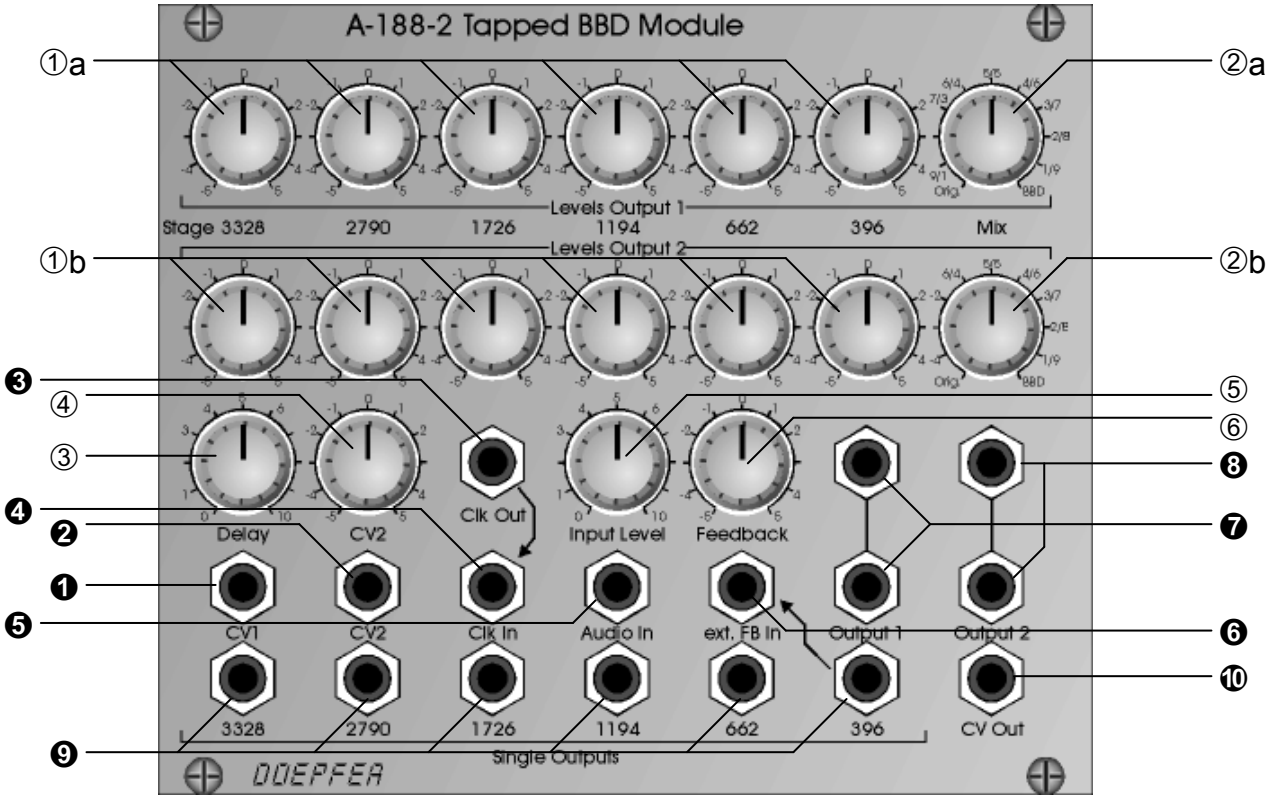

Fig.5: A-188-2 front panel

Controls:

①a, ①b :	mix levels/polarities of the BBD taps 3328, 2790, 1726, 1194, 662 and 396 (polarizers)
②a, ②b Mix:	wet/dry controls for outputs 1 and 2 (①/②**a** are assigned to sub-mixer 1) (①/②**b** are assigned to sub-mixer 2)
③ Delay :	manual delay/clock control
④ CV2:	attenuator for CV2
⑤ Input Level:	audio input attenuator
⑥ Feedback:	feedback level and polarity control (polarizer)

In- / Outputs:

❶ CV1:	CV1 input HSVCO
❷ CV2:	CV2 input HSVCO
❸ Clk Out:	clock output HSVCO
❹ Clk In:	BBD clock input (normalled to Clock Out ❸)
❺ Audio In:	audio input
❻ Ext.FB In:	external feedback input (normalled to BBD Out ❾ 396)
❼ Output 1:	mixed audio output 1
❽ Output 2:	mixed audio output 2
❾ Single outputs:	single audio outputs of the taps 3328, 2790, 1726, 1194, 662 and 396
❿ CV Out:	CV output HSVCO

4. Controls and In- / Outputs

4.1. High Speed VCO Section

③ Delay : manual delay/clock control
❶ CV1: CV1 input HSVCO
❷ CV2: CV2 input HSVCO
④ CV2: attenuator for CV2
❸ Clk Out: clock output HSVCO
❿ CV Out: CV output HSVCO

This group of elements is responsible for the clock frequency generated by the high speed VCO (HSVCO). knob ③ *Delay Clock* is used to adjust the clock manually. Two CV inputs (❶ CV1, ❷ CV2) are available to control the clock by external control voltages (e.g. LFO, envelope follower, random, ADSR, keyboard CV, sequencer, theremin, ribbon controller, foot controller, Midi-to-CV, shepard generator ...). The sensitivity of CV1 is approximately 1V/octave. The diagram on the right side shows the connection between CV1 and clock frequency. The straight line represents the perfect 1V/oct graph. The slightly bended curve is the real behaviour of the HSVCO. If an absolutely "perfect" 1V/octave control is required an external precision HSVCO or a VCO with PLL has to be used.
The second control voltage input ❷ CV2 is equipped with a polarizer. The function of a polarizer is described on page 5.

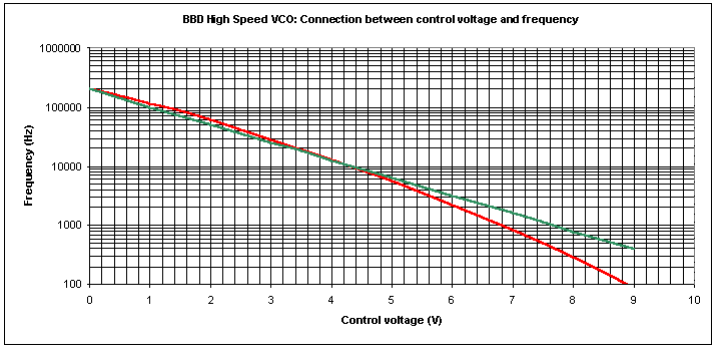

Fig 6: relation between CV1 and Clock Frequency

❸ Clk Out: clock output HSVCO

This is the clock output of the HSVCO. It is internally connected to the clock input of the BBD section. The waveform is rectangle with about ± 3V level. The rectangle slopes flatten with increasing frequency and the waveform turns more and more into triangle. Even the load on the output has influence to the waveform and level. Consequently for all clock patches from and to the A-188-2 only short patch cables (~ 30 cm) should be used because long cables function as low pass filters for signals above 20kHz. The max. frequency at this output is about 250 kHz.

⓾ CV Out: CV output HSVCO

This CV output indicates the clock frequency at output ❸ and is nothing but the sum of all CV inputs (manual, CV1 and CV2). The main purpose of this output is to control the CV input of external low pass filters that can be used as anti-aliasing filter and clock filter. If desired one low pass filter can be used behind the audio output to suppress the clock noise, especially when the clock frequency falls below ~15 khz. Another filter can be used at the audio input to reduce the max. frequency of the incoming audio signal, consequently reducing aliasing artefacts. As the CV output reflects the clock frequency (affected by the manual control, CV1 and CV2) the external filters automatically follow the clock frequency of the BBD module. The higher the slope of the external filter (e.g. 12/24/48 dB/octave) the better is the clock suppression. But the CV output can be used for other applications as well, e.g. controlling parameters of the feedback loop like feedback amount/polarity (CV of a VCA or VC polarizer used in the feedback loop), filter frequency (CV of a VCF used in the feedback loop), phase shift (CV of a VC phaser used in the feedback loop).

4.2. BBD and Sub-Mixer Section

❹ Ext. Clk In: BBD clock input

This is the clock input of the BBD section and is internally connected to the clock output ❸ of the HSVCO section (i.e. it is normalled to the Clock Out socket ❸). If an external clock source is used the clock output of this source is patched to socket ❹. In this case the internal connection to the HSVCO is interrupted. The clock frequency table can be found on page 3. The required level for the clock signal is about +3V (levels up to +12V cause no problems). This socket can be used e.g. to synchronize two A-188-2 modules or an A-188-2 and A-188-1 (i.e. using one HSVCO for both modules).

❺ Audio In: audio input
⑤ Level: audio input attenuator

Sockets ❺ is the audio input with the assigned attenuator ⑤. Feed the audio signal that has to be processed by the A-188-2 into socket ❺. Adjust the *Level* control ⑤ so that the output signal does not distort - unless you want to obtain distortion. For normal A-100 levels (e.g. VCO A-110) distortion appears at about three o'clock position of control ⑤.

❾ Single Outputs

The six sockets ❾ are the "raw" outputs (taps) of the BBD stages 3328, 2790, 1726, 1194, 662 and 396. These outputs can be used e.g. for for feedback patching, for external mixing (e.g. with a voltage controlled mixer) or for multi-channel applications (e.g. 5.1 sounds).

①a, ①b :	mix levels/polarities of the BBD taps 3328, 2790, 1726, 1194, 662 and 396 (polarizers)
②a, ②b Mix:	wet/dry controls for outputs 1 and 2 (①/②**a** are assigned to sub-mixer 1) (①/②**b** are assigned to sub-mixer 2)
❼ Output 1:	mixed audio output 1
❽ Output 2:	mixed audio output 2

This group of elements is responsible for the two mixed outputs appearing at the sockets ❼ *Output 1 and* ❽ *Output 2*. In the left/ccw position of the knobs ②a/b *Mix* the original signal appears at the sockets ❼/❽. In the right/cw position of the knobs ②a/b *Mix* the internal pre-mix signal composed from the the six BBD taps with the polarizers ①a/b appears at the sockets ❼/❽. In the intermediate positions of the knobs ②a/b *Mix* a mix of these two signals appears at the corresponding output socket.

❻ Ext.FB In:	external feedback input
⑥ Feedback:	feedback level and polarity control (polarizer)

This group of elements is responsible for the feedback functions of the module. Socket ❻ *Ext.FB In* is the input of the feedback loop and is normalled to socket ❾ *BBD Out 396*. Patching the feedback socket to any of the other single output sockets another BBD tap can be used for the feedback function to a obtain different sound. If an external module is used to control the feedback loop (e.g. a VCA or VC polarizer) the module has to be inserted between one of the six sockets ❾ *BBD Out* and socket ❻ *Ext.FB In*. The feedback control ⑥*Feedback* is a polarizer with the neutral position at the center. Left from the center the feedback signal is subtracted from the input signal, right from the center it's added (negative/positive feedback). The polarity of the feedback signal leads to clearly audible different sounds especially at short delay times as different frequencies are emphasized or attenuated for positive or negative feedback. For longer delay times ("analog delay" application) the sound differences are much smaller
In the fully right/cw or fully left/ccw position of the feedback control ⑥ the module goes into self-oscillation. As already mentioned in chapter 2 the result in the self-oscillation state depends upon the "audio history" (for details please refer to page 7).

5. User Examples

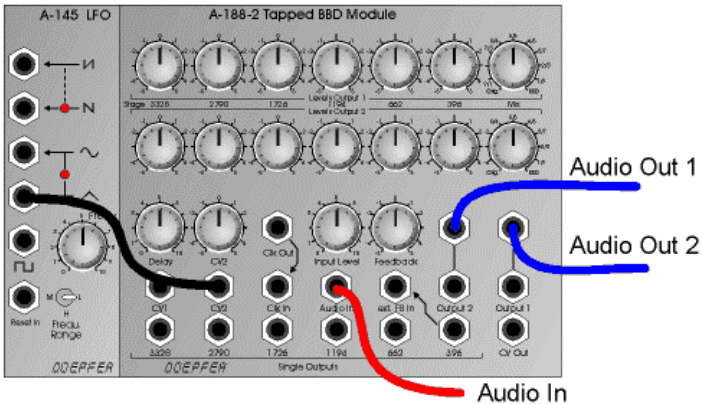

Standard Modulation Patch

Suitable control voltage sources are LFO (A-145 as shown in the example, A-146, A-147, A-143-3), random voltage (A-118, A-149-1), envelopes (A-140, A-141, A-142, A-143-1, A-143-2), S&H (A-148, A-152), sequencer (A-155), theremin (A-178) or ribbon controller (A-198).

Even for the "enveloped BBD" patch with the envelope follower of the A-119 as control voltage the A-188-2 can be used (described in the user's manual of the A-188-1 on page 13).

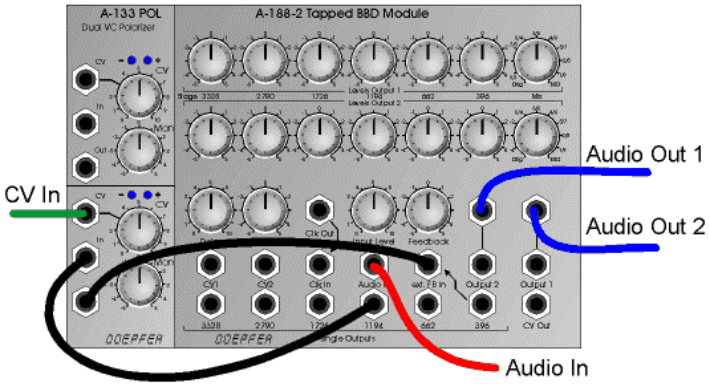

Voltage Controlled Feedback

The feedback is processed by an external voltage controlled polarizer (A-133) to obtain voltage controlled feedback. Instead of the polarizer even a VCA can be used. But with a VCA only positive or negative feedback is possible. Any of the single outputs of the A-188-2 can be used for the feedback loop. Even other sound processing modules (e.g. filters, frequency shifter, wave multiplier, spring reverb, phaser) can be used for voltage controlled feedback processing.

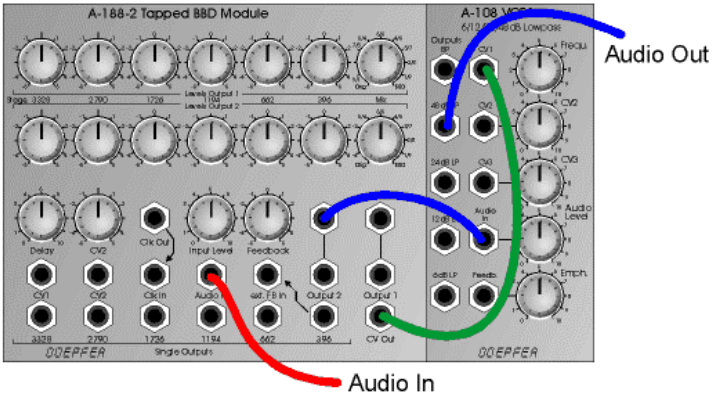

Clock Filter

The BBD audio output is filtered by a low pass (e.g. A-108). The frequency of the low pass filter follows the BBD clock frequency as the CV output of the module A-188-2 is used to control the frequency of the low pass filter. If both outputs have to be filtered another low pass is required for the second output.

An additional filter can be used at the audio input of the A-188-2 to limit the frequency range of the processed audio input signal.

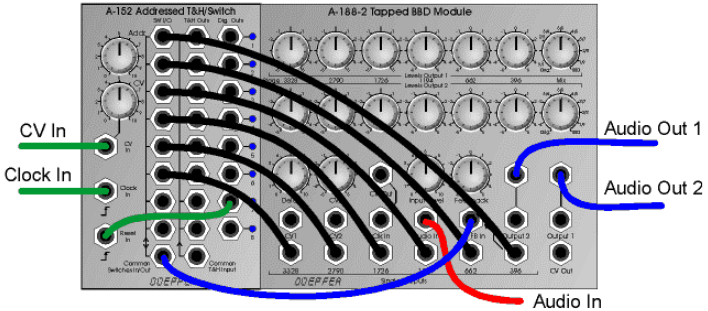

Clocked or voltage controlled feedback type

The single outputs of the A-188-2 are patched to the inputs of the addressed switch A-152. The common output of the A-152 is patched to the feedback input of the A-188-2. The CV or the clock input of the A-152 is used to switch between different feedback types. If a sequencer is used for each step of the sequence another feedback type can be chosen. The digital output #7 of the A-152 is connected to the reset input to limit the number of used steps to six.

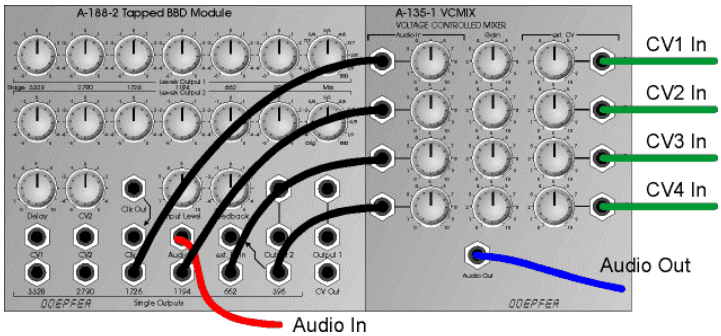

Voltage controlled output mixing

Four of the single outputs of the A-188-2 are patched to the audio inputs of a voltage controlled mixer A-135-1. The four control voltages of the A-135-1 are used to define the levels of the BBD taps.

Even the Karplus/Strong patches described in the A-188-1 user's manual can be realized with the A-188-2. The mixed outputs of the A-188-2 lead to more complex sounds compared to the A-188-1.

1. Introduction

> ⚠ **To install the** A-190 please look at the **important information** on **p. 4**!

The **A-190** is a **MIDI-CV/SYNC Interface,** with which you can control any A-100 Module which has CV and gate/trigger input sockets by MIDI.

The A-190 has **two Digital-to-Analogue converters** (DAC for short), which put out control voltages from 0 V to +5 V, so that you can control not just the pitch, but also another voltage-controllable parameter on the A-100.

DAC 1 is 'hard-wired' to receive MIDI **note messages** and convert them into control voltages available at CV output socket **CV 1.** The DAC has 12-bit resolution, which gives excellent tuning resolution (in steps of 1/4096th). As a rule, DAC 1 will be used to **control VCO pitch**.

DAC 2 can be assigned to your choice of **MIDI controller**. This DAC has 7-bit resolution (1/128th steps). Its output is available at **CV 2,** and can be used for voltage control of any suitable module (eg VCF, VCA, etc.).

The A-190 also has a **clock output**, controlled by **MIDI clock**. This can be divided down to provide a variety of clock outputs, and enable older sequencers or drum machines to be synced to MIDI.

A **Reset Output** provides control of the A-160 / 161 Clock Divider / Sequencer or can produce MIDI-synchronised gates (for instance on an ADSR). MIDI START or CONTINUE messages make the voltage at the Reset output go low, and MIDI STOP messages make it go high.

In addition, the A-190 allows for **portamento** (glide) and **pitch-bend**, and provides a software **LFO.** These functions can all be switched on and off or altered by MIDI controllers.

All control parameters can be saved in **non-volatile memory**.

☞ The A-190 needs an additional power supply (+5 V / 50 mA) for connection to the system bus.

2. Overview

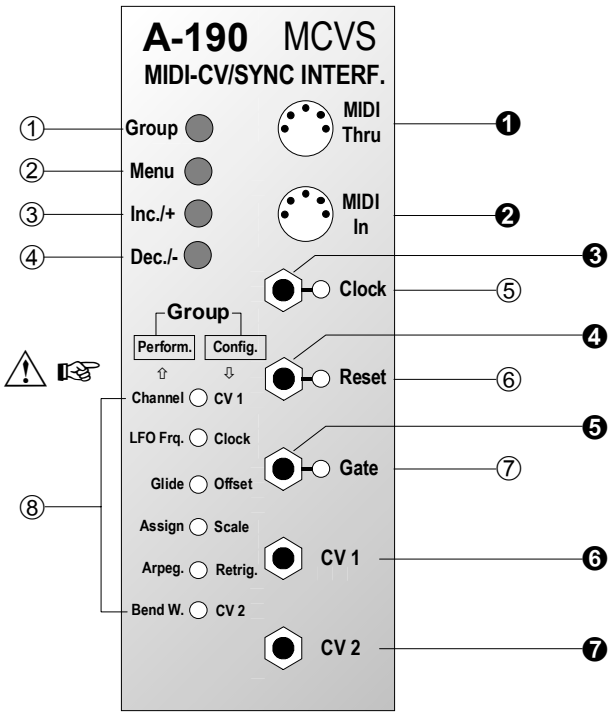

Controls and indicators

① **Group** : Button to select which menu section (out of the Config and Performance menus), is available for editing

② **Menu** : Button to select items in Edit Mode, choose items to be edited, and select items in Performance Mode

③ **INC / +** : Button for increasing a parameter value by one step at a time

④ **DEC / -** : Button for decreasing a parameter value by one step at a time

⑤ **Clock** : LED clock signal indicator for output ❸

⑥ **Reset** : LED reset signal indicator for output ❹

⑦ **Gate** : LED gate signal indicator for output ❺

⑧ **LEDs** : Indicate the menu selected in edit mode

In / Outputs

❶ **MIDI THRU** : Output for relaying MIDI messages sent to MIDI IN to another MIDI unit.

❷ **MIDI IN** : Input for MIDI messages.

❸ **Clock** : MIDI clock signal (or divided version) output.

❹ **Reset** : Reset signal output:-
MIDI-Start or Continue): low voltage
MIDI-Stop: high voltage.

❺ **GATE** : GATE signal output; normally connected internally to the A-100 system bus (INT.GATE line), but can be disconnected.

❻ **CV 1** : Output for control voltage 1 (D/A converter 1); normally connected internally to the A-100 system bus (INT. CV line), but can be disconnected.

❼ **CV 2** : Output for control voltage 2 (D/A converter 2).

☞ **N.B.:**

On the front panel of the first production series , the arrows were accidentally printed the wrong way round.

In these instructions, though, all the functions, for instance selecting a menu group, are described correctly (see p. 6).

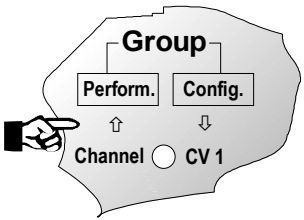

3. Starting to use the A-190

> ⚠ **N.B. if you're using more than one A-190:**
>
> The A-190 is normally connected up to the INT.CV und INT.GATE on the system bus.
>
> If you want to run **more than one A-190** with only a single system bus, then only one of the A-190s must be connected to the system bus.
>
> Disconnect the other A-190 modules from the system bus, by cutting the **two** links labelled **CV1** and **GATE** (near the bus ribbon connector on the A-190 board).

Before switching your system on, use a MIDI cable to connect between your MIDI instrument and the A-190:

❒ Connect the A-190's input socket MIDI IN ❷ to the MIDI OUT socket of your MIDI instrument (master keyboard, MIDI synth, MIDI sequencer, etc.).

❒ Now switch your System A-100 on. The Gate LED ⑦ will briefly light up, to show you the A-190's software version (one blink = Version 1, etc.).

❒ Patch the outputs of your A-190 to corresponding modules on the System A-100:

☞ The **gate output ❺** and **CV1 output ❻** are automatically connected to the system bus of the A-100, so don't use patch cables to connect these, unless you have cut the links, or wish to connect to a module whose system bus isn't connected with the A-190's (have a look at the note on using more than one A-190). VCOs on the same system bus automatically receive CV1, and ADSRs automatically receive the gate signal.

Output	Connection notes
❼ CV 2	Any module's CV input (for instance a VCF's CV input, for controlling the filter cut-off point).
❸ Clock	For instance, the A-160's trigger input for MIDI-synced sequences.
❹ Reset	The A-160's reset input, for MIDI control of start and stop messages; the A-140's gate or retrigger input for MIDI-synchronised envelopes.

❒ Use the CONFIG and PERFORM menus to tailor the MIDI set-up to your requirements.

4.1 Using the A-190

On power up, the A-190 defaults to **Performance mode**. This is the normal mode of operation, in which the incoming MIDI information is converted to CV, gate and clock signals, according to the A-190's settings. You can check you're in performance mode by seeing if all the **menu LEDs** (⑧) are **off**. The gate LED ⑦, reset LED ⑥ and clock LED ⑤ will light up in response to MIDI activity:

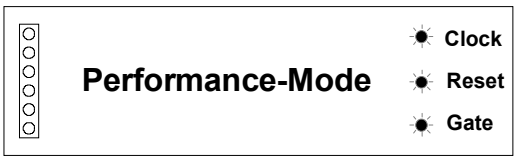

Since the A-190 gives you so many options for changing the way MIDI information is converted, it was necessary to use a menu system for setting the various parameters. There are two groups of menus, with six menus in each.

The **performance menus** are where you can change important **playing parameters** such as bend width and portamento time - the sort of parameters to which you need easy and frequent access .

The **Config menus**, on the other hand, contain **configuration parameters**, which are fundamentally important to the whole MIDI set-up, but as a rule don't need to be changed often (for instance gate polarity, voltage response, or re-trigger time).

To alter parameters, you need to be in **edit mode**. The procedure is as follows:

- Select the menu group
- Switch to edit mode
- Select the menu which contains what you want to edit
- Alter the parameters either manually or by MIDI
- Return to performance mode.

Selecting menu group

The A-190 is designed so that, after power up, the first time you enter edit mode, you automatically go to the performance menu group.

Pressing the **Group** button ① switches to the other menu group - the button acts as a toggle switch. A mini-light-show indicates which group is selected:

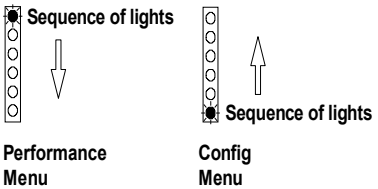

For example, if, after switching on, you need to alter GATE POLARITY in Config Menu 1, press the **Group** button ① once. The light sequence goes upwards from the bottom LED, and tells you that when you press the edit button you will be in the Config Menu.

Changing to edit mode

When in performance mode, switch over to **edit mode** by pressing the **MENU** button ②. The **top LED flashes,** to tell you that you're in edit mode, and can now access the parameters in the first menu in the group you selected with the group button:



You can tell which **menu group** you're in by checking the **speed at which the LED** (⑧) **blinks**:

slow blink : **Config** menu

fast blink : **Performance** menu

☞ (Symbols in the text: : slow : fast)

Menu selection

If the parameter you want to edit isn't in the first menu, scroll through the other menus by repeatedly pressing the **MENU** button ② (see the diagram on the next page).

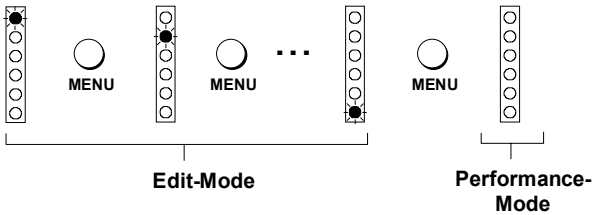

Changing parameters

There are two ways of changing parameters on the A-190: either manually, or by sending the appropriate MIDI messages, which the A-190 'learns'. Whenever possible, use the latter method, 'MIDI learning'. In chapters 4.2 and 4.3, the symbols (MIDI learning) and (manual) show the different methods possible.

In **manual** mode, use the **INC** button ③ to increase a parameter by one, and the **DEC** button ④ to decrease it by one. All the LEDs flash once together each time a change is made.

In **MIDI learning** mode, parameters are changed by sending appropriate MIDI messages to the A-190. For example, in Config menu 1, the MIDI message "PROG CHANGE 3" switches CV CHAR. (the type of pitch control voltage sent out) to V/Octave.

Switching back to performance mode

When you've made the change to the parameter you wanted to alter, you can either change other parameters in the same menu, or go on to the next menu by pressing **MENU** button ②. Repeatedly pressing the **MENU** button takes you through all the menus, and then back to performance mode - signified by all the menu LEDs (⑧) being off (see the diagram at top left).

☞ If you've edited a parameter in one menu group, and want to edit one in the other, it's necessary to go back to performance mode first. Then you can press the **Group** button ① to switch to the other menu group.

☞ You can find a **table** showing all the **parameters** in the CONFIG and PERFORMANCE menus, as well as all the **MIDI controllers,** on page 23.

4.2 CONFIG menus

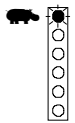

CV 1 — **Config Menu 1**

CHANNEL / REF. NOTE

The **CHANNEL** parameter sets the **MIDI receive channel.** In performance mode, MIDI messages received on this channel are converted to CV and gate signals and sent to whichever modules are connected to the A-190 - either via the system bus or via patch leads.

REF. NOTE sets the bottom note on the MIDI keyboard which will play the lowest note on the A-100 VCOs. As a rule, this is MIDI note number 36.

NOTE ON ch n vel

ch : MIDI channel
n : MIDI note number

☞ Note that playing a note on the keyboard will set MIDI channel and bottom note at the same time.

This method of setting the MIDI channel is preferable to the performance mode method, which has no confirmation.

[Change the bottom MIDI note (0 to 127)]

GATE POLARITY

This parameter sets the **polarity of the gate voltage**.

☞ For use with the A-100, this parameter should always be set to positive. The only time you may need to alter it is to control certain other makes of synthesizer.

positive: +12 V / 0 V **PROG CHANGE 1**

negative: +12 V / 0 V **PROG CHANGE 2**

CV CHAR.

This parameter sets the **voltage control characteristics** of the pitch CV output from the A-190, so that it's possible to drive both common types of analog synth - older Korgs, Yamahas, etc., which have a linear response (Hz / V), and Rolands, ARPs, Moogs, etc., which have a logarithmic response (1V / octave).

☞ For use just with the A-100, the V / octave response is all that is needed. The Hz / V option is provided purely for connecting to external synths which use that standard.

V / Octave : **PROG CHANGE 3**

Hz / V : **PROG CHANGE 4**

RETRIGGER

This parameter enables you to choose between **single** and **multiple** triggering of the ADSR. With RETRIGGER on, every time a key is pressed, **another gate signal is sent**, even if (ie in legato playing) another key is still held down at the time.

OFF : **PROG CHANGE 5**

ON : **PROG CHANGE 6**

☞ This parameter can also be changed in performance mode. If, even with RETRIGGER ON, the gate isn't reliably re-triggered, set a higher value for the **gate retrigger time** in CONFIG menu 5.

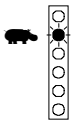

Clock — Config Menu 2

CLOCK TIME

This parameter sets the **amount by which the MIDI clock is divided** before being sent to the clock output ❸. (See 'note length' in the table below.)

MIDI Clock pulses are 1/96th Note. By setting the amount by which the clock is divided, you can choose different note lengths:

divisor	clocks per note	note length
1	96	1/96th
3	32	1/32nd
6	16	1/16th
12	8	1/8th
24	4	1/4

☞ You can also use the A-160 clock divider to produce different divisions.

PROG CHANGE n

n : Divisor (1 ... 64)
on any MIDI channel

[Increase or decrease the divisor]

CLOCK POLARITY

This Parameter sets the **polarity of the clock signals** at output ❸.

☞ For use just with the A-100, select "positive". The negative setting is provided just for connection to other synths that use a negative pulse.

positive : 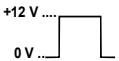

PROG CHANGE 65

negative : 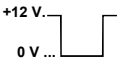

PROG CHANGE 66

Use any MIDI channel to make these changes.

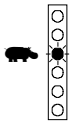

Config Menu 3

REF. OFFSET

This parameter sets the **voltage offset** for the bottom note - and works in the same way as the VCO's Tune control. In normal use, this is set to 0 V.

Increase or decrease the amount of voltage offset.

☞ The **INC**- and **DEC**- buttons speed up if you keep holding them down.

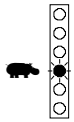

Config Menu 4

SCALE

This parameter sets the **fine scaling of the pitch-control DAC** so that MIDI and A-100 VCO notes are completely in tune over their whole range (see diagram on page 12).

After setting the bottom note and voltage offset, you send a MIDI note to the A-190 - usually the note exactly an octave or several octaves above the bottom note. Using the SCALE parameter, adjust the voltage sent to the VCO to ensure that the **octaves are completely in tune**.

☞ For use just with the A-100, it may well be fine to leave this at the standard factory setting of exactly 1.00 V / octave.

Increase or decrease the amount of voltage offest on the higher note.

☞ The **INC**- and **DEC**- buttons speed up if you keep holding them down.

In the example on page 12, after the V / octave response, bottom note (MIDI note 36) and voltage offset (0 V) have been set, the SCALE parameter is adjusted so that when MIDI note 84 (exactly four octaves above the bottom note) is received, the VCO note played is precisely four octaves higher. (That is, the pitch CV is exactly four volts.)

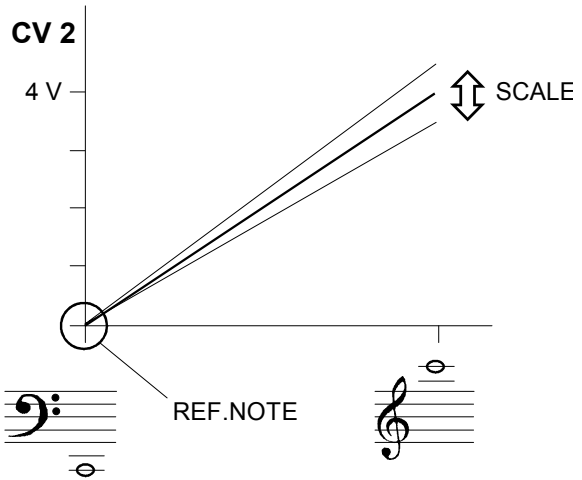



Config Menu 5

RTRIG. TIME

This parameter sets the **gate retrigger time** - ie. the time that elapses before another gate signal received triggers the envelopes.

When setting this, always start with the shortest possible retrigger time (1 ms), and see if the connected module (eg. an ADSR) triggers. If it doesn't, slowly increase RTRIG.TIME until the module does respond to each new gate.

PROG CHANGE n

n : 0 ... 127 RTRIG.TIME = n x 1 ms

[Increase or decrease the time in 1ms steps (0 to 255)]

CV 2 — Config Menu 6

ASSIGN CV2

This parameter sets which MIDI message is sent to **DAC 2,** and thus to the **CV2 output socket**. The voltage output range is from 0 to +5 V.

Number for manual setting	MIDI-Event
0	Velocity *
1	Program Change
2	Controller #n
3	Pitch Bend
4	channel aftertouch
5	polyphonic aftertouch

* a Note On/Off message must be sent

[Manual assignment (0 to 5)]

Note that you can make the A-190 learn **whatever MIDI controller you choose** as the source for DAC 2, simply by sending it via MIDI IN while in Config menu 6.

For instance, if you move the data entry control (MIDI Controller # 6) on your master keyboard while the A-190 is in Config menu 6, this controller is assigned to DAC 2, so that whenever it is moved, CV2's voltage changes correspondingly. This is equally true for Main Volume (MIDI Controller #7), Breath Controller, Foot Controller, etc.

If the resulting voltage change is too obviously quantised (because MIDI has only 128 steps), then the steps can be smoothed out with an A-170 slew limiter (see the diagram).

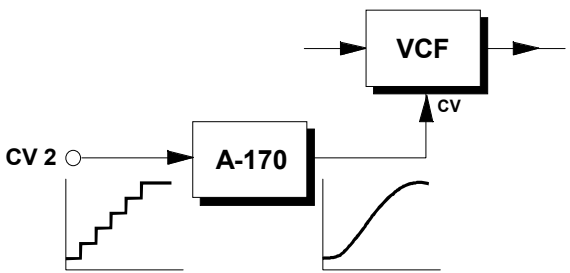

4.3 PERFORMANCE Menus

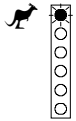

— Performance Menu 1

CHANNEL

The **CHANNEL** parameter sets the **MIDI receive channel**. MIDI messages received on this channel in performance mode are converted into CV and gate signals and output to whatever modules are connected to the A-190.

[Set the MIDI channel (1 to 16)]

☞ It's better to set MIDI channel by a MIDI message in **config menu 1**, where control is more direct.

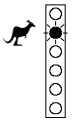

— Performance Menu 2

LFO FREQ.

The LFO Freq. parameter controls the frequency of the A-190's **built-in LFO**.

Use your ears to decide the correct frequency. With a parameter value of **less than 3,** the LFO is **switched off.**

Set the LFO frequency
(from about 0.2 Hz to 20 Hz)

☞ The **INC**- / **DEC**- buttons will speed up if you keep them pressed down.

☞ With the A-190, you're effectively getting an extra software LFO, controlled over MIDI, which can supplement the 'real' LFOs (A-145, A-146) in your A-100 system.

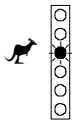

Glide — Performance Menu 3

GLIDE TIME

The Glide Time parameter controls the length of the **portamento time** in the A-190's built-in glide / portamento function, in steps of 20ms at a time.

PROG CHANGE n

n : 0 **Glide Off**
1 ... 127 **Glide On**,

GLIDE-TIME = n x 20 ms

Any channel can receive the message.

[Set the glide time (0 ... 127)]

This parameter can also be controlled in real time by means of the MIDI portamento controller (Controller #5). See chapter 4.5, PERFORMANCE mode.

This MIDI function is like a software version of the A-170 Slew Limiter.

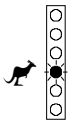

Assign — Performance Menu 4

ASSIGN MODE

The **ASSIGN MODE** parameter controls **note assignment -** that is, which note the VCO should produce when more than one key is held down at once.

Last Note Priority: **PROG CHANGE 1**

Highest Note Priority: **PROG CHANGE 2**

Any channel can receive the message.

[Select which type of note priority you want]

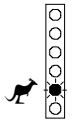

Arpeg. — Performance Menu 5

No function at present

Reserved for future expansion (e.g. arpeggiator)

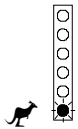

Bend W. — Performance Menu 6

BEND WIDTH

The BEND WIDTH parameter sets the **pitch bend range**. For example, if you set the range to a whole tone, the pitch bender on your MIDI instrument will alter the A-100's VCO pitch by a maximum interval of a semi-tone up or down.



The pitch bend range is set by the **interval** between two MIDI notes played in succession:

Reference note: set by the first **NOTE ON**

Range note: set by the second **NOTE ON**

Any channel can receive the message.

[ Set the pitch bend range]

4.4 Storing set-ups

The A-190 is equipped with a **non-volatile memory** (EEPROM - electrically eraseable programmable read-only memory!) which will store your set-up ready for when you switch the system back on.

If you just change the settings of various parameters, the A-100 only stores these changes **temporarily**, and they'll be lost when you switch the A-100 off. To store any changes in the set-up, you have to **save** the set-up, by simultaneously pressing both the **INC-** and **DEC- buttons**. The A-190 **signals that the save procedure has been successful** in the following way :

- All LEDs **light up** while you press the buttons.
- All LEDs blink slowly for around three seconds.
- All LEDs blink quickly for around three seconds.
- The **save procedure** is then completed, and all the **LEDs go out**. The next time the A-100 is switched on, the set-up will be recalled.

It's possible to **abort** the save procedure, by pressing any button while the LEDs are still blinking. In this case, all parameters revert to how they were before the save procedure started.

☞ It's a much better idea to carry out the **save procedure** in **PERFORMANCE mode** (indicated by all menu LEDs ⑧ being off).

If you carry out this procedure in EDIT mode (shown by one of the menu LEDs blinking) there's always the danger of the active parameter being increased or decreased by one step the instant before it's saved, because of the physical difficulty of pressing the **INC** and **DEC** buttons at precisely the same time.

It's always possible to alter the default set-up with which the A-190 leaves the factory (see chapter 4.6, Initialisation).

4.5 PERFORMANCE mode

In **performance mode** the A-190 converts incoming MIDI messages into CV and gate signals. As well as those already mentioned in chapter 4.4, it also recognises and converts the following controller messages. (☞ "**ch**" is short for 'MIDI channel').

CONTROLLER #01 (Modulation)

This controller affects modulation intensity - ie. the amount of LFO voltage included in CV1.

CONTROL ch 01 n

n : 0 to 127

CONTROLLER #05 (Portamento Time)

This controller affects **portamento time** (see PERFORMANCE menu 3). Changes made using this controller are only temporary: they are not stored during the 'save' procedure, and on power-up, the A-100 will revert to the default factory setting.

CONTROL ch 05 n

n : 0 to 127 Portamento time

CONTROLLER #64 (Sustain)

This controller switches **sustain** on and off.

CONTROL ch 64 n

n : 0 to 63 Sustain Off
64 to 127 Sustain On

CONTROLLER #65 (Portamento)

This controller switches **portamento** on and off.

CONTROL ch 65 n

n : 0 ... 63 Glide Off
64 ... 127 Glide On

CONTROLLER #68 (Legato)

The **retrigger function** (see CONFIG menu 1) can also be switched on and off by this controller. Changes made using this controller are only temporary: they are not stored during the 'save' procedure, and on power-up, the A-100 will revert to the default factory setting.



CONTROL ch 68 n

n :	0 to 63	Retrigger Off
	64 to 127	Retrigger On

CONTROLLER #92 (Tremolo)

This controller can affect **LFO frequency** (see PERFORMANCE menu 2). Changes made using this controller are only temporary: they are not stored during the 'save' procedure, and on power-up, the A-100 will revert to the default factory setting.



CONTROL ch 92 n

n :	0 to 127	LFO frequency

CONTROLLER #121 (All Controllers Off)

If this MIDI message is sent to the A-190, **LFO amount** will be set to 0 (although the LFO keeps running at the same frequency) and **portamento** is switched off.



CONTROL ch 121 n

n : 1 to 127

CONTROLLER #123 (All Notes Off)

If this MIDI message is sent to the A-190, the **gate** is turned off, and **all notes still in the A-190's memory** are cleared. Control voltages remain at the level at which they were last set.



CONTROL ch 123 n

n : 1 to 127

4.6 Initialisation (Reset)

When the A-190 is first switched on after leaving the factory, its memory is **initialised** - that is, all parameters are set to their **standard default values** (see the **table** on page 21).

You can always perform a **reset**, and return the A-190 to these **standard factory settings**. There are two forms of reset available:

a. Only the parameters marked **"★"** in the table are reset.

b. All the parameters in the table are reset.

For partial reset 'a', do the following:

❒ Switch the System A-100 off.

❒ Keep the menu button ② pressed, while turning the A-100 power back on.

The A-190 will **confirm the partial reset** by **flashing** all its LEDs (⑧) **slowly** for about five seconds.

For the full reset 'b', do the following:

❒ Switch the System A-100 off.

❒ Press and hold buttons ① to ④, while turning the A-100 power back on.

The A-190 will **confirm the full reset** by flashing all its LEDs ⑧ **slowly** for about five seconds, **then quickly** for another five seconds.

	Parameter	Value	Notes
★	CHANNEL	0	MIDI channel 1
	REF. NOTE	36	C3
	CLOCK TIME	1	clock frequency at output ❸ = MIDI clock frequency
	CLOCK POLARITY	0	positive: 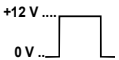
	RETRIGGER	0	legato - ie. no retrigger
	LFO FREQ.		c. 3 Hz
	GLIDE TIME	0	no portamento
	BEND WIDTH	12	1 octave
	ASSIGN CV2	0	velocity
	ASSIGN MODE	0	highest note
	SCALE		about ~1V/octave (not exactly! The 1V/oct scaling has to be re-adjusted after an initialisation !)
	REF. OFFSET		0 V
	GATE POLARITY	0	positive: 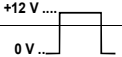
	RTRIG. TIME	4	4 milliseconds
	CV CHAR.	0	1 V / octave

CONFIG menu

No.	Parameter	Setting	Default
1	CHANNEL	NOTE ON **ch** n vel	1
	REF. NOTE	NOTE ON ch **n** vel	C3
	GATE POL.	pos.: PROG CHG **1** neg.: PROG CHG **2**	pos.
	CV CHAR.	V / octave: PROG CHG **3** Hz / V : PROG CHG **4**	V / Okt
	RETRIGGER	OFF: PROG CHG **5** ON: PROG CHG **6**	OFF
2	CLOCK TIME	PROG CHG **n** n = Divisor	1
	CLOCK POL.	pos.: PROG CHG **65** neg.: PROG CHG **66**	pos.
3	REF. OFFSET	INC / DEC	0 V
4	SCALE	INC / DEC	1.00
5	RETRIG. TIME	PROG CHG **n** RETRIG.TIME = n x 1 ms	4 ms
6	ASSIGN CV 2	0 Velocity (NOTE ON/OFF) 1 Program Change 2 Controller #n 3 Pitch Bend 4 Channel Aftertouch 5 Polyphonic Aftertouch choice of MIDI controllers	Velocity

PERFORMANCE menu

No.	Parameter	Setting	Default
1	CHANNEL	INC / DEC	1
2	LFO FREQ.	INC / DEC	~ 3 Hz
3	GLIDE TIME	PROG CHG **n** TIME= n x 20 ms	0 V
4	ASSIGN MODE	Last Note: PROG CHG **1** Highest Note: PROG CHG **2**	Highest
5	*ARPEG.*	*no function at present*	-
6	BEND WIDTH	Reference note: first NOTE ON Range note: second NOTE ON	1 Octave

MIDI controllers in PERFORMANCE mode

Controller	Effect	Setting
Cont **01** n	Modulation	n = LFO voltage amount sent to CV 1
Cont **05** n	Glide Time	Portam. Time = n x 20 ms
Cont **64** n	Sustain	n = 0 to 63 : Off n > 63 : On
Cont **65** n	Glide	n = 0 to 63 : Off n > 63 : On
Cont **68** n	Retrigger	n = 0 to 63 : Off n > 63 : On
Cont **92** n	LFO Freq.	n = LFO frequency (CV 1)
Cont **121** n	All Cont. Off	n can be any number. LFO modulation amount = 0, Glide off
Cont **123** n	All Notes Off	n canbe any number. All notes off, GATE off

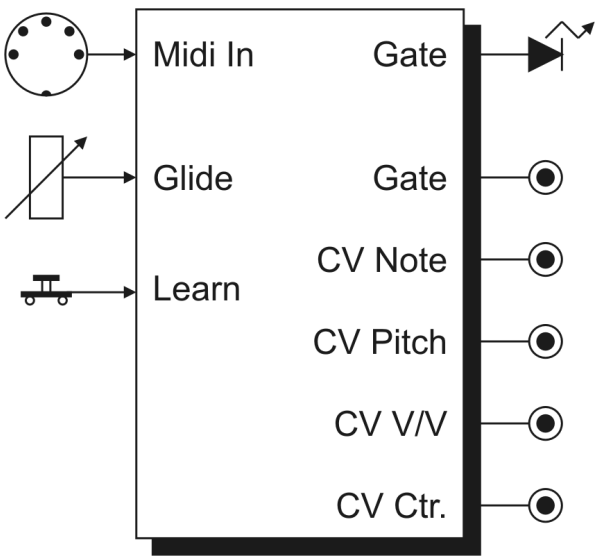

Fig. 1: Schematics

1. Introduction

Module A-190-2 is an economically priced alternative to the Midi-CV/SYNC interface A-190-1. It can be used in all cases where the additional features of the A-190-1 are not required (e.g. clock output, start/stop output). A-190-2 is the modular version of the MCV4 interface.

These are the most important features of the A-190-2:

- Midi-to-CV/Gate interface
- Gate output 0/+5V
- CV1: voltage derived from incoming Midi note messages (0...+5V / 5 octaves), the glide control affects this CV output
- CV2: voltage derived from incoming Midi pitch bend messages (-2.5 ... +2.5V)
- CV3: voltage derived from the multiplication of incoming Midi volume messages and the velocity data of the note messages (0...+5V)
- CV4: voltage derived from a freely adjustable Midi control change message (0...+5V)
- Midi channel, reference note for 0V CV1 and the midi control change number for CV4 are adjusted by means of the learn button.
- Glide control: portamento/slew limiter function for CV1

By means of two jumpers CV1 and Gate can be connected to the corresponding lines of the A-100 bus.

2. Overview

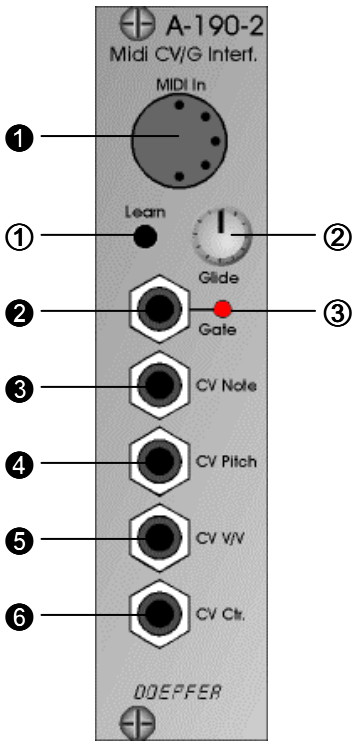

Fig. 2: Front panel

Controls / Displays:

① Learn:	Learn (momentary switch)
② Glide:	Glide Control for CV output "Note"
③ Gate:	Gate / Learn LED

In- / Outputs:

❶ Midi In:	Midi input
❷ Gate:	Gate output
❸ CV Note:	CV output "Note"
❹ CV Pitch:	CV output "Pitch Bend"
❺ CV V/V:	CV output "Velocity/Volume"
❻ CV Ctrl.:	CV output "Controller"

Width: 6 HP

Current: 50 mA

3. In- / Outputs

❶ Midi input

The Midi input of the A-190-2 is connected to the Midi output of the Midi transmitter that is used to control the A-190-2 (e.g. Midi keyboard or sequencer).

❷ Gate output

The Gate outputs turns "high" when a valid Midi note on message is recognized by the A-190-2. It turns back to "low" when the corresponding note off message occurs. The Gate levels are +5V (high state) and 0V (low state). If desired the gate polarity can be inverted. Details in chapter 5.

Usually the gate output is connected to the gate input of an envelope generator (e.g. ADSR A-140) that is used to control the VCA and/or VCF of the patch.

The A-190-2 has available a jumper that allows to connect the Gate output of the module to the Gate line of the A-100 bus (see appendix).

Important note: The module comes with an installed Gate jumper, i.e. one has to remove the jumper if e.g. an A-190-1 or A-185-1 is connected to the gate line of the same bus board! If the A-190-2 has to be used as Gate source for the A-100 bus the Gate connection of any other Gate source (e.g. A-190-1 or A-185-1) has to be removed. Otherwise a short circuit is made between the outputs of the Gate transmitters !

❸ CV output "Note" (CV1)

This socket outputs a voltage that is controlled by the Midi note number of a valid note on message (i.e. on the right Midi channel and in the note range between the reference note and 5 octaves beyond). The voltage range is 0 … +5V and the scale is 1V/Octave (i.e. 5 octaves range). 0V corresponds to the reference note (see chapter 5), +5V to the note that is 5 octaves beyond the reference note.

CV1 is affected by the glide control (see chapter 4).

A trimming potentiomer can be used to re-adjust the 1V/octave scaling if necessary (see attachment for details).

Usually this CV output is connected to the 1V/Oct compatible CV input(s) of the voltage controlled oscillator(s) (VCOs) of the patch. The output is buffered, i.e. it can be used to control even 2 or more CV inputs of VCOs without the need of an additional buffer.

The A-190-2 has a jumper on board the allows to connect the CV output "Note" of the module to CV line of the A-100 bus (see appendix).

Important note: The module comes with an installed CV jumper, i.e. one has to remove the jumper if e.g. an A-190, A-185-1 or A-185-2 is already connected to the CV line of the same bus board! If the A-190-2 should be used as CV source for the A-100 bus the CV connection of any other CV source (e.g. A-190-1, A-185-1 or A-185-2) has to be removed. Otherwise a short circuit is made between the outputs of the CV transmitters !

❹ CV output "Pitch Bend" (CV2)

This socket outputs a voltage that is controlled by valid Midi pitch bend messages (i.e. on the right Midi channel). The voltage range is about -2.5V (Midi data 0) … 0V (Midi data 64) … +2.5V (Midi data 127).
Usually this output is connected to the CV input(s) of the voltage controlled oscillators (VCOs) that are equipped with attenuators. The attenuators are used to adjust the desired pitch range. If more than one VCO is used a multiple module is required to distribute the CV coming from the A-190-2. In this case the usage of the precision adder A-185-2 is a more versatile solution (see chapter 6: user examples). The CV output "Note" of the A-190-2 is patched to one of the CV inputs of the A-185-2 without attenuator. The CV output "Pitch Bend" of the A-190-2 is patched to the CV input of the A-185-2 with attenuator. That way the pitch bend range is adjusted with one common control only for all VCOs. The CV bus jumper of the A-190-2 has to be removed in this application because the A-185-2 is used as CV source for the bus.

❺ CV output " Velocity/Volume" (CV3)

This socket outputs a voltage that is controlled by valid Midi volume or velocity*volume messages. The voltage range is 0 V (velocity/volume data 0) … +5V (velocity/volume data 127). The module can be adjusted for volume control only or for both volume and velocity (velocity*volume). Details in chapter 5. The factory setting is volume only (no velocity).

Usually this output is connected to the CV input of a voltage controlled amplifier (VCA) that is used to control the overall loudness of the patch. But it can be used also to control any other function by Midi volume or velocity (e.g. filter frequency, filter resonance, LFO frequency …) .

❻ CV output "Controller" (CV4)

This socket outputs a voltage that is controlled by valid Midi control change messages (i.e. the right control change number on the right Midi channel). The voltage range is 0 V (controller data 0) … +5V (controller data 127). The control change number can be adjusted to any value. Even this output can be connected with velocity (same as CV3). Details in chapter 5. The factory setting is controller #1, i.e. modulation controller, no velocity.

The output can be used to control any parameter by the corresponding Midi control change messages (e.g. modulation depth, filter frequency, wave multiplication depth, waveform morphing, panorama …).

4. Controls

① Learn

This is a momentary switch that is used to adjust the parameters of the A-190-2 in combination with Midi note, control change or program change messages (e.g. Midi channel, reference note, control change number, gate polarity, retrigger on/off, key assign mode). Details in chapter 5.

The learn button is also used to reset the module (i.e. to call up the factory settings). For this the button has to be operated during power on of the A-100 system. Then the system has to be turned off and on again (with about 10 seconds in the "off" state"). These are the factory settings:

- Midi channel 1
- reference note 36
- trigger polarity: positive
- retrigger: off
- CV3: volume (controller #7)
- CV4: modulation (controller #1)
- CV1 characteristics: V/octave
- key assign mode: highest note

② Glide

This is the glide control for the CV output "Note" (this function is even called *Portamento* or *Slew Limiting*). In the fully CCW position no glide appears, i.e. the control voltage jumps when a new Midi note number is recognized. To obtain the glide function the control has to be turned clockwise until the desired glide time is reached.

③ Gate/Learn

The LED (light emitting diode) displays the Gate function in the normal play mode. The LED can be used to control the correct function of the module – even without having other modules connected to A-190-2.

The LED is also used as *Learn* display after the *Learn* button has been operated. Details in chapter 5.

5. Operation

To adjust the A-190-2 parameters one has to enter the *Learn mode* and send the regarding Midi messages to the module from the Midi transmitter while the A-190-2 is in learn mode. To enter the learn mode one has to press the learn button and hold it pressed down for about one second. The one-second-delay was programmed to prevent the unintentional release of the learn mode. Whenever the LED is flashing without incoming Midi messages the learn mode is active. In this mode the A-190-2 is looking forward to an incoming Midi note on, program change or control change event (see table below). If one has entered the learn mode by mistake one can leave it by pressing the learn button again. The learn mode is also be terminated if one of the Midi events in the table below is received.

While the A-190-2 is in learn mode the parameters listed in the table on the next page can be adjusted via incoming Midi messages.

Whenever the A-190-2 receives one of the Midi messages listed in the table the parameter in question is changed and the A-190-2 returnes to the normal play mode, i.e. the LED stops flashing.

Pay attention that not unintentional Midi messages appear while beeing in the learn mode (e.g. from a sequencer) as you change the settings of the A-190-2 with such messages. All parameter changes made while beeing in the learn mode are stored non volatile parameter memory. When the A-190-2 is turned on next time the parameter settings are taken from this memory.

Function	Midi message	Note	Comment
Midi channel/reference for CV1=0V	Note on	(1)	
CV3 velocity off	Program Change #1	(2)	CV3=volume
CV3 velocity on	Program Change #2	(2)	CV3=volume*velocity
CV4 velocity off	Program Change #3	(2)	CV4=Ctr.#X
CV4 velocity on	Program Change #4	(2)	CV4=Ctr.#X*velocity
Retrigger: off	Program Change #5	(3)	
Retrigger: on	Program Change #6	(3)	
Trigger polarity: normal	Program Change #7	(4)	
Trigger polarity: invertet	Program Change #8	(4)	
CV3 velocity mode 127 steps	Program Change #11	(5)	velocity resolution 0-127
CV3 velocity mode 2 steps	Program Change #12	(5)	velocity 2 steps (</>100)
CV4 velocity mode 127 steps	Program Change #13	(5)	velocity resolution 0-127
CV4 velocity mode 2 steps	Program Change #14	(5)	velocity 2 steps (</>100)
Key assign mode: highest note	Program Change #15	(6)	
Key assign mode: last note	Program Change #16	(6)	
Key assign mode: reference note	Program Change #17	(6)	
Key assign mode: stack note	Program Change #18	(6)	
Characteristics: V/Octave	*Program Change #19*	*(7)*	
Characteristics: Hz/V	*Program Change #20*	*(7)*	
Controller for CV4	any Midi-Controller (except Bank-Controller 0/32)	(8)	

Notes

(1) Midi channel/reference for CV1=0V

In case of an incoming note event in the learn mode the note number and the channel of the event are taken over as the new reference note and Midi channel. The reference note is the Midi note number that belongs to 0V CV1 output. In practice you simply enter the learn mode and press the key on your Midi keyboard that should belong to 0V CV1. Midi note events below the reference note or more than 5 octaves above the reference note are ignored (remember: the CV1 voltage range is 0...+5V). The factory default settings of reference note and Midi channel are 36 (C) and 1.

(2)...(6)

For the setting of these parameters Midi Program Change messages coming from your Midi device are used. Normally you will have to press the program change keys on your Midi keyboard or synthesizer or software while beeing in the learn mode.

Important note: Pay attention that some manufacturers count the Midi program change numbers from 1....128, others from 0...127. In this manual the counting 1…128 is used. Please look into the user's manual of your Midi device which type of counting is used. If the counting type 0…127 is used one has to subtract 1 from the program change numbers in the table above. For some devices (especially software sequencers) the type of program change numbering can be selected. In this case you should use the 1...128 range to agree with the numbers in the table above.

The program change messages must be sent on the A-190-2 Midi channel (see note 1).

(2) Velocity on/off

These program change messages are used to select whether the note on velocity affects the control voltages CV3 and CV4. If velocity is "off" only volume (CV3) or the free adjustable controller (CV4) is used to generate the control voltage. If velocity is "on" the volume or controller value is multiplied with the note on velocity, i.e. the CV value changes with every new note event as the velocity of the note event is used to calculate the control voltage together with the volume message (CV3) or the assignable controller (CV4).

(3) Retrigger on/off

With this parameter one can select whether the gate is reset for a few milliseconds when playing *legato* (i.e. playing a new note on the keyboard while the key of the former note is still pressed). The factory default setting is retrigger off. Additionally the Midi controllers LEGATO (controller #68) and SUSTAIN (controller #64) affect the gate output in the usual manner.

(4) Gate polarity

With this function the gate polarity can be changed. Within the A-100 this features is not required because all envelope generators of the A-100 use positive gate polarity only. Only if the A-190-2 is used to control other equipment or for special features this function might be useful.

(5) Velocity resolution

This parameter defines whether the velocity resolution is 127 steps (as usual) or two steps only. The two-step-mode is similiar to the *accent* used in some vintage equipment (e.g. TB303, TR808) and could make sense to simulate one of these devices.

The velocity threshold value for the two-step-mode is 100: incoming velocity values of 100 or more are converted into a fixed velocity value 127, incoming velocity values less than 100 are converted into a fixed velocity value 64.

(6) CV1 Key assign modes

These program change messages adjust the type of assign modes for CV1. If *highest note* is selected the highest key pressed on the midi keyboard is used to generate CV1 if more than one key is operated. In the *last note* mode always the last note (chronological) is taken for CV1.

The following modes are only useful if two or more A-190-2 are daisy-chained via Midi Out/In by means of the internal jumpers (see attachment).

Reference note means that only the reference note is accepted. This feature is useful if you want to trigger different devices on the same Midi channel using two or more A-190-2. In this case you have to set the reference notes for the A-190-2's to different values.

Stack note means that the A-190-2 is filtering out the note event that is used by the A-190-2 to generate Gate and CV1. The note event in question is not transmitted to the Midi output. All other note events are passed on. Stack mode is used to control more than one synthesizer voice on one Midi channel and enables polyphonic control.

(7) CV Characteristics

With programm change #19 and #20 one can select between V/Octave and Hz/V characteristics for the CV1 output. Within the A-100 this features is not required because all VCOs and VCFs use V/Oct only. Only if the A-190-2 is used to control other equipment this function might be useful. V/Octave is used by most of the synthesizer manufacturers (Moog, ARP, Oberheim, Roland, Sequential Circuits, Doepfer). Because of the non linear voltage range mode the resolution is very poor in the Hz/V mode, especially in the lower voltage range. Consequently the Hz/V mode should be treated as a free bonus and used only if there is no other solution.

(8) Control change number for CV4

If the A-190-2 receives a Midi control change message (except bank controllers 0 and 32) while being in the learn mode the control change number of this message defines the new control change number for CV4 (except bank controllers 0 and 32). I.e. the CV4 output of the A-190-2 corresponds from now on to this controller number. The control change message must be sent on the A-190-2 Midi channel (see note 1).

Temporary parameter changes

The program change messages listed in the table can be used to change the settings even temporarily without the need to select the learn mode. *Temporarily* means that the changes are not stored permanently in the non-volatile parameter memory but only as long as the module is powered. If the A-190-2 is turned off and on the previously stored parameter settings are called up again.

The temporary changes may be used to try out different settings without storing them into the memory or to change the settings temporarily from a Midi foot-switch or sequencer (e.g. retrigger on/off for, assign mode change). If the parameter changes have to be stored permanently the learn mode has to be used.

All program change messages must be sent on the A-190-2 Midi channel (see remark 1).

6. User Examples

6.1. Simple synthesizer standard patch with one envelope generator

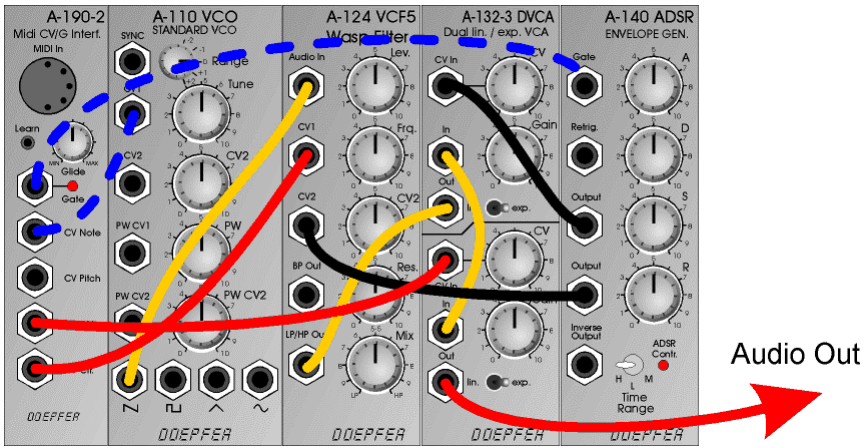

This is a simple synthesizer patch with one VCO A-110 that is processed by a VCF (A-124 Wasp filter in this example, but any other filter may be used) and two VCAs (Dual VCA A-132-3). The first VCA is controlled by the envelope of the ADSR A-140. The second VCA is controlled by the Velocity/Volume CV of the A-190-2 and used for a Midi controlled overall loudness. The VCF frequency is controlled by both the A-140 envelope (width adjustable level) and the Midi generated Controller CV (fixed level). The dashed blue connections (CV1 A-190-2 → CV1 In A-110 and Gate A-190-2 → Gate In A-140) are not required if the bus jumpers of the modules A-110, A-140 and A-190-2 are installed.

6.2. Application of A-190-2 and Precision Adder A-185-2

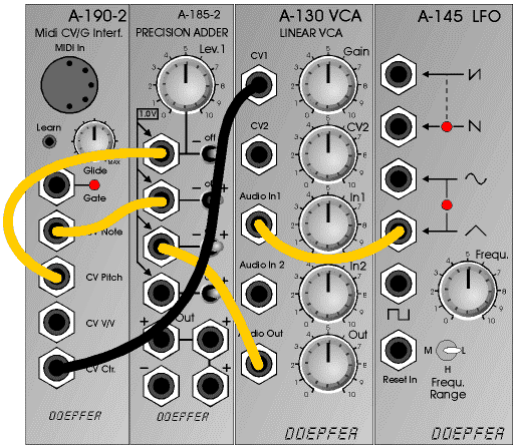

In this application the A-185-2 is used to add up several voltages that are used to control the pitch of all VCOs that are connected to the same bus board as the A-185-2:

- CV Note is connected to one of the inputs of the A-185-2 without attenuator
- CV Pitch Bend is connected to the input of the A-185-2 with attenuator to be able to adjust the pitch bend width
- CV Ctr is connected to the control input of a VCA (e.g. A-130) and controls the level of the triangle signal of the LFO A-145. The output of the VCA is connected to one of the inputs of the A-185-2 without attenuator. That way the Midi controller (e.g. modulation = control change #1) is used for the modulation depth. If the A-145 is replaced by a VCLFO A-147 the CV Volume of the A-190-2 may be used to control even the modulation frequency of the LFO.
- The CV output of a sequencer A-155 can be connected to the remaining free input of the A-185-2. Then the CV Note of the A-190-2 is used to transpose the sequence of the A-155 via Midi.

Attention: In this application the bus CV jumper of the A-190-2 has to be removed and the bus CV jumper of the A-185-2 has to be installed ! Otherwise a short circuit between both CV outputs is made !

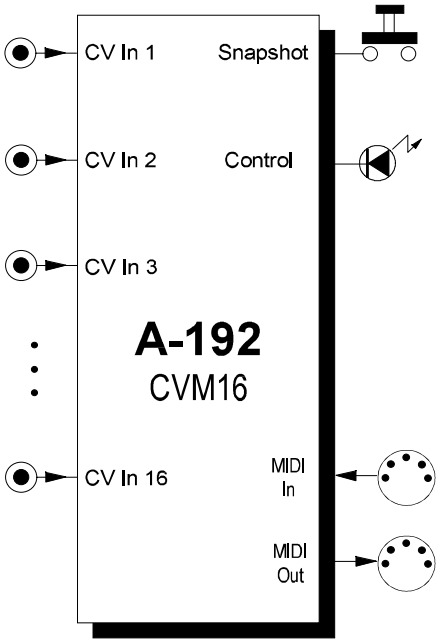

1. Introduction

Module **A-192** is a **CV-to-MIDI interface** that converts 16 control voltages in the range 0...+5V into 16 MIDI control change messages. A-192 is the modular version of **Pocket Control** with the 16 rotary controls replaced by 16 miniature jack sockets to process any control voltage instead of the manually generated MIDI control changes of Pocket Control.

MIDI messages appearing the **MIDI Input** are **merged** to the MIDI controller messages generated by the A-192.

128 different assignments (**Preset**s) of the 16 CV inputs to MIDI controller messages are available. Switching between the 128 presets takes place with an **8-pin DIP switch** on the pc board (permanently) or via incoming MIDI **program change messages** (temporarily). If none of the 128 factory presets is suitable **new presets** can be **programmed** with the Pocket Control **editor program** which is available for free on our web site www.doepfer.com.

The **snapshot** button transmits the 16 momentary states of the 16 inputs as MIDI controller messages.

2. Overview

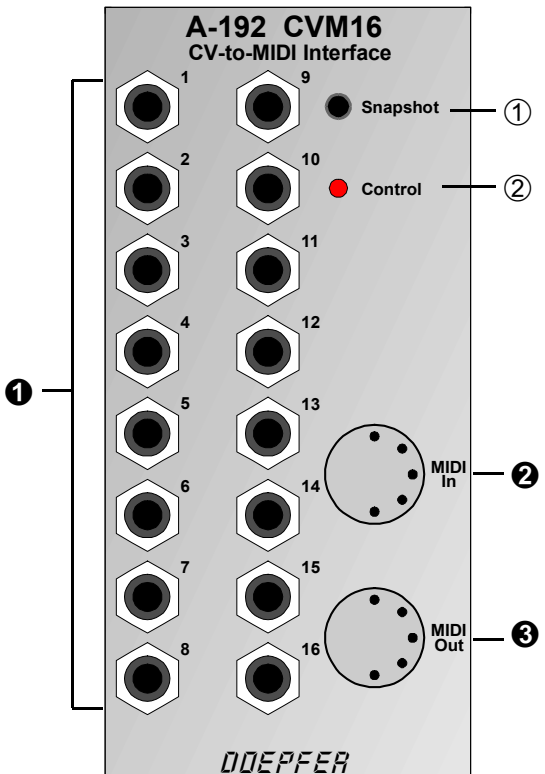

Controls and indicators

① **Snapshot** : Momentary switch (sends a snapshot of all the momentary CV settings)

② **Control**: LED display

(- DIP switch: 8 pin switch on the A-192 pc board to select a preset, not shown)

In- / Outputs:

❶ **Sockets** : 16 CV inputs (range 0...+5V)

❷ **MIDI In** : MIDI input

❸ **MIDI Out** : MIDI output

3. Basics

Module A-192 converts up to 16 analog control voltages (CV) in the voltage range 0...+5V into 16 **MIDI controllers** (exactly: MIDI control change messages). The MIDI channel for each controller can be selected (1-16). E.g. 16 different controllers on the same MIDI channel may be chosen, or even the same controller number on different MIDI channels. All mixtures of controller numbers and MIDI channels are possible. The term *controller* is not quite correct as A-192 even supports similar messages like **after touch** or **pitch bend**, as well as most of the common **RPN** resp. **NRPN** controllers and most of the **GS, XG controllers** resp. **XG sysex messages**.

The **active input voltage range** is **0...+5V**. Negative voltages and voltages above +5V are not converted. A protection circuit on each input prevents the damage of the module as long as the voltages applied to the inputs are in the range of -12V...+12V. This means that within the A-100 system it is not possible to damage the A-192 module as the output voltages of all A-100 modules are within these limits.

If negative voltages (e.g. from a LFO) or voltages above +5V (e.g. from an ADSR) are to be converted an attenuator / offset generator module (A-129/3) has to be inserted between the voltage and the A-192 input. The A-129/3 enables the addition of a positive voltage and the attenuation of the input voltage so that the output (= input of A-192) is in the required range of 0...+5V.

The assignments of the 16 CV inputs to MIDI controllers and channels is defined in **128 presets**. A preset is selected *permanently* with an **8-pin DIP switch** on the pc board or *temporarily* via incoming MIDI **program change messages** on the MIDI master channel.

You will find a table of all factory presets with the corresponding DIP switch settings in the appendix of this manual. If none of the factory presets is suitable for your application you may program one or more new presets with the **editor program** which is available for free on our web site www.doepfer.com. (same as editor program for **Pocket Control**). The program runs on a PC under Windows 95/98/2000.

For a small extra charge (about US$10.00) we also have available the OEM version of **Emagic's Sounddiver** (universal editor program) suitable for both PC and Mac.

As soon as one of the 16 input CVs changes the corresponding MIDI controller messages is generated. In case of a continually changing voltage (e.g. from a LFO or Theremin) the corresponding MIDI controller is transmitted permanently. In case of a static voltage (e.g. from CV source A-176) the single transmission of all 16 MIDI controllers can be triggered with the **snapshot** button.

Unused inputs are connected to GND (= 0V) by means of the switching contacts of the CV sockets (sockets are “normalled to GND”). This means that an unused input will generate no MIDI data as long as no plug is inserted into the corresponding CV socket (and the snapshot button is not operated). Please avoid to connect a patch cord into a CV socket with the second side left open. In this case the switching contact does no longer connect the CV input to GND and random MIDI data are generated for this CV input.

The 16 analog inputs are internally converted into digital data by means of an 8-bit analog-to-digital converter (ADC). Because of the MIDI data format only 7 bits are used (**MIDI data range 0...127**).

4. Controls and indicators

① Snapshot

The Snapshot switch has various functions:

- to send a Snapshot of all the current CV settings
- for setting the master MIDI channel
- to reset the A-192 after an overflow at the MIDI in

The switch is a remnant of **Pocket Control** which is equipped with 16 (static) rotary potentiometers. The switch is normally not required for A-192 operation. Especially the snapshot function (item 1 in the list above) is normally not necessary because the input voltages of A-192 usually change permanenty and thus the MIDI data are generated permanently.

Generating a Snapshot:

The snapshot function is not achieved by just pressing the snapshot switch, as this could be accidentally pressed too easily. So to activate the Snapshot function, **first briefly press** the Snapshot switch **once**, this causes the **LED** to **flash**, the Snapshot switch needs to be **pressed again within at least one second** (whilst the LED is still flashing). This then invokes the snapshot function, and the data from all 16 control knobs is transmitted from the A-192.

The snapshot switch may even be used to set the **MIDI master channel**. This is not as simple as for Pocket Control because of the missing 16 potentiometers (remember: the switch is a remnant of Pocket Control):

To set the Master channel, hold the snapshot switch down for at least one second and keep it held down, the LED then stays on to indicate Master channel setting mode (do not let go of the button until the required value has been selected). In this mode the CV inputs become channel selectors, and do not transmit the normal control data. To select a channel, the input voltage change on one input is necessary while the other 15 voltages remain unchanged (e.g. to set channel 5, the voltage of CV input 5 has to be changed). If you accidentally changed the wrong voltage, just change the correct one, as it is the last voltage change that determines the actual Master channel set.
In practice all plugs are removed except the one plug that defines the MIDI master channel. On this plug now a changing voltage has to appear.
The master channel is stored non-volatile in the module even during power off.
We know that this way of setting the master channel is not very comfortable but this function is a remnant of Pocket Control. In practice this step has to be carried out only once and is not necessary if the editor program is used.

To **clear any MIDI input error** such as a MIDI overflow (too much data in one go), press the snapshot switch briefly once (do not press it again until at least one second has passed, or this would enter the snapshot mode). For details please refer to the next chapter.

② Control

The LED ② indicates the **status in various modes**. Under normal operation the LED indicates **MIDI input activity**, and also **MIDI output activity** when input voltages are converted into MIDI data. The LED also indicates:

- **Power on reset** - the LED will stay lit for around one second when the power is first applied.
- Any **error** at the **MIDI input** (MIDI overflow) - the LED turns on permanently
- **Data and status** when setting the **Master channel** (see ① snapshot)
- The **status** of the **Snapshot** function (see ① snapshot)
- Indication that a preset has been changed

Typical reasons for a MIDI overflow are too much MIDI data (e.g. MIDI output of a computer sequencer with many active tracks/channels) or Sysex data sent too fast to the module. In both cases wrong MIDI data may be sent to the MIDI output of the module.

5. In- / Outputs

❶ CV Inputs 1 ... 16

The 16 sockets ❶ are the **control voltage inputs** of the CV-to-MIDI interface. The control voltages to be converted into MIDI data are connected to these sockets. The active voltage range for each input is 0...+5V. 0V corresponds to MIDI data 0, +5V to 127. The conversion is linear (i.e. +2.5V corresponds to about 63/64 MIDI data).

The module is working reliable as long as the input voltages are within the limits 5V...+12V but only the range 0...+5V is converted into MIDI data. Voltages less than -5V may cause faulty MIDI data. The protection circuit on each input prevents a damage of the module as long as the voltages applied to the inputs are in the range of -12V...+12V. Voltages more than +12V or less than -12V may damage the module. Within the A-100 system it is not possible to damage the module as no voltages beyond these limits are generated within the A-100 system.

An attenuator/offset module A-129/3 should be used to convert voltages beyond the range 0...+5V into the active range 0...+5V.

❷ MIDI In

The **MIDI In** socket ❷ has 3 different functions:

- MIDI data from another MIDI device may be transmitted to the A-192 and merged with the MIDI data generated by the A-192 (e.g. the MIDI output of a keyboard).
- The MIDI input is required if an **editor program** is used to change presets in the A-192 or to progam new ones. Please refer to the manual of the editor program for details. An editor program for PC is available for free download on our web site www.doepfer.com (same as Pocket Control editor).
- An incoming **program change message** on the MIDI master channel selects one of the 128 presets. This selection is only temporarily, i.e. the new preset is active only until the next power off. During power on the preset defined by the DIP switch setting is selected. The selection of a new preset via program change is indicated by lighting up of the LED for about one second. During this period no incoming MIDI data is recognized (i.e. no MIDI merging, no program change recognition).

If none of these applications is used the MIDI in socket remains unconnected.

❸ MIDI Out

This is the **MIDI Out socket**. It is connected to the MIDI input of the device controlled by the MIDI data of the A-192 (e.g. computer sequencer, expander, keyboard, MIDI-toCV converter and so on).

6. User Examples

Module A-192 can be used to convert any control voltage in the A-100 into MIDI controllers. Especially those applications normally not available in the world of MIDI are the most interesting ones. Of course one may convert a (slowly oscillating) LFO or ADSR into MIDI. But more interesting are e.g. those applications:

- **Theremin-to-MIDI (A-178 ➔ A-192)**
- **Light-to-MIDI (A-179 ➔ A-192)**
- **Envelope-to-MIDI (A-119 Envelope ➔ A-192)**
- **Sequencer-to-MIDI (A-155 ➔ A-192)**
- **Footcontroller-to-MIDI (A-177 ➔ A-192)**

Vocoder MIDI interface

Another very important application of the A-192 is the "MIDI-fication" of the vocoder modules A-129/x. For this the outputs of the vocoder analysis module A-129/1 is connected to the A-192 inputs. The A-192 converts the 15 analysis voltages into 15 MIDI controllers. The 16th input may be used for voiced/unvoiced control or as control voltage for the slew limiter.
The MIDI data generated by the A-192 may be recorded and stored with a computer sequencer. Dependent on the power of the sequencer different possibilities are coming up:

- Recording and playing back the recorded "vocoder sequence" (MIDI controllers) at different at speeds
- "Freezing" at a certain position (e.g. a vowel like "a")
- Storing certain vowels or filter settings
- Realtime display of the controllers like a spectrum analyser

The conversion of the recorded MIDI controllers back into control voltages may be performed with a special version of the MIDI-to-CV converter A-191. A modified version that responds to 16 MIDI controllers is required (i.e. without LFO, after touch and pitch bend). The first 15 CV outputs are connected to the CV inputs of the vocoder synthesis section A-129/2. The 16th CV output may be used for voiced/invoiced control (i.e. controlling a VC switch) or as control voltage for the slew limiter controller A-129/4.

7. Patch-Sheet

The following diagrams of the module can help you recall your own **Patches**. They're designed so that a complete 19" rack of modules will fit onto an A4 sheet of paper.

Photocopy this page, and cut out the pictures of this and your other modules. You can then stick them onto another piece of paper, and create a diagram of your own system.

Make multiple copies of your composite diagram, and use them for remembering good patches and set-ups.

- Draw in patchleads with colored pens.
- Draw or write control settings in the little white circles.

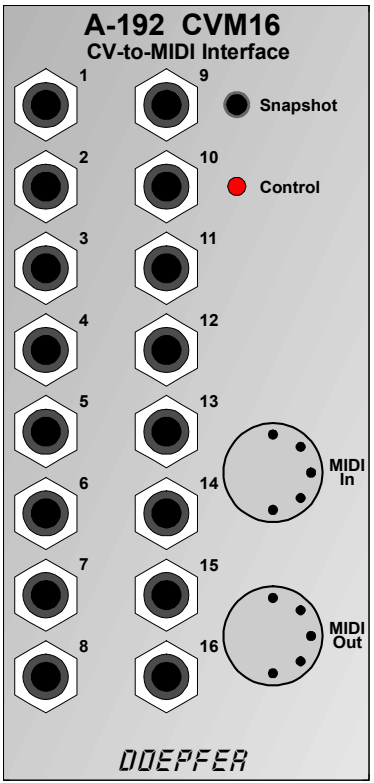

Appendix:
Selecting a Preset with the DIP switch

On the A-192 main board an DIP switch with 8 single switches is located near the LED behind the sockets no. 10 and 11. This switch is used to select one of the 128 presets after power on. As 8 switches could address 256 presets the eighth switch is unused. Its setting has no meaning so far.

The least significant switch (labelled “1” in the table on the following page) is located below in direction to the MIDI sockets. The most significant switch (labelled “8” in the table) is located above near the LED.

A closed switch (position “ON”) corresponds to a “1” in the table on the following page. An open switch (position “OFF”) corresponds to “0”.

The empty presets from no. 65 are not used while this manual is written. But they may be in use when you receive the module. On our web site www.doepfer.com you will find the current state of all presets (same as for Pocket Control).

Additionally a preset can be selected temporarily with a MIDI program change message on the master channel (see chapter 5 / MIDI In).

The term ***Masterchn*** means that the MIDI data are transmitted on the MIDI master channel (see page 5 concerning the master channel).

More detailed information about the presets you may find on our web site **www.doepfer.com** in the product description and user’s manual of **Pocket Control**. In this manual the presets are described a little bit more detailed. A-192 is identical to Pocket Control if one replaces the 16 rotary potentiometers (generating 0...+5V) by the 16 input sockets of A-192 in the product description and user’s manual.

For the A-192 probably one of the more general presets 0...15 is the best choice. E.g. presets no. 8 (MIDI controllers 0...15 on the master channel) or preset no. 9 (MIDI controllers 16...31 on the master channel).

12345678	Preset #: preset name	12345678	Preset #: preset name
00000000	**Preset 0: Volume Channel 1 - 16**	00000100	Preset 32: XG Level Chn 1 - 16
10000000	**Preset 1: Panorama Channel 1-16**	10000100	Preset 33: XG Pan Chn 1 - 16
01000000	**Preset 2: Cutoff Channel 1-16**	01000100	Preset 34: XG Reverb Chn 1 - 16
11000000	**Preset 3: Resonance Chan. 1-16**	11000100	Preset 35: XG Chorus Chn 1 - 16
00100000	**Preset 4: Volume/Pan Ch.1 - 8**	00100100	Preset 36: XG Dry Chn 1 - 16
10100000	**Preset 5: Volume/Pan Ch.9 - 16**	10100100	Preset 37: XG Var Chn 1 - 16
01100000	**Preset 6: Cutoff/Reson. Ch.1-8**	01100100	Preset 38: XG Low EQ Gain Chn 1 - 16
11100000	**Preset 7: Cutoff/Reson. Ch.9-16**	11100100	Preset 39: XG Low EQ Chn 1 - 16
00010000	**Preset 8: Ctrl 0-15 Masterchn**	00010100	Preset 40: XG High EQ Gain Chn 1 - 16
10010000	**Preset 9: Ctrl 16-31 Masterchn**	10010100	Preset 41: XG High EQ Chn 1 - 16
01010000	**Preset 10: Ctrl 32-47 Masterchn**	01010100	Preset 42: XG Mpart-Effect Masterchn
11010000	**Preset 11: Ctrl 48-63 Masterchn**	11010100	Preset 43: XG Level AD1/2,W1-12
00110000	**Preset 12: Ctrl 64-79 Masterchn**	00110100	Preset 44: XG Pan AD1/2,W1-12
10110000	**Preset 13: Ctrl 80-95 Masterchn**	10110100	Preset 45: XG Reverb AD1/2,W1-12
01110000	**Preset 14: Ctrl 96-111 Masterchn**	01110100	Preset 46: XG Chorus AD1/2,W1-12
11110000	**Preset 15: Ctrl 112-127 Masterchn**	11110100	Preset 47: XG Var AD1/2,W1-12
00001000	Preset 16: GS/XG Masterchn	00001100	Preset 48: XG Dry AD1/2,W1-12
10001000	Preset 17: AWE/SB 1 Masterchn	10001100	Preset 49: XG EQ
01001000	Preset 18: AWE/SB 2 Masterchn	01001100	Preset 50: XG Reverb
11001000	Preset 19: AWE/SB 3 Masterchn	11001100	Preset 51: XG Chorus
00101000	Preset 20: AWE/SB 4 Masterchn	00101100	Preset 52: XG Variation
10101000	Preset 21: AWE/SB 5 Masterchn	10101100	Preset 53: XG Insertion 1
01101000	Preset 22: GS/XG Drum Pitch	01101100	Preset 54: XG Insertion 2
11101000	Preset 23: GS/XG Drum Level	11101100	Preset 55: GS Reverb/Chorus
00011000	Preset 24: GS/XG Drum Pan	00011100	Preset 56: Strings
10011000	Preset 25: GS/XG Drum Reverb	10011100	Preset 57: Rebirth Mchn
01011000	Preset 26: GS/XG Drum Chorus	01011100	Preset 58: CS1x Masterchn
11011000	Preset 27: GS/XG Drum Delay/Var	11011100	Preset 59: Waldorf Pulse Mchn
00111000	Preset 28: XG Drum Cutoff	00111100	Preset 60: ASR-X Masterchn
10111000	Preset 29: XG Drum Reson.	10111100	Preset 61: Doepfer MAQ 1 Mchn
01111000	Preset 30: XG Drum Attack	01111100	Preset 62: Doepfer MAQ 2 Mchn
11111000	Preset 31: XG Drum Decay	11111100	Preset 63: K5000 MCB10 Mchn

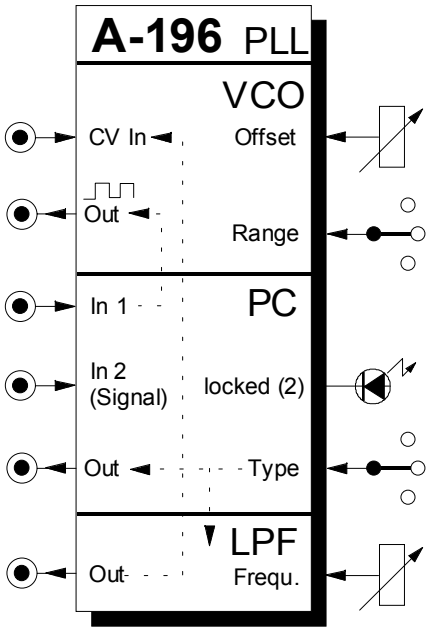

1. Introduction

Module A-196 contains a so-called **Phase Locked Loop** circuit (**PLL**). A PLL consists of three parts: **VCO** (linear voltage-controlled oscillator with rectangle output), **phase comparator** (PC), and **low-pass filter** (LPF). The three parts are connected in the A-196 with normalled sockets to form the standard closed-loop PLL frequency-feedback system. The normalled sockets allow individual access to each part of the PLL and enable other patches than the standard PLL (e.g. insertion of external modules).

The **VCO** is equipped with the controls **Range** and **Offset**. The range switch is used to select one of three frequency ranges. The Offset control defines the maximum frequency of the VCO.

The module contains three **different types of phase comparators** that are selected with a 3-position switch.

The **LED** indicates if the PLL is locked for PC2 , i.e. if the frequency of the internal VCO is the same as the frequency of the external input signal.

The frequency of the built-in **low pass filter** is manually adjusted with the **frequency control.**

2. Basic principles

The three units **VCO**, phase comparator (**PC**) and low pass filter (**LP**) form a standard closed-loop frequency-feedback system: The **VCO** output (linear response, rectangle output) is **compared** with an **external signal** (e.g. A-110 VCO) in the **PC**. The PC output is a digital high/low signal that indicates if the frequency resp. phase difference of the two input signals is negative, zero or positive. This signal is processed by the **LP** to generate a **smooth control voltage** that **controls** the **frequency** of the **VCO**. The units VCO, PC and LPF form a **frequency feedback loop** that works like this: The CV (LP output) increases (decreases) as long as the external frequency is higher (lower) than the frequency of the internal VCO and stops increasing as soon as both frequencies become identical.

But there are some stumbling blocks: **Different types of phase comparators** with advantages and disadvantages can be made. Some phase comparators e.g. even lock at harmonics, i.e. if the two frequencies to be compared are integer multiples. For some applications this "fault" may be used to create interesting effects. The A-196 contains 3 different types of phase comparators: PC1 is a simple exclusive OR, that even locks at harmonics. PC2 is a so-called RS flipflop and PC3 a more complex digital memory network. The user can select one of the three phase comparators with a 3-position switch. When PC2 is used a LED displays the "locked" state, i.e. when the frequency of the internal VCO is identical to the external frequency.

Special attention has also to be directed to the **frequency of the LP**. To obtain a smooth control voltage for the VCO the frequency of the LP has to be much smaller than the lowest frequency of the internal or external audio signal. Otherwise the frequency of the internal VCO will jitter or wobble around the correct frequency. But for special effects this frequency jitter can be used intentionally.

Example: frequencies in the range 50Hz...1kHz have to be processed with the PLL. Therefore the frequency of the LP has to be about 10Hz or even less. Such a low frequency of the LPF causes a noticeable slew of the internal VCO. When the frequency of the external signal jumps e.g. between 50Hz and 1kHz it takes about 0.1 second until the internal VCO reaches the new frequency (like portamento). Consequently one has to find a compromise between the frequency jitter and portamento. But these remarks are valid only for the "ideal" working PLL. As the A-196 is used in a musical enviroment these "problems" and "disadvantages" with jitter and slew time lead to additional musical applications like portamento effects, wobbling frequencies or harmonic locking according to the type of frequency comparator and time constant of the PLL low pass filter.

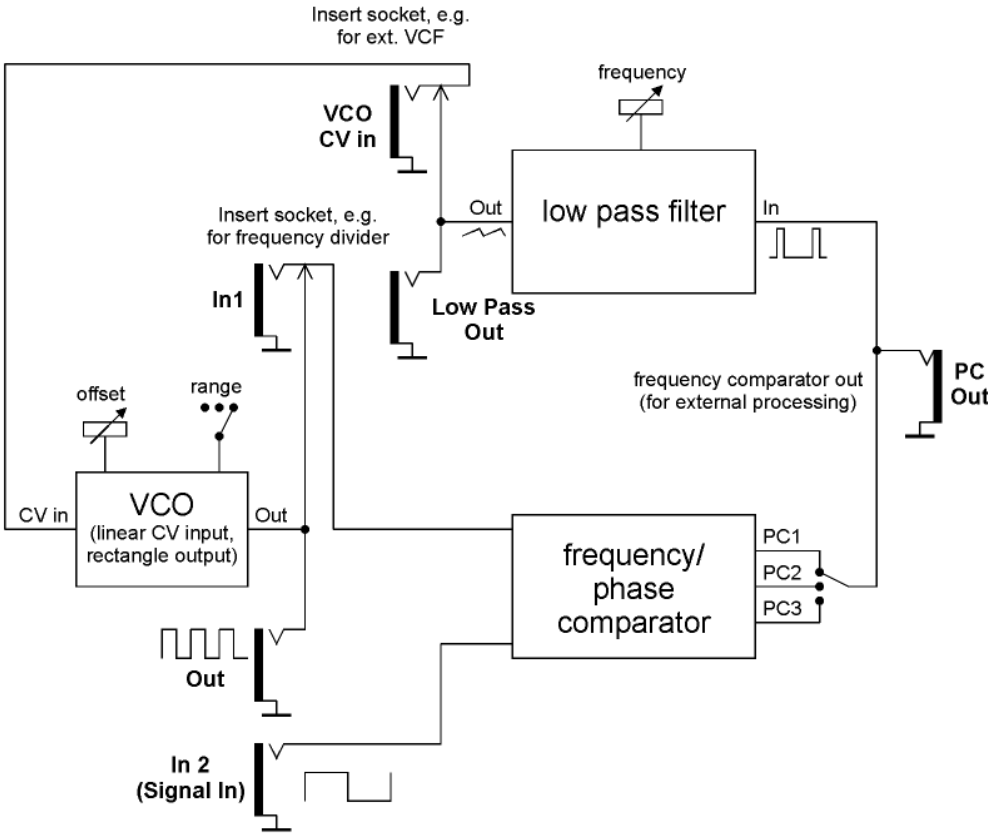

Fig. 1: Internal construction of the A-196

3. Overview

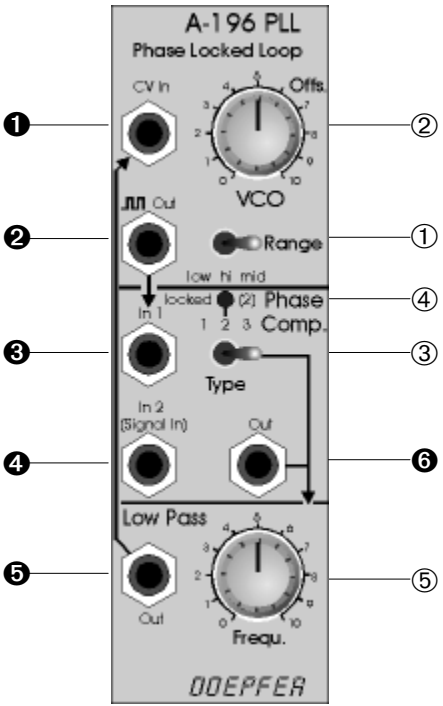

Controls:

① **Range** : Three-position frequency range switch for the VCO

② **Offs.** : Frequency offset control

③ **Type** : Three-position switch to select one of the three phase comparators

④ **LED** : lock display for PC2

⑤ **Frequ.**: Frequency control of the low pass filter

In- / Outputs:

❶ **CV In** : Control voltage input of the VCO, internally normalled to socket ❺

❷ **Out** : VCO output (rectangle), internally normalled to socket ❸

❸ **In 1** : Signal input 1 of the PC, internally normalled to socket ❷

❹ **In 2** : Signal input 2 of the PC for external signal

❺ **Out** : Low pass filter output

❻ **Out** : PC output, internally connected to the low pass filter input

4. Controls

① Range • ② Offs.

The **frequency range** of the internal **VCO** is selected with the **switch** ①.

Control ② is used to adjust the frequency **offset**, i.e. the **maximum frequency** within the range selected with the switch ①. The table shows the VCO frequencies obtainable with different settings of range and offset (with a control voltage ~ 0...+5V at input ❶).

Range	Offset = 0	Offset = 5	Offset = 10
low	2 Hz - 50 Hz	2 Hz - 200 Hz	2 Hz - 1 kHz
mid	20 Hz - 500 Hz	20 Hz - 2 kHz	20 Hz - 10 kHz
high	200 Hz - 5 kHz	200 Hz - 20 kHz	100 Hz - 100 KHz

③ Type

The **type of Phase Comparator (PC)** is selected with this switch. Three PC types are available:

- **PC 1** Exclusive or gate (Exor)
- **PC 2** RS Flipflop
- **PC 3** more complex digital network

Each phase comparator has its special advantages and disadvantages. E.g. PC1 locks even at harmonics, i.e. integer frequency multiples of the external signal and the internal VCO. This is a disadvantage for the standard PLL idea but may be useful for certain musical effects. One has to find the most suitable PC for each application.

④ LED

This LED lights up if the PLL is **locked** for **PC2**, i.e. if the frequency of the external signal is identical to the frequency of the internal VCO.

⑤ Frequ.

This control is used to adjust the **frequency** of the internal low pass filter.

The internal LP can be replaced by an external LP. The external LP has to be DC coupled and work even at very low frequencies (some Hz range)! Consequenctly normal audio VCFs are not suitable. The VC slew limiter A-171 can be used instead. The "raw" PC output ❻ or the pre-filtered output ❺ can be used as input for the external filter/slew limiter. In this case the output of the external filter/slew limiter is used as control input ❶ for the VCO.

5. In- / Outputs

❶ CV In

This socket is the control voltage input of the internal VCO. The socket is normalled to the internal filter output, i.e. the CV for the VCO comes from the filter output provided that no plug is inserted into socket ❶.



The VCO of the A-196 can be used as a simple **rectangle VCO with linear control response**. To control the VCO frequency a suitable voltage has to be fed into socket ❶. To obtain scale and offset control an A-129-3 or A-167 can be used.

❷ Out

Socket ❷ is the VCO output signal (**rectangle waveform)**. Internally this signal is connected to input 1 of the phase comparator.

❸ In 1

This socket is input 1 of the **phase comparator**. The socket is normalled to the internal VCO output ❷, i.e. input 1 of the PC comes from the internal VCO provided that no plug is inserted into socket ❸.

❹ In 2 (Signal In)

This socket is the second signal input of the PC. The **external PLL signal input** (e.g. VCO A-110 or frequency divider A-163) is connected to this socket.

❻ Out

This socket is the output of the currently selected **phase comparator** (selected with switch ④). It is a digital signal (high/low/tri state) that is internally connected to the low pass filter input. This output can be used to process the PC signal with external modules (e.g. VC slew limiter A-171). The processing modules have to be DC coupled as sub-audio frequencies have to be processed ! Only for special effects even AC-coupled modules (e.g. normal audio filter) may be used.

❺ Out

This socket is the **low pass filter output**. The socket is internally connected to the control input of the the VCO via the normalling socket ❶. The same notes as in the preceeding paragraph are valid. But the PC output is already pre-filtered with the internal low pass. A combination of the internal low pass and an external processing module (e.g. A-171) can be used to generate the desired VCO control voltage.

6. User examples

Frequency Multiplication

A very important application of the A-196 is **frequency multiplication.** For this the output of the internal VCO is connected to the input of an external frequency divider (e.g. the VC frequency divider A-163 or the A-160). The output of the divider is connected to input ❸ of the phase comparator (see fig. 2). By this the internal VCO oscillates at a multiple of the frequency of the external signal. The multiple is defined by the setting of the frequency divider. For this application PC2 is recommended as it does not lock at harmonics.

Example: Setting the A-163 to a dividing factor 5 causes the fivefold frequency at the VCO output of the A-196 compared to the frequency of the external signal fed into input 2 of the PC (multiple A-180 at the VCO out of A-196 required, not shown in fig.2).

Using the A-163 consequently leads to a voltage controlled frequency multiplication. Modulating the A-163 dividing factor passes through several *pseudo-harmonics*, "pseudo" as the waveform of the A-196 VCO is rectangle in contrast to real sine shaped harmonics.

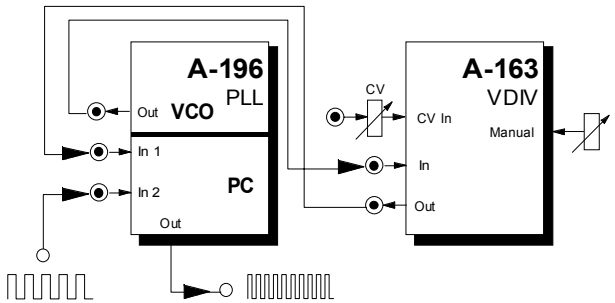

Fig. 2: Frequency multiplication with A-163

Grafic VCO

Frequency multiplication can be used to generate the **clock signal for a graphic VCO**. For this e.g. the A-155 can be used even though it is equipped with rotary controls instead of faders as usual for graphic VCOs.
For this the Clock input of the A-155 is connected to the A-196 VCO output. The frequency of an external VCO (e.g. A-110) is multiplied with the A-196 by 8 - as the A-155 has 8 steps. The waveforms of the audio signals that appear at the two Pre-Outputs of the A-155 can be adjusted with the analog controls of the A-155 like a graphic VCO. The audio frequency is identical to the controlling "master" VCO (e.g. A-110).

A very interesting variant of this patch is the usage of the 8 external inputs of the lower A-155 row. Connect these inputs to 8 different automatically changing control voltages (e.g. LFO A-145/146/147, ADSR A-140/141/142, Random voltages A-118/A-149-1, morphing controller A-144) or even audio signals. Automatically varying waveforms will appear.

Another application is the generation of clock signals for **switched capacitor filters (SCF)**. For these types of filters the filter frequency is defined by the frequency of an external clock signal. So far no filters of this type are available as A-100 modules but we are about to experiment with SCFs.

The A-196 is a very **experimental module** and some of its functions cannot be described straight forward as for other modules. Rather the user should try out the possibilities by trial and error.

E.g. the frequency jitter (i.e. actually too high LP frequency for optimal PLL operation) or frequency slew (i.e. actually too low LP frequency) can be used intentionally to obtain certain effects.

Even the upper frequency limits of the VCOs can be used on purpose ("frequency clipping").

Usually the three phase comparators behave completely different within the same patch so that this peculiarity leads to additional sound experiments.

More patches and audio examples can be found on our web site www.doepfer.com on the A-196 info page.

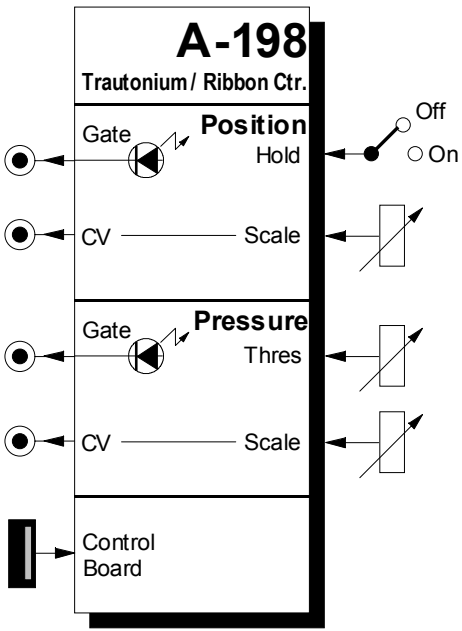

1. Introduction

Module **A-198** is a so-called **Trautonium** resp. **Ribbon Controller**. It provides variable Control Voltages and Gate signals generated by combined **position / pressure sensor**. The controlling element of the A-198 is a **linear position sensor** (length about 50 cm) that has available a **pressure sensor** too.

Touching the sensor with a **finger** generates a **Control Voltage** that is **proportional to the position of the finger.** The **Scale** - i.e. the relation between position difference and voltage difference - is **adjustable** with a potentiometer at the front panel. A **Hold** switch is used to determine if the CV voltage is held after removing the finger or if the voltage jumps to 0V. In the last case (Hold = off) a **Gate** signal is derived from the CV voltage whenever a finger touches the sensor (e.g. for triggering an Envelope Generator / ADSR).

A **pressure sensor** made of conductive rubber arranged below the position sensor generates a **second Control Voltage** that increases with higher pressure of the finger. Even for this CV the **Scale** is **adjustable**. A **second Gate** signal is triggered as soon as the pressure exceeds a certain value. The **Gate Threshold** is **adjustable** at the front panel.

2. Overview

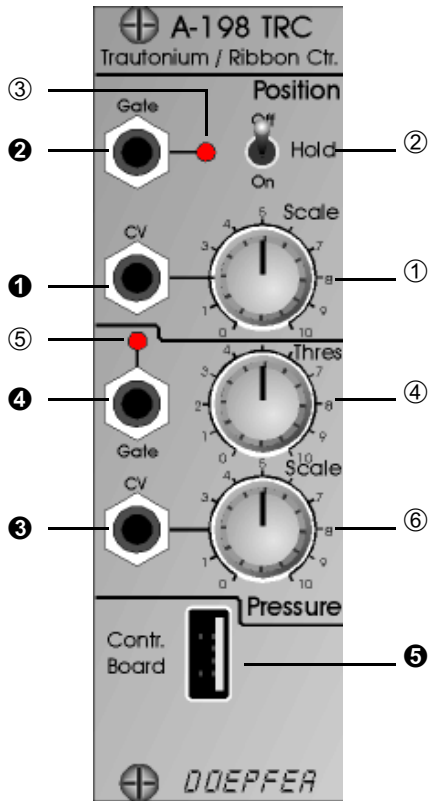

Controls:

① **Scale** : Scale / spread control for Position Control Voltage output ❶

② **Hold** : Hold function switch

③ **LED** : Gate signal indicator for Position Gate at output ❷ (active only if Hold = off)

④ **Thres** : Threshold control for Pressure Gate signal at output ❹

⑤ **LED** : Gate signal indicator for Pressure Gate at output ❹

⑥ **Scale** : Scale / spread control for Pressure Control Voltage output ❸

In / Outputs:

❶ **CV** : Position Control Voltage output

❷ **Gate** : Position Gate output (active only if Hold = off)

❸ **CV** : Pressure Control Voltage output

❹ **Gate** : Pressure Gate output

❺ **Contr. Board**: Connector for manual (USB type)

⚠ **Do not connect USB devices to this socket!**

3. Controls

① Scale

The position sensor of the A-198 is in principle a linear potentiometer that is activated whenever a finger touches the sensor. Consequently the **relation** between the **position of the finger** and the **Control Voltage CV_{POS} is linear** too (see fig. 1).

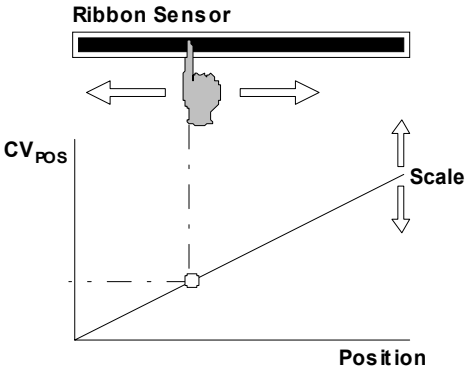

Fig. 1: Connection between position, Control Voltage CV_{POS} and Scale

The **Scale**, i.e. the connection between position difference and voltage difference, is adjusted with control ① (see fig. 1).

If CV_{POS} is used to control the VCO pitch the scale is adjusted with control ① so that the position difference corresponds to the desired spread, e.g. 25 cm for one octave.

② Hold

This switch determines the **behaviour** of the position control voltage CV_{POS} if the **finger is removed** from the sensor:

Off : CV_{POS} drops to 0V and the **Gate** output ❷ turns from high to low. This is the same mode that was available in the Trautonium.

On : The last control voltage before the finger was removed is held with an internal S&H circuit. In this mode the **Gate** function at output ❷ is not active (Gate is permanently high). This mode was not available in the Trautonium.

In the Off position of the Hold switch the control voltage CV_{POS} drops to 0V as soon as the finger is removed. If the Gate output ❷ is used to trigger an Envelope Generator (e.g. A-140, A-141), that controls the loudness of a VCA or the timbre of a VCF, the Release time of the Envelope Generator should be set to zero so that the dropping tone is muted. This is identical to the behaviour of the Trautonium. Even for

the Trautonium the sound disappears immediately if the finger is removed (no release).

③ LED

The LED ③ monitors the **Gate** signal at output ❷ that is triggered by touching the position sensor (active only in the Off position of the Hold switch).

④ Thres

Control ④ is used to set the **Trigger Threshold** above which a Gate signal is generated (see fig. 2). Whenever the pressure control voltage exceeds the threshold the Gate output ❹ turns to high.

⑤ LED

The LED ⑤ monitors the **Gate** signal at output ❹ that is generated whenever the pressure control voltage exceeds the threshold adjusted with control ⑤.

⑥ Scale

The pressure **Scale**, i.e. the connection between pressure and the voltage $\mathbf{CV_{PRES}}$ generated at output ❸, is adjusted with control ⑥.

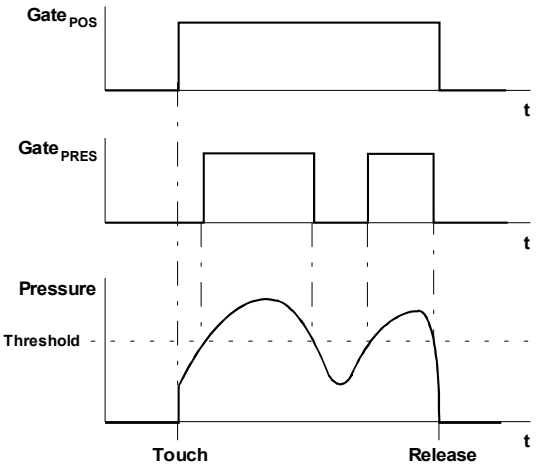

Fig. 2: Connection between the Gate signals and the finger pressure ($Gate_{POS}$ is shown for Hold = Off)

The pressure sensor is made with conductive rubber and does not work as accurate as the position sensor. The resistance of the conductive rubber changes with varying pressure and causes a variable voltage. But the coherence between pressure and resistance/voltage is not very accurate - except that an increasing pressure will cause an increasing voltage. Even some difference of the pressure sensor behaviour over the length of the manual may be possible as the conductive rubber has tolerances over this length.

4. In- / Outputs

❶ CV

The **position dependent Control Voltage CV_{POS}** is available at this output.

❷ Gate

The **position dependent Gate signal $Gate_{POS}$** is available at this output (active only in the Off position of the Hold switch).

❸ CV

The **pressure dependent Control Voltage CV_{PRES}** is available at this output.

❹ Gate

The **pressure dependent Gate signal $Gate_{PRES}$** is available at this output. Whenever the pressure control voltage exceeds the threshold adjusted with control ④ the Gate output ❹ turns to high.

❺ Contr. Board

The **position and pressure sensors** are located in a separate metal frame. The connection between the module and the sensor frame is made by a 4 pin cable (same connectors and cable as used for USB connections). Socket ❺ is used for the junction cable to the sensors. The junction cable and the metal frame that contains the sensors is included with A-198 manual.

⚠ ***It is not allowed to connect any USB device to socket ❺ ! The USB device connected to the socket and the A-198 module will be destroyed and the warranty for both devices is void !***

5. User Examples

In the first place module A-198 and the accessory position/pressure sensor is used to emulate the manual of the **Trautonium**. For details concerning the principles of the Trautonium please look at our web site www.doepfer.com or other web sites that deal with the Trautonium subject. In combination with the Subharmonic Oscillator A-113, the Trautonium Formant Filter A-104 and some other modules a complete reproduction of Oskar Sala's **Mixtur Trautonium** is possible.
Another evident application is the usage as a **manually controlled voltage source** that generates two continuously variable analog voltages and two gate signals that are derived from these voltages. Here are some typical examples:

- **CV_{POS}** as **Pitch CV** for one or more **VCO**s
  Unlike a normal keyboard - that has only certain voltages (normally 1/12 V grid) and consequently only certain frequencies (semitones) available - the A-198 manual outputs a infinitely variable voltage CV_{POS} that allows any VCO frequency, especially finger-controlled glide effects and vibratos. By means of the Quantizer A-156 it is possible to generate semitone, scale or other intervals if desired. Moving the finger up and down the position sensor arpeggio-like effects are possible.
  The gate signal **$Gate_{POS}$** that is generated whenever the position sensor is touched (hold switch in the Off position) an envelope generator (ADSR) can be triggered. The Release control of the ADSR should be set to zero (see remark on pages 3/4).
- **CV_{PRES}** as "**After Touch**"
  CV_{PRES} can be used to control the loudness of a VCA or the filter frequency of a VCF with the pressure applied to the pressure sensor while CV_{POS} drives the pitch of the VCO(s).
- **CV_{POS}** and **CV_{PRES}** as **any controller**
  Both control voltages CV_{POS} and CV_{PRES} can be used to control any parameter in the A-100 that is voltage controlled, e.g. phase or frequency shifting (A-125/A-126), panning (A-134), morphing (A-144 + A-135), pulsewidth (any VCO), LFO speed (A-147). The modulation intensity (e.g. the amplitude modulation of a VCA, frequency modulation of a VCF or VCO, pulse width modulation of a VCO) can be controlled by CV_{POS} and CV_{PRES}. For this the signal level of a LFO or VCO is controlled by a VCA whose control voltage is CV_{POS} or CV_{PRES}. Another application is to add another sound (e.g. noise or sampler or second VCO) dependent on CV_{PRES}.
- **$Gate_{POS}$** and **$Gate_{PRES}$** as **"Event Controller"**
  The Gate signals can be used to trigger events, e.g. starting or stopping the Analog/Trigger Sequencer A-155 or switching between sound sources by means of the Voltage Controlled Switch A-150.

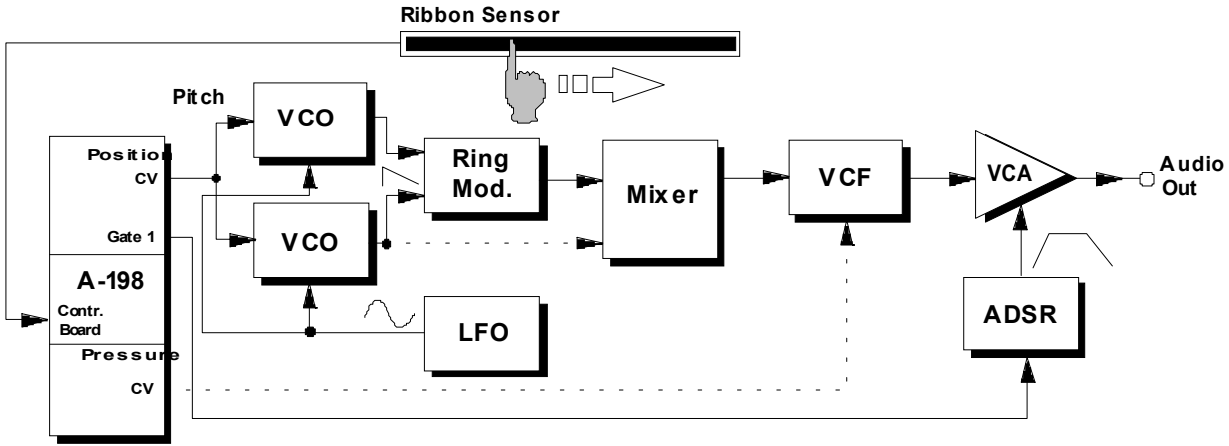

Fig. 3: “Sound of a hand passing over a wineglass”

By means of the CV-to-MIDI Interface **A-192** the output voltages of the A-198 can be converted into any **MIDI Controller** (for details see A-192 user's manual).

The patch in fig. 3 simulates the sound of a hand passing over a wineglass. The position control voltage defines the pitch of a the VCOs. The position gate signal triggers the ADSR that controls the loudness progress of the sound.

With the ring modulator and suitable settings of the mixer, LFO frequency, filter frequency and resonance the typical bell-like sound is generated. The LFO provides the vibrato. Optionally the filter frequency can be controlled by the pressure voltage.

With different settings of the mixer and the filter metallic sounds are generated. In combination with fast envelopes one obtains percussive sounds that remind of hitting or plucking a string.

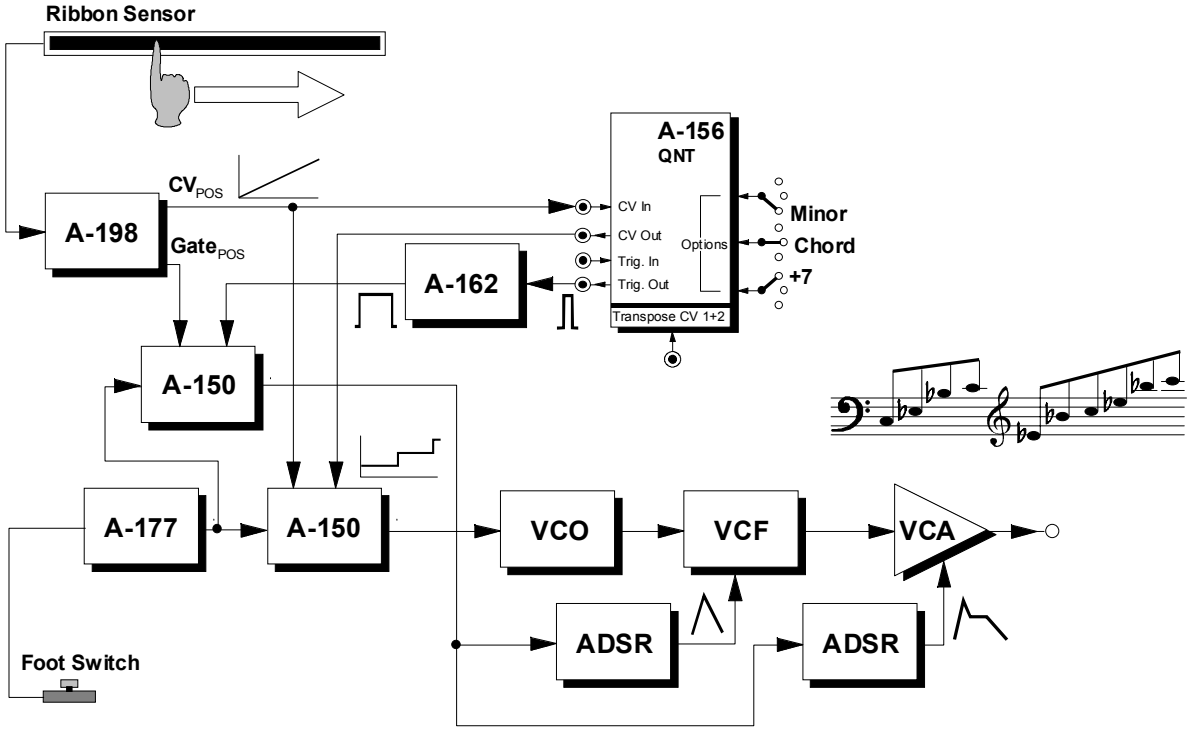

Fig. 4: A-198 as a "keyboard"

The patch of fig. 4 shows the application of the A-198 as a "keyboard". A foot switch in combination with the A-177 is used to select between quantized and non quantized operation. The first of the two voltage controlled switches of the A-150 defines if the position voltage CV_{POS} is fed directly to the VCO or if CV_{POS} is quantized with the A-156. The setting of the quantizer

determines if all semitones or only tones of the minor/ major scale or notes of a chord are allowed. For details please refer to the A-156 manual.

The second of the two voltage controlled switches of the A-150 module defines if the position gate $Gate_{POS}$ or the trigger output of the quantizer is fed to the gate input of the ADSR. Additionally a Trigger Delay A-162 is used to lengten the short trigger signal coming out of the A-156.

Summary:

- Without quantizer each touch of the position sensor generates a gate signal $Gate_{POS}$ that triggers the ADSR for filter and loudness.

- In the quantized mode the A-156 generates short trigger signals (~ 10 ms) at each new quantization. These short pulses are expanded to the desired length by means of the Trigger Delay A-162. The output of the Trigger Delay triggers the ADSR for filter and loudness.

The patch can be extendend in manifold ways:

- Feeding a keyboard or sequencer pitch control voltage to the transpose input of the quantizer (see fig. 4) transposes the sounds played on the A-198.

- Use the pressure voltage CV_{PRES} and the pressure gate $Gate_{PRES}$ for additional modulations (e.g. filter frequency, pulse width modulation, frequency modulation of VCO or VCF, VCF-ADSR or third ADSR triggered by $Gate_{PRES}$, third ADSR may be used to control modulation depth or frequency of a VCLFO for modulations).

You may add even additional controllers, e.g.

- Pitch: Position sensor (A-198) or Theremin (A-178)
- Frequency modulation (VCO): Pressure sensor (A-198)
- Filter frequency: Light controller (A-179) or Position sensor (A-198) or Pressure sensor (A-198)
- Glide on/off: Foot switch (A-177)
- Loudness: Theremin (A-178) or Foot controller (A-177)

6. Patch-Sheet

The following diagrams of the module can help you recall your own **Patches**. They're designed so that a complete 19" rack of modules will fit onto an A4 sheet of paper.

Photocopy this page, and cut out the pictures of this and your other modules. You can then stick them onto another piece of paper, and create a diagram of your own system.

Make multiple copies of your composite diagram, and use them for remembering good patches and set-ups.



- Draw in patchleads with colored pens.
- Draw or write control settings in the little white circles.

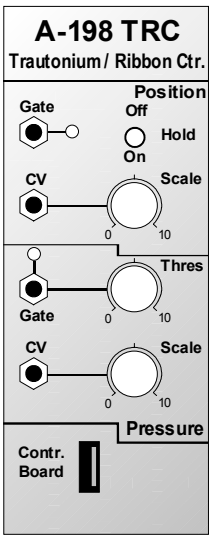

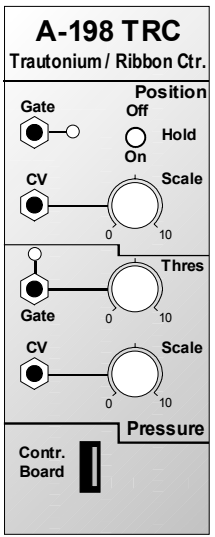



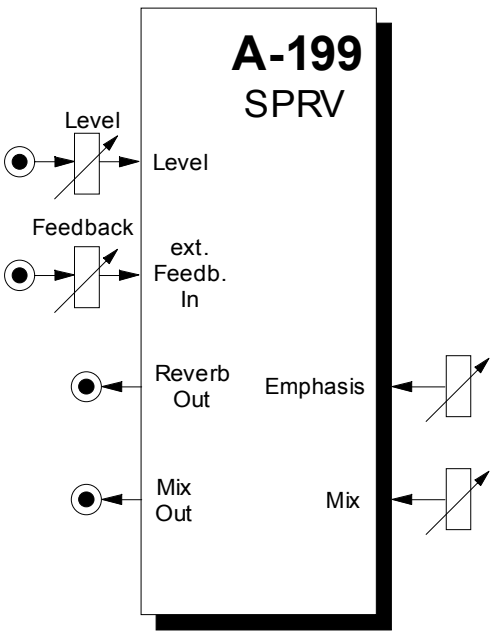

Pay attention to the power supply recommendation at the end of this manual (page 6) if you are about to plan an A-100 system that includes an A-199.

1. Introduction

Module A-199 is a spring reverb module that simulates the reverb effect by means of 3 spiral springs. The *3-spring system* used in the A-199 ensures a "dense" reverb because of the different properties of the three springs. The A-199 implies some special features that are not self-evident for spring reverb units:

The reverb signal can be fed back to the input using the *Feedback* control. Even *self-oscillation* of the springs similiar to the self-oscillation of filters is available. The feedback loop can lead even via external modules like VCA, VCF, phaser, frequency shifter, vocoder, distortion/waveshaper, ring modulator and others.

Another feature is the *Emphasis* control. This enables the adjustment of the accentuation of middle frequencies (around ~ 2kHz).

With the *Mix* control the relation between original and reverb signal appearing at the mix output is adjusted.

Using all these features very extreme and unusual effects can be generated with the A-199.

2. Overview

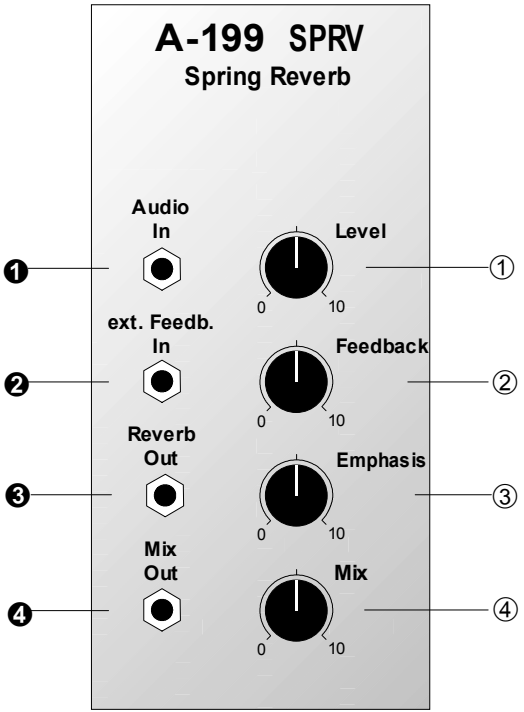

Controls:

① **Level** :	Attenuator for the the audio input signal at input ❶
② **Feedback** :	Manual feedback control, resp. attenuator for external feedback signal at socket ❷
③ **Emphasis** :	Control for accentuation of middle frequencies ~ 2kHz
④ **Mix** :	Control for setting the relation between original and reverb signal at mix output ❹

In- / Outputs:

❶ **Audio In** :	Audio input
❷ **ext. Feedback In** :	Input for external feedback
❸ **Reverb Out** :	Audio output pure reverb signal
❹ **Mix Out** :	Mix output containing both original and reverb signal (relation is adjusted with control ④)

3. Controls

① Level

Attenuator ① controls the **level of the input signal** fed into socket ❶.

② Feedback

Knob ② controls the **share of the reverb signal** that is fed back to the input. Feedback can be adjusted as far as **self-oscillation** (as for some filter modules of A-100, e.g. A-120/121/122/123). The self-oscillation behaviour depends upon the properties of the spring-system.

☞ If external feedback is used this control acts as an attenuator for the external feedback signal. In this case the reverb output ❸ is passed through one or more A-100 modules and then fed back to socket ❷ (refer to chapter 5: user examples).

③ Emphasis

This control enables the adjustment of the **accentuation of middle frequencies** (around ~ 2kHz, see fig. 1). This gives more “pressure” or “presence” to the reverb effect.

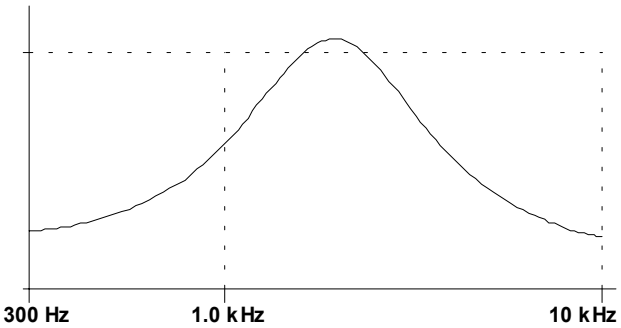

Fig. 1: Effect of emphasis function

④ Mix

This control adjusts the **relation between original and reverb signal** appearing at output ❹.

Pay attention to the notes concerning the position and assembly of the reverb system at the end of this manual.

To minimize hum noise we recommend the usage of the special A-100 power supply with ring core transformer (A-100PSU2) instead of the standard power supply.

4. In- / Outputs

❶ Audio In

The audio signal to be provided with the reverb effect is fed into **audio input ❶**.

❷ ext. Feedback In

If you want to make use of the **external feedback** feature socket ❷ is used as input for the feedback signal (refer to chapter 5: user examples).

☞ The feedback input ❷ is a normalled socket. This means that the reverb output ❸ is used as feedback signal unless a signal is patched into socket ❷. As soon as a plug is inserted into socket ❷ the internal feedback path is interrupted. Control ② is the attenuator for the internal or external feedback signal.

❸ Reverb Out

At this output the pure **reverb signal** is available.

❹ Mix Out

At this output the **mix signal** containing original and reverb signal is available (relation is adjusted with ④).

5. User examples

Apart from the evident application - i.e. reverb simulation - the module can be used for timbre modification as spring reverb systems show a very characteristic sound.

The reasons for this behaviour are (insufficient) mechanical properties of the springs like signal delays, audio resonances, limited frequency range, acoustic feedback behaviour, sensitivity to mechanical shocks and others. But just these features make the spring reverb unmistakable.

Already the controls **Feedback** and **Emphasis** allow a lot of very interesting sound modifications and unusual reverb effects.

Fig. 2 shows the realization of a **frequency-selective reverb**. By means of a filter bank (A-128) certain frequencies of the original signal are emphasized or suppressed before the signal is fed into the spring reverb module A-199. Mixing the original signal with the frequency-selective reverb signal generates very interesting sound effects.

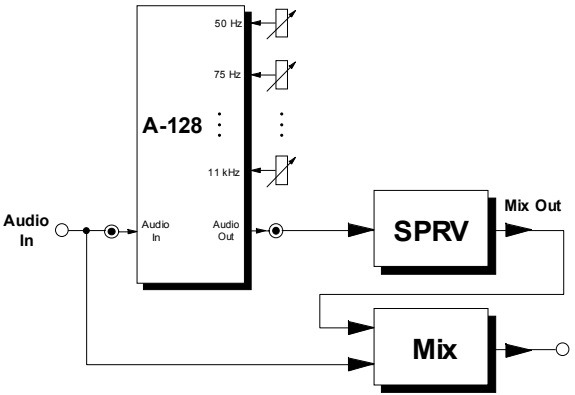

Fig. 2: Frequency-selective reverb

Another field of activity results from the **external feedback** feature (see fig. 3). Any sound-processing module or combination of such modules can be inserted into the feedback path of the spring reverb module (represented by “XYZ” in fig. 3). Examples are VCA, any filter, phaser, frequency shifter, distortion/waveshaper, ringmodulator, vocoder, audio divider and so on.

A VCA in the feedback path e.g. leads to a voltage controlled (normal) feedback. Filters or filterbanks in the feedback path modify the spectral behaviour of the reverb effect (different to the frequency-selective reverb described shortly). Very unusual sounds result from ringmodulators, frequency shifters or vocoders inserted into the feedback path of the spring reverb module.

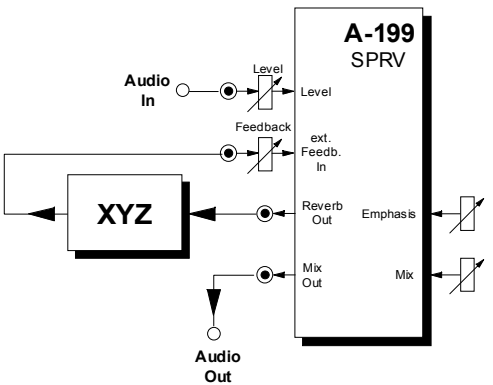

Fig. 3: External feedback

7. Position and assembly of the reverb system / Power supply recommendation

The reverb system used in the A-199 consists in principle of a transmitter ("loudspeaker") and a receiver ("microphone") that are connected via a 3-spring system. The movement of the "loudspeaker" is transmitted to the "microphone" by the springs and generate in this way the reverb effect.
The receiver ("microphone") is very sensitive to magnetic fields and has to be mounted therefore in a position with minimal interferences caused mainly by the transformer of the A-100 power supply mounted at the rear panel of the frame.
For this reason the black reverb system is connected with 2 RCA phono cables to the A-199 module. Pay attention to the colors if you disconnect the reverb system: red jack plug into red socket (labelled INPUT).
The fixed mechanical connection between pc board and reverb system used in the first A-199 modules did not stand the test.
Therefore one has to find out the best position for the reverb system creating a minimum of hum noise. As a clue the reverb system should be placed as far as possible from the transformer of the A-100 power supply (normally mounted at the lower right side on the rear panel). Normally the top left position in the frame is a good one but the rotation of the reverb system affects the hum noise too. The best position depends upon many factors and has to be found out by trial and error. It is also possible to mount the reverb system outside the A-100 frame. But we recommend this only for fixed installations of the A-100 frame.
As soon as the best position is discovered the reverb system is fixed with double-face self-adhesive tape or screws and nuts at this position. One may use the left, top, or rear panel of the A-100 frame to mount the reverb system. If screws are used 2 of them are sufficient. If necessary 2 holes have to be drilled into one of the panels. If the top or bottom cover is used the holes in the covers fit to the holes of the reverb system.
Additonally the springs of the reverb system are protected during transport with foamed plastic material. One has to remove this transportation protection before installing the module. In case that the springs stick together one has to separate them very carefully. Otherwise the module will not work correct.

As the hum noise is mainly caused by the magnetic field of the power supply transformer we recommend the usage of the special A-100 power supply with ring core transformer (A-100PSU2) instead of the standard power supply (A-100NT12) for all A-100 systems that include an A-199 module.